No. 662,617. Patented Nov. 27, 1900.

J. T. BRADFORD & A. R. GORDON.

OIL PUMP.

(No Model.) (Application filed Feb. 23, 1900.)

Fig. 1.

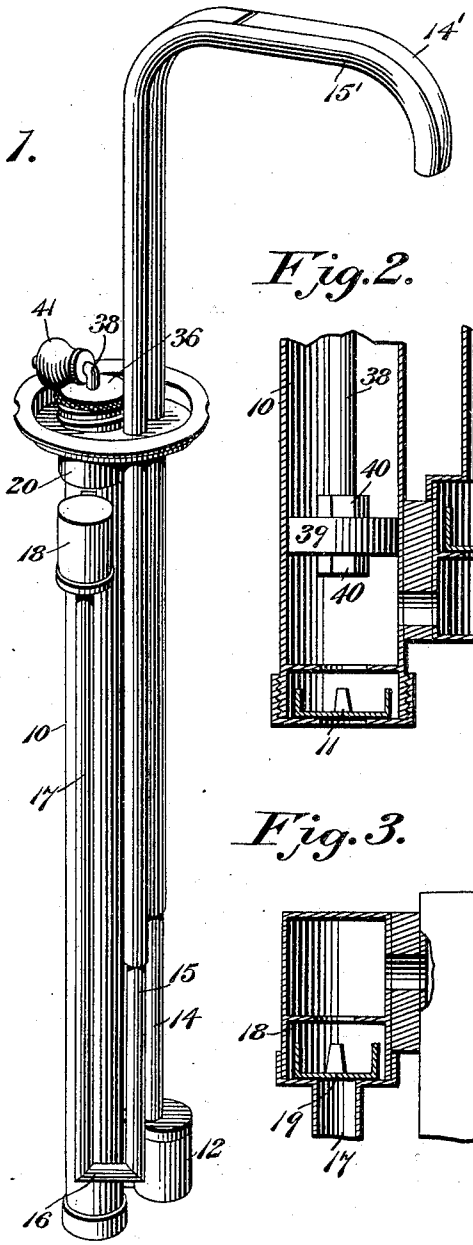

Fig. 2.

Fig. 3.

Fig. 4.

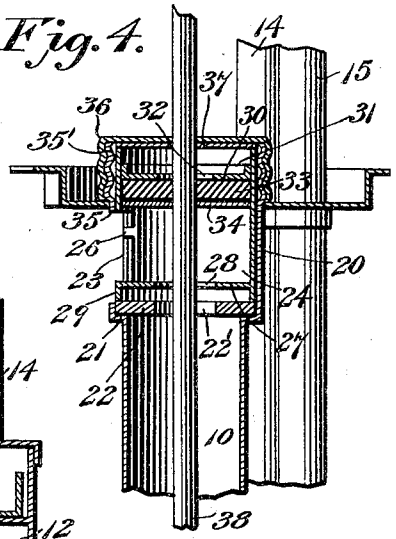

Fig. 5.

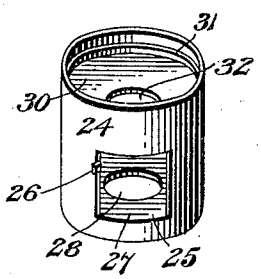

John T. Bradford and
Arthur R. Gordon
Inventors

By E. G. Siggers
Attorney

Witnesses
Edwin G. McKee
H. J. Benchoff

THE NORRIS PETERS CO., PHOTO-LITHO., WASHINGTON, D. C.

UNITED STATES PATENT OFFICE.

JOHN T. BRADFORD, OF MUNCIE, INDIANA, AND ARTHUR R. GORDON, OF DELPHOS, OHIO.

OIL-PUMP.

SPECIFICATION forming part of Letters Patent No. 662,617, dated November 27, 1900.

Application filed February 23, 1900. Serial No. 6,228. (No model.)

To all whom it may concern:

Be it known that we, JOHN T. BRADFORD, residing at Muncie, in the county of Delaware and State of Indiana, and ARTHUR R. GORDON, residing at Delphos, in the county of Allen and State of Ohio, citizens of the United States, have invented a new and useful Oil-Pump, of which the following is a specification.

Our invention relates to improvements in oil-dispensing pumps, commonly employed on oil-cans and other tanks for discharging the liquid contents thereof into a lamp or other receptacle, and the improvements are directed more especially to that type of pumps which embody means by which the surplus liquid may be returned from the lamp or vessel back to the can or tank through the continued operation of the pump, thereby overcoming all liability to filling the vessel to an overflowing condition and preventing waste of the liquid. In pumps of this character it is necessary to observe two conditions—*i. e.*, to preserve a practically air-tight connection between the cylinder and its piston, so as to exclude the admission of air to the piston-cylinder, and to insure the backward flow of liquid from the vessel through the pump and thence to the tank or can. One of our improvements is directed to attain this end by a simple and cheap construction of parts.

A further object of the invention is to provide for easy removal of the piston-rod and the piston-head from the pump-cylinder, as well as the removal of the liquid-return devices, to the end that the packings and the return-cage may be readily taken apart for renewing worn or injured parts.

Further objects and advantages of the invention will appear in the course of the subjoined description, and the novelty in the construction and arrangement of parts will be defined by the claims.

In the drawings, Figure 1 is a perspective view of an oil-pump having our improvements applied thereto. Figs. 2 and 3 are cross-sections through different parts of the pump. Fig. 4 is an enlarged vertical sectional view through the upper part of the piston-cylinder, illustrating our improvement. Fig. 5 is a detail perspective view of the return-flow cage.

The same numerals of reference are used to indicate like and corresponding parts in each of the several figures of the drawings.

The pump-cylinder 10 is provided at its lower end with a foot-valve 11, and with this cylinder communicates a chamber 12, which is provided with a check-valve 13. The eduction-pipe 14 is united to this chamber, or said eduction-pipe may be connected directly to the lower part of the cylinder and be itself provided with a check-valve. The upper end of the eduction-pipe terminates in a spout 14′, to which is connected the return-spout 15′ of the return-pipe 15, the latter arranged close to and parallel with the eduction-pipe. This return-pipe is provided at its lower end with an elbow 16, from which extends a branch 17, coupled at its upper end to a chamber 18, the latter communicating with the piston-cylinder at a point near the upper end of said cylinder. This chamber 18 is provided with a valve 19, which is arranged to work in the same direction as and in unison with the valve 11 in the lower end of the cylinder; but the check-valve 13 of the chamber 12 opens under conditions which serve to close the valves 11 19 of the cylinder and return-tube, respectively.

The pump heretofore shown and described is similar to some of the types of pumps which have been used heretofore in connection with oil-dispensing tanks; but to secure the objects of our invention we have found it desirable to enlarge the upper end of the piston-cylinder, as at 20, for the purpose of forming an annular shoulder 21, the same constituting a seat for a gasket 22, of leather, rubber, rubber fabric, or any other suitable material. The piston-cylinder is provided in the enlargement 20 and above the gasket 22 with a return-port 23, the latter opening through one side of the cylinder enlargement, so as to permit the flow of oil or other liquid from the cylinder above the piston-head therein back to the tank or can. A cylindrical cage 24 is slipped or inserted endwise into the enlargement 20 of the cylinder, and this cage is provided in one side thereof with a port or opening 25, which registers with the port 23 of the cylinder enlargement. In adjusting this cage within the cylinder enlargement it is necessary to place said cage in such position that

one edge of the port 23 in the cylinder will be engaged by a lip 26 of the cage, said lip constituting a stop to retain the cage against turning after it shall have been positioned within the enlargement 20 of the cylinder, whereby the ports 23 25 of the cylinder and cage are normally in registration. This cage is provided with a lower head 27, having a central port 28, and the lower head is adjusted within the cage, so as to form a depending rim 29, the latter adapted to bear firmly upon the gasket 22 of the cylinder. The cage is, furthermore, provided with an upper head 30, the latter having an annular flange 31 and a central opening 32. The flange 31 of the upper head is engaged frictionally with the cage, so as to hold the head tightly in place therein; but pressure may be applied to the head from the under side thereof to overcome the frictional engagement, and thereby effect displacement of the head from the cage. The top plate 35 or head of the pump is provided with a threaded nipple 35′, or the enlargement 20 of the cylinder may be extended through this top plate, so as to form the nipple. A threaded cap 36 is screwed onto the nipple, so as to engage with the upper edge of the cage 24, and by screwing the cap downwardly on the nipple the cage 24 is forced in a downward direction for the purpose of making the rim 29 press the gasket 22 tightly upon the seat 21, thereby forming an air-tight joint at the upper end of the piston-chamber around the cylinder thereof. A gasket 37 is fitted within this cap 36 to rest upon the upper edge of the cage, and said gasket is compressed between the cap and the nipple when said cap is screwed to the nipple. This piston-rod 38 passes through an enlarged opening 22′ of the gasket 22, the cage 24, and through small openings in the gasket 37 and the head of the cap 36. This piston-rod is provided with a valve 33, which is fitted friction-tight to said rod and is arranged to play therewith between the heads 27 30 of the cage. This valve is in the form of a stiff disk of rubber, leather, rubber fabric, or other suitable material, and said valve is faced on its under side with a soft packing 34, the latter adapted to be seated on the head 27 of the cage, so as to close the port 29 therein on the downward stroke of the plunger. The piston-rod is furthermore provided with a piston-head 39, which is secured detachably to the rod by the nuts 40, the latter being screwed on a threaded part of the rod, so as to engage with opposite sides of the piston-head. The upper end of the piston-rod is provided with a handle or knob 41 of any suitable character.

In the operation of the pump the piston is reciprocated so as to draw oil into the cylinder on the upstroke of the piston and to force the oil from the cylinder on the downstroke of the piston, the oil passing through the eduction-pipe and its spout into the lamp or other vessel. An accumulation of the liquid in the lamp or vessel sufficient to immerse the open ends of the spouts to the eduction-tube and the return-tube sets in operation the liquid-return mechanism of the pump, because the liquid is drawn through the pipe 15 and its branch 17 by the suction created in the pump-cylinder on the downstroke of the piston, the liquid being free to flow from the lamp or vessel through the pipe 15, its elbow 16, and the branch 17, thence through the chamber 18, past the valve 19 therein, and into the piston-cylinder above the piston-head, so that on the upstroke of the piston the liquid will flow through the enlargement 20 of the cylinder and the ports 25 23 of the cage and cylinder, respectively. To secure the efficient action of the return-flow mechanism of the pump, it is necessary to establish the suction in the piston-cylinder, and this end is attained in our invention by the construction of the cage, the gaskets, and the valve. The gasket 22 makes a tight joint around the cylinder at the upper end thereof because it is clamped in place by the cage and the cap. On the downstroke of the piston the valve 33 securely closes the upper end of the piston-chamber against the admission of air to the upper end of the piston-cylinder, the packing 34 of said valve being adapted to rest upon the head 27 of the cage. It will be observed that the suction through the return-tube 15 is established on the downstroke of the piston, and thus the valve becomes efficient in excluding air from the piston-chamber to insure the return flow of the liquid on the continued operation of the pump in the usual way.

One of the important advantages of our invention resides in the removability of the cage and the several parts associated therewith and with the piston-rod, whereby ready access can be obtained to all of the parts for the purpose of renewing and repairing the same. The cap 36 may readily be unscrewed, and the piston-rod may then be lifted, so that the piston-head will impinge the cage for the purpose of displacing the latter from the enlargement of the piston-cylinder, whereby the cage, the valve, and the cap may be removed with the piston from the pump. The nuts 40 may be unscrewed from the piston-rod and the piston-head detached therefrom, thus providing for the removal of the cage and the valve. The head 30 of the cage may be easily removed to permit the valve or its packing to be taken out of the cage itself, and either of said parts may be replaced by other fresh parts. The several elements may be reassembled easily and quickly, and they may be adjusted with facility in the pump in operative relation one to the other.

While the pump is intended primarily, as above stated, for filling lamps, it may be used for any other purpose for which it may be found suitable.

Changes within the scope of the appended claims may be made in the form and proportion of some of the parts, while their essen-

tial features are retained and the spirit of the invention is embodied. Hence we do not desire to be limited to the precise form of all the parts as shown, reserving the right to vary therefrom.

Having thus described the invention, what we claim is—

1. A pump comprising a cylinder, a removable cage therein, a gasket retained by the cage, a piston-rod, and a reciprocatory valve within the cage and operatively related to the piston-rod.

2. An oil-pump comprising a cylinder, a cage secured removably in the cylinder, a piston-rod passing through the cylinder and cage, and a valve frictionally engaging with the piston-rod and reciprocable within the cage, substantially as described.

3. In an oil-pump, the combination of a cylinder provided at its upper end with a return-port, a cage removably held within said upper end of the cylinder and likewise having a return-port which registers with the port of the cylinder, a piston-rod, and a valve fitted to said piston-rod and reciprocable within the cage, substantially as described.

4. In an oil-pump, the combination of a cylinder provided with a return-port and with an internal seat, a gasket fitted to the seat, a cage provided with a return-port and fitted within the cylinder to engage tightly with the gasket and with its port in registration with the port of the cylinder, a piston-rod, and a valve frictionally engaging with the rod and reciprocable within the cage, substantially as described.

5. In an oil-pump, the combination of a cylinder provided with a return-port and an internal seat, a gasket occupying said seat, a cage provided with a port and fitted in the cylinder to engage the gasket and with its port in registration with the cylinder-port, a cap engaging with the cage to depress the same upon the gasket, a piston-rod, and a valve reciprocable with the rod and confined within the cage, substantially as described.

6. In an oil-pump, the combination with a cylinder, and a piston-rod having a removable piston, of a cage provided with two heads, one of which is removable, and the valve frictionally engaging with the piston-rod and reciprocable within the cage between the heads thereof, substantially as described.

7. In an oil-pump, the combination of a piston-cylinder and a piston having a removable head, of a cage removably confined within the cylinder and provided with two heads, one of which is held friction-tight within the cage and is removable therefrom, and a valve frictionally engaging with the piston-rod and disposed within the cylinder for reciprocation between the heads thereof, substantially as described.

8. In an oil-pump, the combination of a cylinder provided with a return-port, a gasket therein, a cage removably secured in the cylinder, a nipple, a cap screwed to the nipple and engaging with the cage, a piston-rod, a gasket clamped between the nipple and the cap, and a valve having a packing and frictionally engaging with the piston-rod, substantially as described.

In testimony that we claim the foregoing as our own we have hereto affixed our signatures in the presence of two witnesses.

JOHN T. BRADFORD.
ARTHUR R. GORDON.

Witnesses:
JOHN W. RYAN,
JOHN J. HARTLEY.