(19) Europäisches Patentamt
European Patent Office
Office européen des brevets

(11) EP 3 617 388 A1

(12) EUROPEAN PATENT APPLICATION

(43) Date of publication:
04.03.2020 Bulletin 2020/10

(51) Int Cl.:
D06F 58/20 (2006.01)

(21) Application number: **18191839.2**

(22) Date of filing: **30.08.2018**

(84) Designated Contracting States:
AL AT BE BG CH CY CZ DE DK EE ES FI FR GB GR HR HU IE IS IT LI LT LU LV MC MK MT NL NO PL PT RO RS SE SI SK SM TR
Designated Extension States:
BA ME
Designated Validation States:
KH MA MD TN

(71) Applicant: **ELECTROLUX APPLIANCES AKTIEBOLAG**
105 45 Stockholm (SE)

(72) Inventors:
- **CAVARRETTA, Francesco**
  33080 Porcia (PN) (IT)
- **GAMBARRO, Fabio**
  33080 Porcia (PN) (IT)
- **GOBBO, Gianni**
  33080 Porcia (PN) (IT)

(74) Representative: **Electrolux Group Patents**
AB Electrolux
Group Patents
105 45 Stockholm (SE)

(54) LAUNDRY DRYER INCLUDING A HEAT PUMP SYSTEM

(57) The invention relates to a dryer (1) including

◦ a treating chamber (3) where items are introduced and treated with a process air flow;

◦ a heat pump system (30) having a refrigerant circuit in which a refrigerant can flow, said refrigerant circuit including a first heat exchanger (32) where the refrigerant is heated up, a second heat exchanger (31) where the refrigerant is cooled off, a compressor (33) to pressurize and circulate the refrigerant through the refrigerant circuit, and a pressure-lowering device; said first and/or second heat exchanger being apt to perform heat exchange between said refrigerant flowing in said refrigerant circuit and said process air; the refrigerant being a flammable refrigerant;

◦ wherein said second heat exchanger (31):

▪ is a finned tube heat exchanger comprising a tube (40) having multiple sections (41) one above the other and a plurality of fins (50);

▪ defines a total length (Lt) along a length direction (X);

▪ is divided in three portions: a central portion (60) wherein said multiple sections (41) of the tube are in contact with said plurality of fins (50), and a first and second end portions (61, 62) where said tube (40) is not in contact with the plurality of fins;

◦ and wherein a ratio between a length (Le) of the central portion in contact with the plurality of fins along said length direction and the total length has a value higher than 0.85.

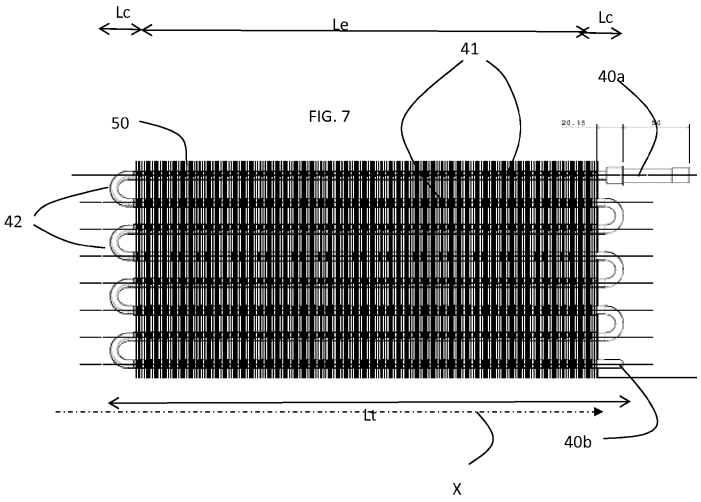

FIG. 7

EP 3 617 388 A1

Description

Technical field

[0001] The present invention relates to a laundry dryer including a heat pump system, wherein the refrigerant of the heat pump circuit includes a flammable refrigerant.

Background of the invention

[0002] The heat pump technology in a laundry dryer is at present the most efficient way to dry clothes in terms of energy consumption. In a heat pump system of the laundry dryer, a process air stream flows in a closed process air stream circuit. Further, the heat pump system includes a closed refrigerant circuit. The process air stream is moved by a main fan, passes through a laundry chamber, which is preferably formed as a rotatable laundry drum, and removes there water from wet clothes. Then, the process air stream is cooled down and dehumidified in an evaporator, heated up in a condenser and re-inserted into the laundry drum again.

[0003] The refrigerant is compressed by a compressor, condensed in the condenser, expanded in an expansion device and then vaporized in the evaporator.

[0004] Thus, the condenser and the evaporator are components of the process air stream circuit as well as of the refrigerant circuit. The condenser and the evaporator are heat exchangers between the process air stream circuit and the refrigerant circuit.

[0005] Usually, the components of the heat pump system are placed in a basement of the laundry dryer. The basement of a laundry dryer is part of a casing, which includes in addition to the basement also walls, substantially vertically supported from the basement, such as for instance a front wall and a rear wall, and lateral walls. In the casing, a drum, where the laundry is introduced in order to dry the same, is rotatably supported. In particular, the compressor, the evaporator and the condenser are arranged in said basement below the laundry drum.

[0006] Typical refrigerants used in heat pumps are Hydroflorocarbons (HFCs), such as, for example, R134a and R407C. However, the use of these refrigerants can adversely impact on global warming, as they have a high Global Warming Potential (GWP), which is a relative measure of the amount of heat trapped in the atmosphere by such refrigerants (in gas form), compared to the amount of heat trapped in the atmosphere by a similar mass of carbon dioxide.

[0007] Especially in the last years, the global warming problem has become increasingly severe, and alternative refrigerants have thus been extensively studied and employed.

[0008] As also disclosed by document EP 3 066 406 B1, hydrocarbon refrigerants, such as for example propane (R-290) and propylene (R-1270), proved to be a good alternative for replacing the above high-GWP refrigerants in heat pump dryers and washer-dryers appliances. These natural fluids have ideal thermal and physical properties, besides having a negligible GWP. However, since these alternative refrigerants are flammable and explosive, the existing regulations currently limit the maximum charge of refrigerant in laundry, so as to prevent possible issues due to leakages in the refrigerant circuit.

Summary of the invention

[0009] The Applicant has thus realized that, in addition to the choice of refrigerant, also the design of the heat exchangers, i.e. namely of the evaporator and the condenser, can severely affect energy consumption, drying efficiency and time performances. A proper configuration of the heat exchanger(s) allows achieving several benefits, such as maximizing the heat exchange between the refrigerant and the process air, reducing the pressure drop both in the refrigerant and in the process air circuit, and reducing the amount of refrigerant needed for a proper functioning of the heat pump. All these benefits allow saving energy, improve the drying efficiency and, in general, together with the choice of a refrigerant having a low GWP, allow the realization of a more "ecofriendly" dryer.

[0010] Therefore, it is an object of the present invention to provide a laundry dryer with a heat pump system having an improved design, aimed at maximizing the fraction of refrigerant charge effectively involved in the heat exchange.

[0011] Another object of the present invention is to provide a laundry dryer with a heat pump system, which allows good performance in terms of efficiency having at the same time a negligible impact on global warming.

[0012] According to an aspect, the invention relates to a dryer including:

- a treating chamber where items are introduced and treated with a process air flow;
- a heat pump system having a refrigerant circuit in which a refrigerant can flow, said refrigerant circuit including a first heat exchanger where the refrigerant is heated up, a second heat exchanger where the refrigerant is cooled off, a compressor to pressurize and circulate the refrigerant through the refrigerant circuit, and a pressure-lowering device; said first and/or second heat exchanger being apt to perform heat exchange between said refrigerant flowing

in said refrigerant circuit and said process air; the refrigerant being a flammable refrigerant,

- wherein said second heat exchanger:

  - is a finned tube heat exchanger comprising a tube having multiple sections one above the other and a plurality of fins;
  - defines a total length along a length direction;
  - is divided in three portions: a central portion wherein said multiple sections of the tube are in contact with said plurality of fins, and a first and second end portions where said tube is not in contact with the plurality of fins;

- and wherein a ratio between a length of the central portion in contact with the plurality of fins along said length direction and the total length has a value higher than 0.85.

[0013] In the following, with the term "dryer" both drying machines which dry only as well as combined washer-dryers are meant. In particular, also washer-dryers that wash the laundry, spin/centrifuge it and finally tumble dry it.

[0014] The dryer includes a "treating chamber", such as a washing and/or drying chamber (commonly called drum) where the laundry can be located in order to be washed and/or dried; the chamber can be rotated around a chamber axis during the washing and/or drying operations. Further, the dryer may be a front-loading dryer, which means that the axis of rotation of the treating chamber is positioned in a horizontal manner or slightly tilted with respect to a horizontal plane, or a top laundry dryer, where the axis of the treating chamber is substantially vertical.

[0015] In a preferred embodiment, the dryer is a front loading laundry dryer.

[0016] The dryer preferably comprises a casing preferably including a front wall, a rear wall, side walls, top wall and a base section or basement. The front or top wall may comprise a user panel to command the functioning of the dryer by the user. The casing defines the limit between the internal volume of the dryer and the outside to the dryer. Further, preferably, the casing includes a door hinged to the casing itself, e.g. to the front wall in case of a front loading dryer, which is openable in order to introduce the laundry in the laundry chamber, or to the top wall in case of a top loading dryer.

[0017] The basement has, among others, the function of housing several component of the dryer, such as a portion of a drying air conduit, heat exchangers, a motor for rotating the chamber, a fan, etc. Further, it has also the function of supporting some of the walls of the casing.

[0018] The basement can be realized in any material; preferably it is realized in plastic material. Further, the walls of the casing can also be realized in any material.

[0019] The basement is generally positioned on a floor and where it rests when the machine is in a standard operating condition.

[0020] The basement for example may be divided in an upper and a lower shell. The upper and lower shells define the outer boundaries of the basement, dividing a volume "inside" of the basement and an "outside" to the basement.

[0021] In a heat pump dryer, the treating chamber is part of a process air circuit, in particular for example a closed-loop air circuit in case of a condensed dryer or an open air circuit in case of a vented dryer, which in both cases includes an air duct for channelling a stream of air to dry the load. The process air circuit is connected with its two opposite ends to the treating chamber. Hot dehumidified air is fed into the treating chamber, flowing over the laundry, and the resulting humid cool air exits the same. The humid air stream rich in water vapor is then fed into an evaporator of the heat pump, where the moist warm process air is cooled and the humidity present therein condenses. The resulting cool dehumidified air is then either vented outside the appliance in the ambient where the latter is located or it continues in the closed-loop circuit. In this second case, the dehumidified air in the process air circuit is then heated up before entering again in the drying chamber by means of a condenser of the heat pump, and the whole loop is repeated till the end of the drying cycle. Alternatively, ambient air enters into the drum from the ambient via an inlet duct and it is heated up by the condenser of the heat pump before entering the drying chamber. Different circuits are known in the art in case of a washer-dryer.

[0022] The heat pump of the dryer includes a refrigerant circuit in which a refrigerant can flow and which connects via piping a first heat exchanger or evaporator, a second heat exchanger or condenser, a compressor and a pressure-lowering device. The refrigerant is pressurized and circulated through the system by the compressor. On the discharge side of the compressor, the hot and highly pressurized vapor is cooled in the condenser, until it condenses into a high pressure, moderate temperature liquid, heating up the process air before the latter is introduced into the drying chamber. The condensed refrigerant then passes through the pressure-lowering device such as an expansion device, e.g., a choke, a valve or a capillary tube. The low pressure liquid refrigerant then enters the evaporator, in which the fluid absorbs heat and evaporates due to the heat exchange with the warm process air exiting the drying chamber. The refrigerant then returns to the compressor and the cycle is repeated.

[0023] In order to compress the refrigerant, the compressor includes an electric motor which is commonly powered by a current, for example a current coming from the mains.

[0024] In order to exchange heat with the process air, the first and second heat exchangers are positioned inside the process air circuit. The process air circuit defines a bottom portion or a bottom part. The second heat exchanger is in

abutment to the bottom part or portion of the process air circuit. In the following, a "horizontal plane", which is used as a reference plane, is defined as follows. The second heat exchanger touches at least in three points the bottom part of the process air conduit. These three points defines a plane and this plane is a horizontal plane for the reference system of the present description. If there are more than three points of abutment between the second heat exchanger and the bottom part/portion of the process air conduit, then the horizontal plane is the plane that includes the majority of the points of connection.

[0025] This plane is generally really "horizontal" in the general meaning, that is, it is parallel to the floor where the dryer is put, which is commonly accepted to be "horizontal". However, there are situations in which the above-defined plane is not horizontal in the common meaning of the term, for example it is tilted (i.e. it forms an angle) with the floor where the dryer is positioned. This can happen for example because the floor is not flat and the dryer had to be adjusted, for example using standard provided "height-adjustable legs", to be stable on an uneven floor. Alternatively, the heat exchanger can be indeed positioned tilted with respect to the floor.

[0026] Preferably, said second heat exchanger is located in the basement of the dryer.

[0027] In the present invention, the refrigerant used in the heat pump circuit is a flammable refrigerant and preferably a hydrocarbon refrigerant. Although for flammable refrigerant a maximum charge limit is set by current regulations, these refrigerants have ideal thermal and physical properties for use in heat exchangers and, most importantly, they have low GWPs, which means a negligible impact on global warming.

[0028] The second heat exchanger of the invention, the condenser, is a finned tube heat exchanger comprising a tube having multiple sections one above the other and a plurality of fins. A total length of said second heat exchanger is defined along a length direction.

[0029] Finned tube heat exchangers are the most commonly used type of heat exchangers to transfer heat between a fluid (the refrigerant that flows inside the tube) and the air (the drying process air that flows through the fins and outside the tubes).

[0030] Such heat exchangers typically comprise a continuous bent tube having straight portions connected by U-bend sections, along which straight portions fins are transversally mounted. The fins are provided with holes, or apertures, having proper shape and size to allow to be assembled transversally along the continuous bent tube. Moreover, the fins are suitably designed so that a contact with proper interference is ensured between the tube and the holes of the fins. The contact between tube's portions and fins can be random and/or sporadic, due to mounting process that may alter mechanical tolerances and relative positioning of the tube and fins mounted thereon.

[0031] Alternatively, such heat exchangers may comprise individual straight tubes inserted in circular holes or apertures of transversal fins, such tubes being then expanded to provide a proper contact with interference between the tubes and the circular holes of the fins. Ends of the straight tubes are then connected in pairs by means of short U-bend sections, in order to ensure the continuity of the refrigerant circuit. The U-bend sections are typically welded or soldered to the straight tubes.

[0032] In any case, there is a plurality of tube sections, all part either of the same tube or of different separated tubes. For simplicity, the singular "tube" is used in the following to indicate both a continuous bent tube and an assembly of tubes, the latter comprising multiple straight tubes stacked one above substantially parallel to one another, and connected at their ends by suitable connecting sections, such as the aforementioned U-bend sections welded or soldered to the ends of the straight tubes.

[0033] Preferably, these tube sections are all parallel to each other. These tube's sections may correspond to the portions of the tube which are "straight", that is extending substantially along a single direction without bends or curves. Preferably, these tube's sections are horizontal, that is, they are parallel to the horizontal plane.

[0034] In both the above constructions, such finned tube heat exchangers generally comprise a central portion, for example corresponding substantially to the length of the straight tubes' sections. This central part is that part across which process air flows and where therefore heat exchange takes place between the refrigerant flowing in the tubes' sections and the process air. Further, the finned tube exchangers include lateral portions, on the two opposite sides of the central portion, comprising U-bend tube sections connecting the straight tube portions and not involved in the heat exchange (or minimally involved in it), as process air is not made to flow therethrough or only minimally.

[0035] Although such lateral portions are not useful in terms of heat exchange, they are necessary for construction reasons, as the straight tube's sections of the central portion have to be connected to ensure continuity of the refrigerant circuit.

[0036] The minimum length of the lateral portions depends on the minimum bending radius of the tubes, which in turns depends on size and flexibility of the material of the tube(s), and on the space needed for welding or soldering the U-bend sections when multiple individual straight tubes are used. According to the standard technology, for heat exchangers the length of the lateral portions (sum of the two lengths) is between 40 and 60 mm. This length is taken along a length direction, which is a horizontal direction. Further details of the length direction are given below.

[0037] In use, the whole heat exchanger is filled with refrigerant. Therefore, a fraction of refrigerant not involved in the heat exchange, namely the fraction of refrigerant flowing in the lateral portions, must be taken into account when finned

tube heat exchangers are involved. This is of particular concern when flammable and explosive refrigerants such as the aforementioned hydrocarbons are used, due to their limited maximum charge. This maximum charge might for example be fixed in regulations.

[0038] This maximum charge limit can in turn affect the drying performances of the laundry dryer, as the best performances of a conventional laundry dryer are typically observed for higher values of refrigerant charge.

[0039] The reference above defined horizontal plane allows defining two orthogonal directions: a length direction and a thickness direction. These two directions are both horizontal directions, that is, they are parallel to the horizontal plane, and forms an angle of substantially 90° among each other.

[0040] In the following, by "length direction", a horizontal direction substantially parallel to a plane containing at least two of the multiple tube sections stacked one above the other is meant to be indicated. This plane is preferably a vertical plane, that is, a plane perpendicular to the horizontal plane. In the following, thus, "length" means a measure taken along the length direction. The "thickness direction" is thus automatically defined, being perpendicular to the length direction (and still horizontal).

[0041] The second heat exchanger of the invention is thus divided in three portions: a central portion wherein said multiple sections of the tube are in contact with said fins, and a first and second end portions where said tube is not in contact with the fins.

[0042] The lengths in the length direction of the three portions -central portion, first and second end portions- are defined along said length direction of the heat exchanger, and the sum of said three lengths corresponds to the total length of the heat exchanger.

[0043] Heat exchange takes place in the central portion of the second heat exchanger between the refrigerant flowing in the multiple tube sections and the process air, flowing transversally across the tubes and substantially parallel to the fins, the end portions being provided only to connect said multiple tube sections of the central portion, so as to ensure continuous flow of the refrigerant in the circuit. Such end portions are not provided with fins since process air is not intended to be flown in these areas, so that no heat exchange between refrigerant and air takes place in end portions.

[0044] Advantageously, according to the invention, a ratio between a length of the central portion in contact with the fins along said length direction and the total length also taken along the length direction has a value higher than 0.85.

[0045] The volume of refrigerant flowing in each of the three portions of the second heat exchanger is proportional to a length of each portion along said length direction. Therefore, by providing a greater length of the central portion relative to the total length of the heat exchanger, the ratio of the volume of refrigerant flowing in the central portion -actively involved in the heat exchange- to the total volume of refrigerant flowing in the second heat exchanger is also maximized. The ratio of the volume of refrigerant flowing in the end portions, -not involved in the heat exchange- is reduced. This provision is of a crucial importance when, as in the claimed invention, a flammable refrigerant is used, the maximum charge of which is limited to a relatively small amount in a laundry dryer. Therefore, a higher amount of refrigerant is available in the heat exchanger for heat exchange purposes.

[0046] Preferably, said second heat exchanger is a coil heat exchanger and the tube in said end portions includes bends. In this embodiment, the end portions are particularly shaped as U-bend tube sections.

[0047] Preferably, said tube has an external diameter comprised between 4 mm and 10 mm. More preferably, it is comprised between 5 mm and 8 mm. The upper value of such size interval is advantageously selected to limit the inner volume of the tubes of the second heat exchanger so that, for a same amount of refrigerant, a higher density of refrigerant circulating within the tubes is obtained, which in turns increases the cooling capacity of the second heat exchanger and reduces the occurrence of pressure losses when low charges of refrigerator are involved. The lower limit, on the other end, is provided to ensure a minimum acceptable cooling capacity of the heat exchanger. The inner volume of the tube refers to the following. The volume in issue is only the volume included in the central portion of the second heat exchanger (= sum of the inner volumes of all portions of tube included in the central portion of the second heat exchanger). The inner volume can be measured as:

$$\text{Inner volume} = \text{external volume} - \text{volume occupied by the external wall of the tube}$$

$$\text{External volume} = (\text{surface of the tube's cross section}) \times (\text{length of each tube's portion}) \times (\text{number of tube's portions}) = S \times Le \times Nt$$

[0048] In case of a round tube the surface of the tube's cross section is S = (radius of the tube)^2 x π. As the surface, the whole surface including the external wall of the tube is considered (i.e. external surface).

[0049] Preferably, the number Nt of tube's sections is comprised between 20 and 70.

[0050] Preferably the thickness of the tube (that is, the thickness of the external wall of the tube) is comprised between 0.2 mm and 0.8 mm.

[0051] In case of a round tube, preferably the external diameter of the tube is comprised between 4 mm and 10 mm.

[0052] Preferably the length of the tube's portion (length of the tube in the central portion) is equal to: Le > 200 mm, preferably Le > 250 mm, more preferably Le > 280 mm, even more preferably Le > 300 mm.

[0053] Preferably, the dryer comprises a process air circuit including said treating chamber, and a basement where said heat pump is located, the process air circuit including a basement portion comprising a process air conduit where the first and second heat exchangers are positioned, wherein said central portion of said second heat exchanger is completely contained in said basement process air conduit. The whole central portion of the condenser is thus used for heat exchange, using the maximum available heat exchange surface.

[0054] Preferably, said flammable refrigerant preferably includes propane or propylene. Propane and propylene are highly efficient natural refrigerants with the lowest levels of harmful emissions.

[0055] Preferably, said length direction is substantially perpendicular to a main direction of flow of said process air when passing through said second heat exchanger. In this embodiment, the second heat exchanger has therefore a so-called "cross-flow configuration", particularly suitable for low-pressure applications such as laundry dryers, and in general when a large volume flow of vapor is involved and a low-pressure drop is required. Moreover, this configuration allows a reduced size of the heat exchanger.

[0056] Preferably, the second heat exchanger defines a thickness along a thickness direction, said thickness direction being substantially perpendicular to said length direction, and wherein the thickness is comprised between 40 mm and 150 mm. After a certain thickness, there are no significant improvement in the overall efficiency of the heat pump, because pressure drops become significative. Therefore, the selected range is a compromise between a "small" heat exchanger so that little refrigerant is used, and a good heat exchange.

[0057] Preferably, in such case, the sum of the second heat exchanger length and thickness of the central portion is comprised between 300 mm and 400 mm. In other words, a proper combination of length and thickness of the heat exchanger achieves the best efficiency of the heat exchanger. More preferably, given a length Le and a thickness t of the central portion, the following relationship between length Le and thickness t of the central part (i.e. Le and t refer to the central finned portion) of the second heat exchanger are preferred:

- Le>350 mm and t <50 mm, or
- Le>300 mm and t <70 mm, or
- Le>280 mm and t < 100 mm.

[0058] Preferably, said tube is realized in copper, aluminum or a combination of the two. These materials have excellent thermal conductivity, besides having good properties of thermal expansion, resistance to internal pressure, corrosion resistance and fatigue strength. Preferably, the tube is realized in aluminum or one of its alloys. Because of mechanical characteristics of Cu and Al, to ensure similar mechanical resistance, the wall thickness of the Al tube is higher than Cu tube. This means that if the external diameter of Cu and Al tube is the same, the internal diameter of Al tube is lower than Cu one. Considering the cost of raw material, there is an economical advantage of using Al tube instead of Cu tube heat exchangers, despite the higher amount of material. A low internal diameter means a low inner volume of heat exchangers and this is particularly helpful in case of flammable refrigerant where the charge quantity is limited.

[0059] The inner diameter reduction, keeping same number of pipes' sections and length of the heat exchangers can be achieved also by reducing the external diameter of the tube, not only with increasing the thickness of the wall. A high external diameter tube however increases the turbulence of the air flowing through the exchanger. This high turbulence increases the heat exchange coefficient of the air improving the heat amount exchanged by the exchanger.

[0060] Therefore, given an external diameter, it is better to reduce the overall inner volume using Al pipes.

[0061] In a preferred embodiment, the ratio between the length of the central portion in contact with the fins along said length direction and the total length has a value higher than 0.86, more preferably higher than 0.88.

[0062] Preferably, the total length of the second heat exchanger is smaller than 550 mm. Dryers have commonly standard accepted dimensions to be respected and this maxim length is optimal to use all the available space. For example, standard maximum dimensions of a dryer are in Europe 60 cm x 60 cm (length x thickness), while commonly the basement of the dryer is few cm smaller.

[0063] Preferably, when the dryer comprises said basement and said process air conduit, said basement comprises an upper and a lower shell, said basement process air conduit being formed by said upper and lower shells. An easy assembly of the machine is obtained.

[0064] Preferably, said first heat exchanger is a coil heat exchanger. Standard heat exchangers are preferably used

to keep the overall costs to a minimum.

[0065] Preferably, said compressor is a rotary compressor.

[0066] Preferably, the amount of inflammable refrigerant contained in said heat pump refrigerant circuit is comprised between 80 g and 300 g. More preferably, the amount of inflammable refrigerant is comprised between 100 g and 250 g. More preferably, the amount is comprised between 120 g and 200 g.

[0067] The amount of inflammable refrigerant might be set by regulations, which can also be country-dependent. The amount is relatively "low" to minimize the risk of combustion.

Brief description of the drawings

[0068] Further advantages of the present invention will be better understood with non-limiting reference to the appended drawings, where:

- Fig. 1 is a perspective view of a laundry dryer realized according to the present invention;
- Fig. 2 is a perspective view of the laundry dryer of Fig. 1 with an element of the casing removed for showing some internal components;
- Fig. 3 is a perspective view, in a disassembled configuration, of the basement of the dryer of Fig. 1 or Fig. 2;
- Fig. 4 is a perspective view of the basement of Fig. 3 with all elements contained therein removed;
- Figs. 5 is a top view of the basement of Fig. 3;
- Fig. 6 is a perspective view of a heat exchanger, detail of the dryer of figure 3;
- Fig. 7 is a front view of the heat exchanger of figure 6;
- Fig. 8 is a top view of the heat exchanger of figures 6 and 7;
- Fig. 9 is a side view of the heat exchanger of figures 6 - 8; and
- Fig. 10 is a simplified view of figure 9.

Detailed description of one or more embodiments of the invention

[0069] With initial reference to Figs. 1 and 2, a laundry dryer realized according to the present invention is globally indicated with 1.

[0070] Laundry dryer 1 comprises an outer box or casing 2, preferably but not necessarily parallelepiped-shaped, and a drying chamber, such as a drum 3, for example having the shape of a hollow cylinder, for housing the laundry and in general the clothes and garments to be dried. The drum 3 is preferably rotatably fixed to the casing 2, so that it can rotate around a preferably horizontal axis R (in alternative embodiments, rotation axis may be tilted). Access to the drum 3 is achieved for example via a door 4, preferably hinged to casing 2, which can open and close an opening 4a realized on the cabinet itself.

[0071] More in detail, casing 2 generally includes a front wall 20, a rear wall 21 and two lateral walls 25, all mounted on a basement 24. Preferably, the basement 24 is realized in plastic material. Preferably, basement 24 is molded via an injection molding process. Preferably, on the front wall 20, the door 4 is hinged so as to access the drum. The casing, with its walls 20, 21, 25, defines the volume of the laundry dryer 1. Advantageously, basement 24 includes an upper and a lower shell portion 24a, 24b (visible in Figures 3 - 5 detailed below).

[0072] The dryer 1, and in particular basement 24 is situated generally on a floor.

[0073] Laundry dryer 1 also preferably comprises an electrical motor assembly 50 for rotating, on command, revolving drum 3 along its axis inside cabinet 2. Motor 50 includes a shaft 51 which defines a motor axis of rotation M.

[0074] Further, laundry dryer 1 may include an electronic central control unit (not shown) which controls both the electrical motor assembly 50 and other components of the dryer 1 to perform, on command, one of the user-selectable drying cycles preferably stored in the same central control unit. The programs as well other parameters of the laundry dryer 1, or alarm and warning functions can be set and/or visualized in a control panel 11, preferably realized in a top portion of the dryer 1, such as above door 4.

[0075] With reference to Figure 2, the rotatable drum 3 includes a mantle, having preferably a substantially cylindrical,

tubular body 3c, which is preferably made of metal material and is arranged inside the casing 2 and apt to rotate around the general rotational axis R. The mantle 3c defines a first end 3a and a second end 3b and the drum 3 is so arranged that the first end 3a of the mantle 3c is faced to the laundry loading/unloading opening realized on the front wall 20 of the casing 2 and the door 4, while the second end 3b faces the rear wall 21.

[0076] Drum 3 may be an open drum, i.e. both ends 3a and 3b are opened, or it may include a back wall (not shown in the appended drawings) fixedly connected to the mantle and rotating with the latter.

[0077] In order to rotate, support elements for the rotation of the drum are provided as well in the laundry of the invention. Such support elements might include rollers at the front and/or at the back of the drum, as well as or alternatively a drum shaft connected to the rear end of the drum (shaft is not depicted in the appended drawings). In Fig. 2, for example, a roller 10 connected to the basement via a bracket 101a as well as a roller 10 connected to the rear wall 21 via a boss 101 is depicted. Any support element for the rotation of the drum around axis R is encompassed by the present invention.

[0078] Dryer 1 additionally includes a process air circuit which comprises the drum 3 and a process air conduit 18, depicted as a plurality of arrows showing the path flow of a process air stream through the dryer 1 (see Figures 3 and 4). In the basement 24, a portion of the process air conduit 18 is formed by the connection of the upper shell 24a and the lower shell 24b. Process air conduit 18 is preferably connected with its opposite ends to the two opposite sides of drum 3, i.e. first and second rear end 3a,3b of mantle 3c. Process air circuit also includes a fan or blower 12 (shown partially in Fig. 5).

[0079] The dryer 1 of the invention additionally comprises a heat pump system 30 including a second heat exchanger (called also condenser) 31 and a first heat exchanger (called also evaporator) 32 (see figure 3). Heat pump 30 also includes a refrigerant closed circuit (partly depicted) in which a refrigerant fluid flows, when the dryer 1 is in operation, cools off and may condense in correspondence of the condenser 31, releasing heat, and warms up, in correspondence of the evaporator 32, absorbing heat. A compressor 33 receives refrigerant in a gaseous state from the evaporator 32 and supplies the condenser 31, thereby closing the refrigerant cycle. In the following the heat exchangers are named either condenser and evaporator or first and second heat exchanger, respectively. More in detail, the heat pump circuit connects via piping 35 (see Fig. 3) the evaporator 32 via the compressor 33 to the condenser 31. The outlet of condenser 31 is connected to the inlet of the evaporator 32 via an expansion device (not visible), such as a choke, a valve or a capillary tube.

[0080] The refrigerant present in the refrigerant closed circuit of heat pump 30 is in this preferred embodiment propane.

[0081] Preferably, in correspondence of evaporator 32, the laundry dryer 1 of the invention may include a condensed-water canister (also not visible) which collects the condensed water produced, when the dryer 1 is in operation, inside evaporator 32 by condensation of the surplus moisture in the process air stream arriving from the drying chamber (i.e. drum) 3. The canister is located at the bottom of the evaporator 32. Preferably, through a connecting pipe and a pump (not shown in the drawings), the collected water is sent in a reservoir located in correspondence of the highest portion of the dryer 1 so as to facilitate a comfortable manual discharge of the water by the user of the dryer 1.

[0082] The condenser 31 and the evaporator 32 of the heat pump 30 are located in correspondence of the process air conduit 18 formed in the basement 24 (see Figure 3).

[0083] In case of a condense-type dryer - as depicted in the appended figures - where the air process circuit is a closed loop circuit, the condenser 31 is located downstream of the evaporator 32. The air exiting the drum 3 enters the conduit 18 and reaches the evaporator 32, which cools down and dehumidifies the process air. The dry cool process air continues to flow through the conduit 18 till it enters the condenser 31, where it is warmed up by the heat pump 30 before re-entering the drum 3.

[0084] It is to be understood that in the dryer 1 of the invention, an air heater, such as an electrical heater, can also be present, in addition to the heat pump 30. In this case, heat pump 30 and heater can also work together to speed up the heating process (and thus reducing the drying cycle time). In the latter case, preferably condenser 31 of heat pump 30 is located upstream the heater. Appropriate measures should be provided to avoid the electric heater to fuse plastic components of the dryer 1.

[0085] Further, with now reference to Figures 4 and 5, in the basement, the process air conduit 18 includes a duct formed by the upper and the lower shells 24a, 24b, having an inlet 19in from which process air is received from the drum 3 and an outlet 19 to channel process air out of the basement 24. Between inlet 19in and outlet 19, the duct is formed, preferably as two single pieces joined together and belonging to the upper and lower shell 24a, 24b, and including a first and a second portion 28 and 29. In the first portion 29 of this duct, seats are formed for locating the first and the second heat exchangers 31, 32. Preferably, heat exchanger 31, 32 are placed one after the other, the second heat exchanger 31 being downstream in the direction of flow of the process air the first heat exchanger 32. Further, the second portion 28 channels the process air exiting from the second heat exchanger 31 towards the basement outlet 19.

[0086] In the first portion 29 of the basement 24 thus the heat exchangers, and in particular the condenser 31, are located. The condenser 31 is in contact with the lower shell 24b of the basement 24, which forms a flat portion 29a for the abutment of the condenser. The points of contact between the basement conduit 18 and the condenser define a

plane indicated with P in figure 5. Plane P is considered the horizontal plane of reference. In this case, considering the dryer 1 positioned on a flat floor and a flat portion 29a of the basement, the horizontal plane P is parallel to the floor and it is defined by the standard (X,Y) coordinates. However plane P can be tilted with respect to the floor.

[0087] Given the P plane, a vertical Z direction can be defined, so that also vertical planes, like plane V of figure 4, can be defined as well, as planes perpendicular to plane P.

[0088] In figures 6 - 8 a detailed representation of the heat exchanger 31 or 32 is given. The heat exchanger 31, 32 comprises a tube or pipe 40 having an inlet 40a and an outlet 40b and including straight parallel sections, all indicated with 41, and bends, all indicated with 42, connecting the straight parallel sections 41 among each other. The sections 41 are one above the other, that is, some of the sections 41 lie on the same vertical plane. The heat exchanger 31, 32 therefore defines several vertical planes one parallel to the other(s) connecting different groups of sections 41. In the same manner, several sections may lie on the same horizontal plane, i.e. a group of sections lie on a plane parallel to the P plane. The heat exchanger 31, 32 therefore defines several horizontal planes one parallel to the other connecting different groups of sections 41. The distance between two nearest-neighbour sections 41 belonging to the same horizontal plane is called the pitch of the row of sections in the same horizontal plane. The distance between two nearest-neighbour sections belonging to the same vertical plane is called the pitch of the sections in the same vertical plane. This is schematically depicted in figure 10.

[0089] Preferably, pipe or tube 40 is realized in Aluminium.

[0090] A system of coordinates can be defined using plane P, wherein the straight sections 41 are extending along the X direction. This direction is also called the "length" direction. The Y direction defines a "thickness" direction.

[0091] The bends 42 may be soldered connecting different sections 41 in different planes.

[0092] The sections 41 are surrounded by fins 50. The fins 50 are positioned perpendicularly to the straight sections 41, that is, they extend along the Y direction. They also define a pitch, that is, a distance between two nearest-neighbour fins is called the fins' pitch.

[0093] Preferably, a pitch of the fins of the evaporator is comprised between 1.8 mm and 3.3 mm. Preferably, a pitch of the fins of the condenser is comprised between 1.4 mm and 3.3 mm.

[0094] Preferably, a pitch of the tubes of the first and/or the second heat exchanger is comprised between 15 mm and 30 mm. Preferably, a pitch of rows of the tubes of the first and/or the second heat exchanger is comprised between 10 mm and 30 mm.

[0095] Fins have apertures 51 in order to accommodate the sections 41 of the pipe 40. A view of the apertures is given in the side view of figure 9. The fins 50 then are in contact with the sections 41. There is no need to have a connection between each fin 50 and each section 41.

[0096] As shown in detail in figures 6 - 8, each heat exchanger is therefore divided in three parts: a central part 60 where the fins 50 are present and the tube 40 has the straight portions 41, and two lateral portions 61, 62 at the two lateral ends of the central portion 60 free from the fins and including the bends 42.

[0097] The central portion 60 has generally the form of a parallelepiped, with a front surface 70 which is generally a vertical surface where the process air impinges and an exit surface 71, also vertical, from where the air exits. These surfaces 70, 71 are preferably perpendicular to the main flow of process air (see for example figure 10). The surfaces 70, 71 are preferably rectangular.

[0098] As visible in figure 3, only the central portion 60 is located inside the process air conduit formed in the basement 24, and more precisely in its portion 29. The lateral portions 61, 62 are external to the conduit and are only marginally invested by the process air.

[0099] In the frame of reference defined, the total length of the condenser 31, which is the total length of the condenser 31 along the length or X direction, is called Lt. This length is equal to the length of the central portion (which is generally equal to the length of each section 41) Le plus the lengths of the two lateral portions Lc. Assuming that the lengths of the two lateral portions are identical, then

$$Lt = Le + 2 \times Lc$$

[0100] For the condenser 31, Lc/Le > 0.85.

[0101] Further, in the Y direction, the heat exchangers 31, 32 defines a thickness t, which is substantially the extension of the fins 50 (assuming that all fins have the same extension) along the Y direction.

[0102] For the condenser, preferably:

$$300\ \text{mm} < Le + t < 400\ \text{mm}$$

Claims

1. A dryer (1) including

- a treating chamber (3) where items are introduced and treated with a process air flow;
- a heat pump system (30) having a refrigerant circuit in which a refrigerant can flow, said refrigerant circuit including a first heat exchanger (32) where the refrigerant is heated up, a second heat exchanger (31) where the refrigerant is cooled off, a compressor (33) to pressurize and circulate the refrigerant through the refrigerant circuit, and a pressure-lowering device; said first and/or second heat exchanger being apt to perform heat exchange between said refrigerant flowing in said refrigerant circuit and said process air; the refrigerant being a flammable refrigerant;
- wherein said second heat exchanger (31):
  - is a finned tube heat exchanger comprising a tube (40) having multiple sections (41) one above the other and a plurality of fins (50);
  - defines a total length (Lt) along a length direction (X);
  - is divided in three portions: a central portion (60) wherein said multiple sections (41) of the tube are in contact with said plurality of fins (50), and a first and second end portions (61, 62) where said tube (40) is not in contact with the plurality of fins;
- and wherein a ratio between a length (Le) of the central portion in contact with the plurality of fins along said length direction and the total length has a value higher than 0.85.

2. The dryer (1) according to claim 1, wherein said second heat exchanger (31) is a coil heat exchanger and wherein the tube in said end portions (61, 62) includes bends.

3. The dryer (1) according to claim 1 or 2, wherein said tube (40) has an external diameter comprised between 4 mm and 10 mm.

4. The dryer (1) according to any of the preceding claims, comprising a process air circuit including said treating chamber (3), and a basement (24) where said heat pump (30) is located, the process air circuit including a basement portion comprising a process air conduit where the first and second heat exchangers (31, 32) are positioned, wherein said central portion (60) of said second heat exchanger is completely contained in said basement process air conduit (29).

5. The dryer (1) according to any of the preceding claims, wherein said flammable refrigerant includes propane or propylene.

6. The dryer (1) according to any of the preceding claims, wherein said length direction (X) is substantially perpendicular to a main direction of flow of said process air when passing through said second heat exchanger (31).

7. The dryer (1) according to any of the preceding claims, wherein the second heat exchanger (32) defines a thickness (t) along a thickness direction (Y), said thickness direction being substantially perpendicular to said length direction (X), and wherein the thickness (t) is comprised between 40 mm and 150 mm.

8. The dryer (1) according to claim 7, wherein the sum of the second heat exchanger length (Le) and thickness (t) of the central portion (60) is comprised between 300 mm and 400 mm.

9. The dryer (1) according to any of the preceding claims, wherein said tube (40) is realized in copper, aluminum or a combination of the two.

10. The dryer (1) according to any of the preceding claims, wherein the ratio between the length (Le) of the central portion (60) in contact with the plurality of fins (50) along said length direction (X) and the total length (Lt) has a value higher than 0.88.

11. The dryer (1) according to any of the preceding claims, wherein the total length (Lt) is smaller than 550 mm.

12. The dryer (1) according to any of the preceding claims when dependent to claim 4, wherein said basement (24)

comprises an upper and a lower shell (24a, 24b), said basement process air conduit being formed by said upper and lower shells.

13. The dryer (1) according to any of the preceding claims, wherein said first heat exchanger (32) is a coil heat exchanger.

14. The dryer (1) according to any of the preceding claims, wherein said compressor (33) is a rotary compressor.

15. The dryer (1) according to any of the preceding claims wherein the amount of inflammable refrigerant contained in said heat pump refrigerant circuit is comprised between 80 g and 300 g.

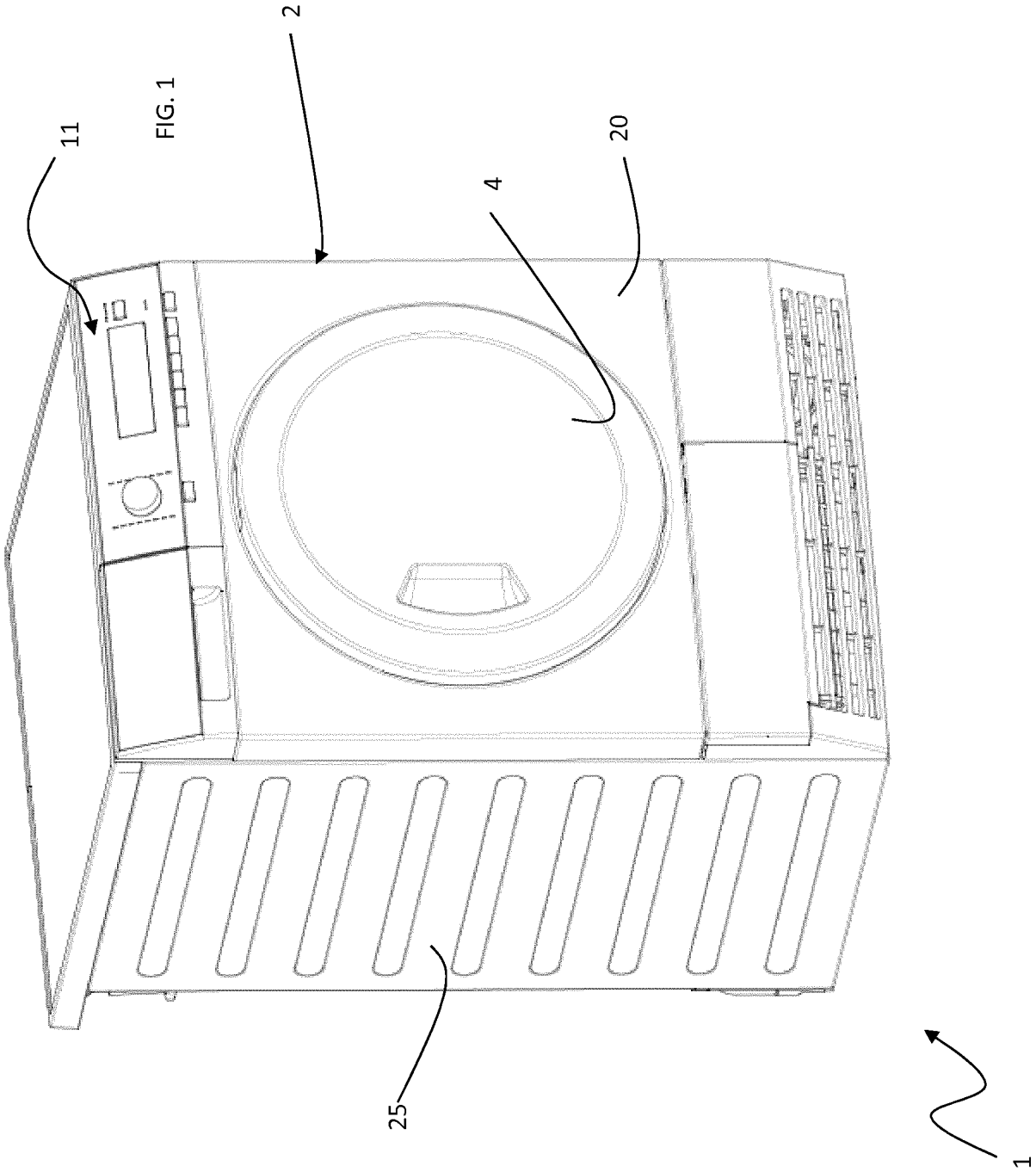

FIG. 1

FIG. 2

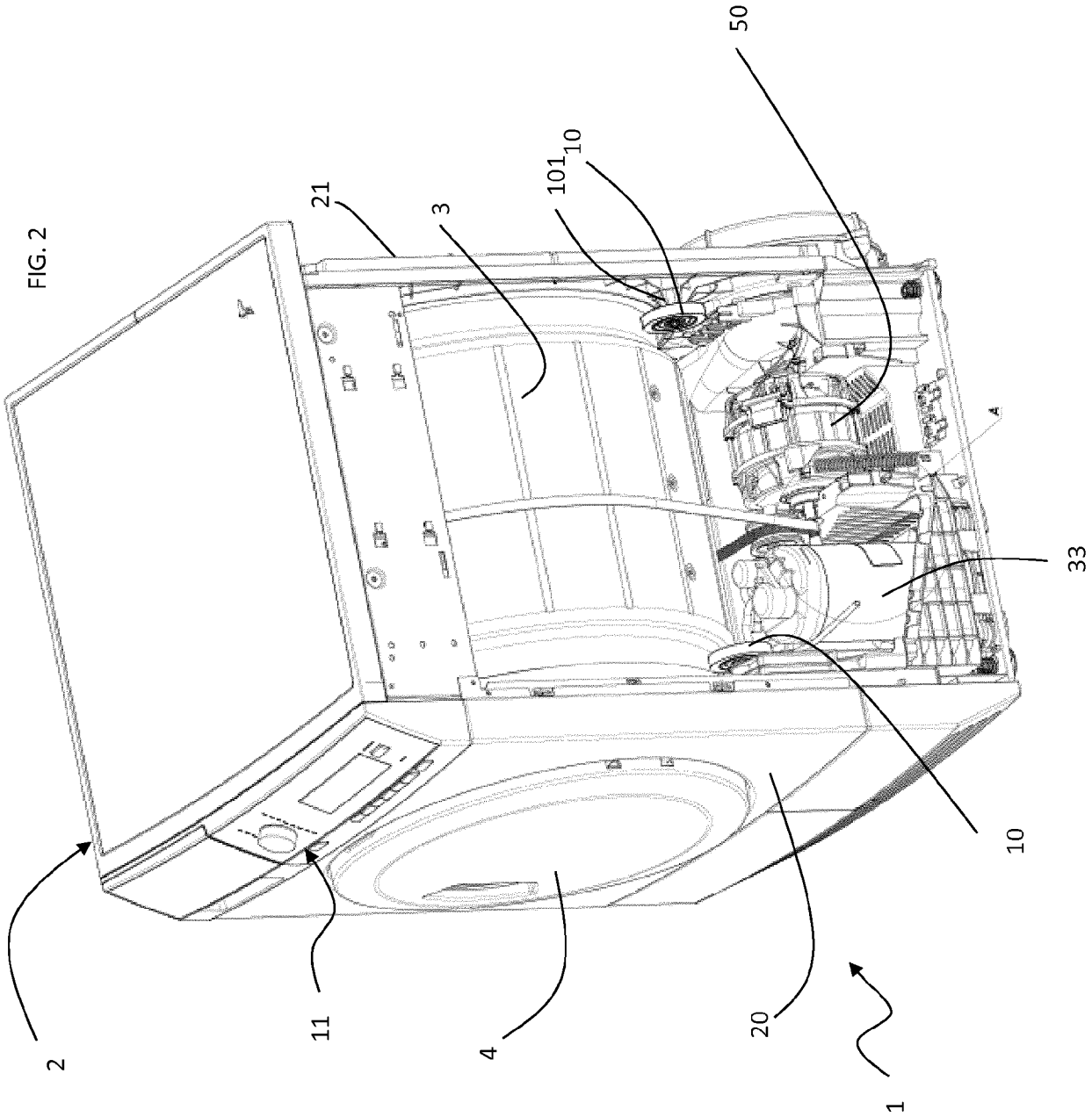

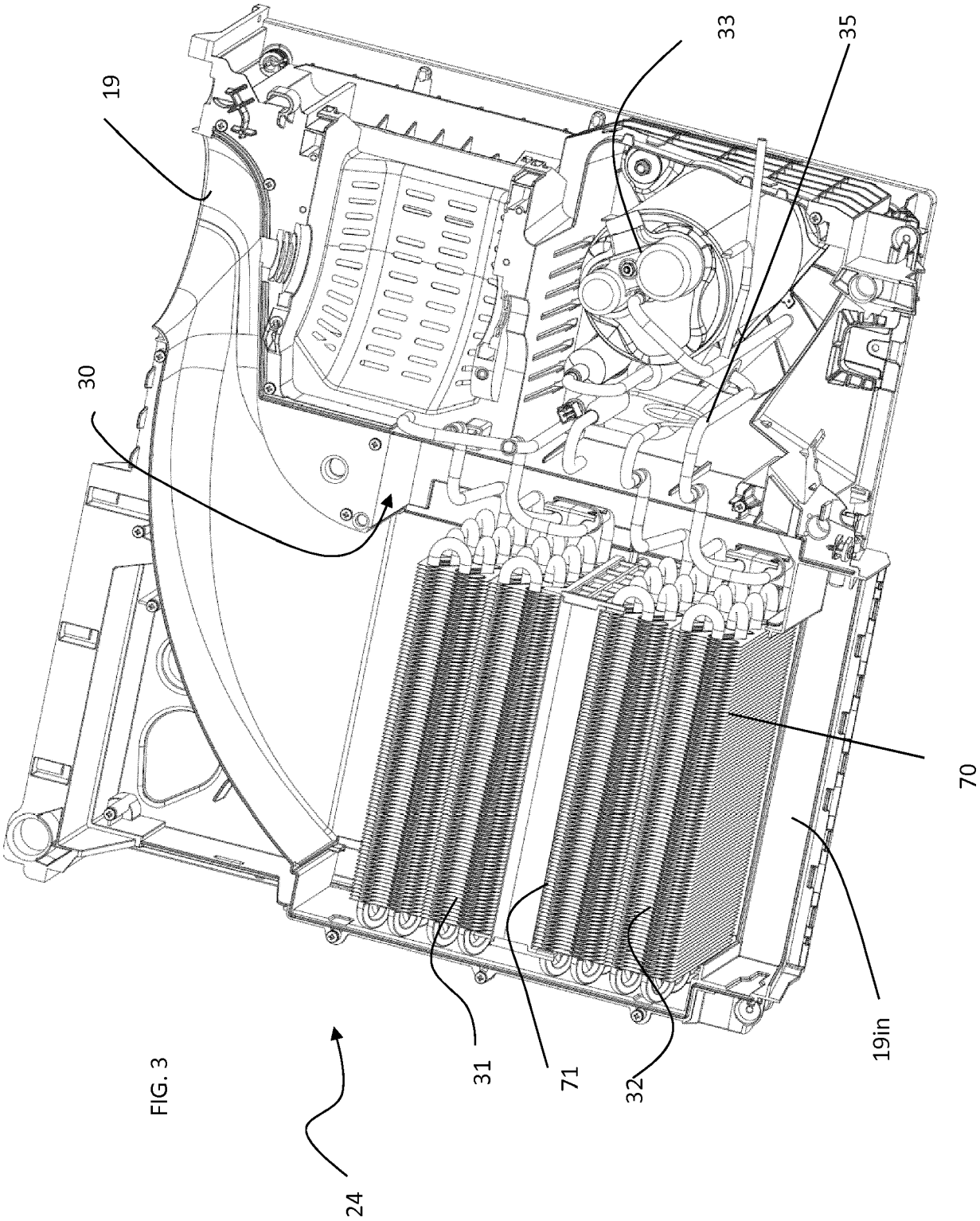

FIG. 3

FIG. 4

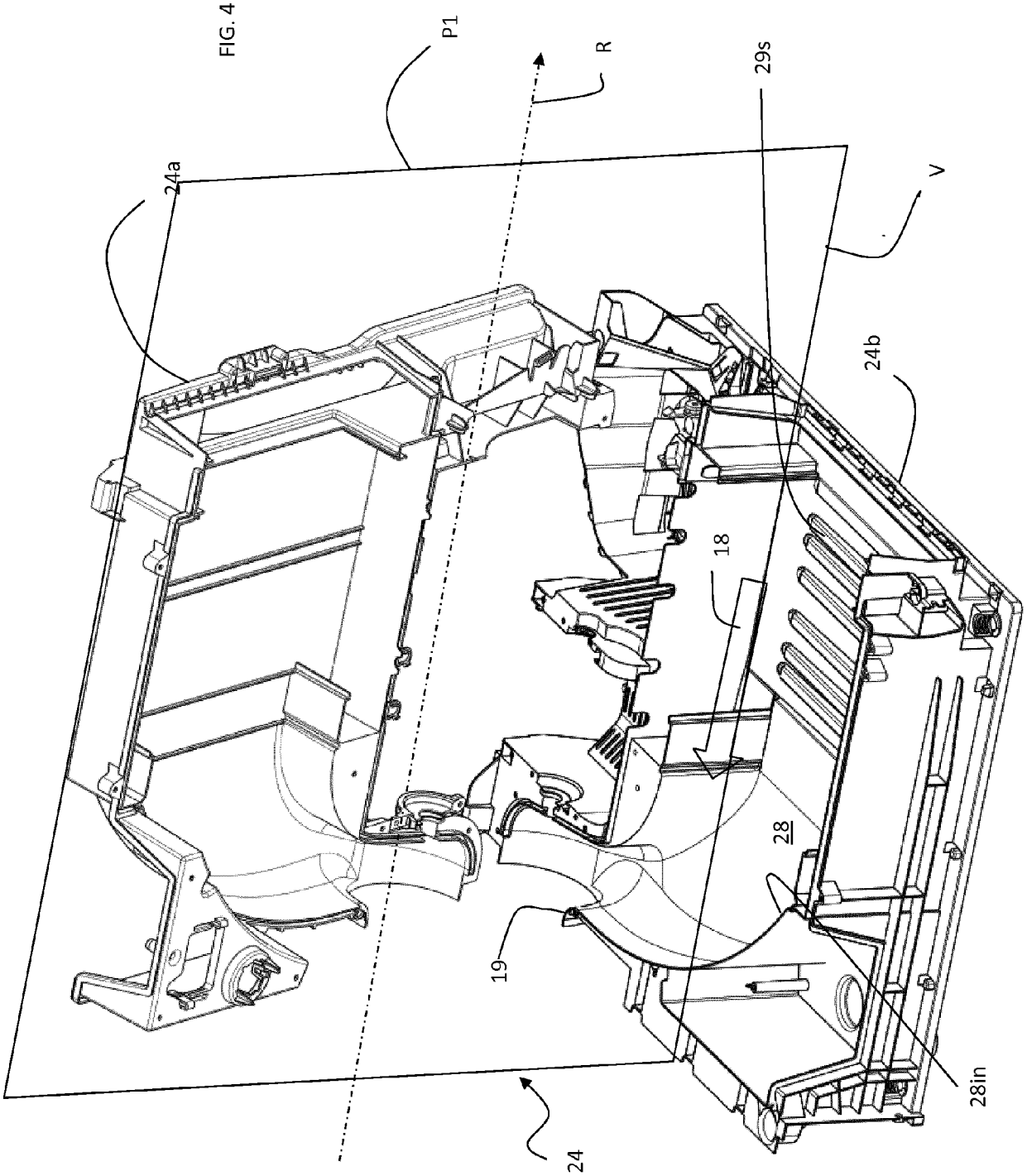

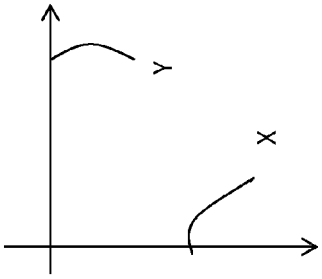

FIG. 5

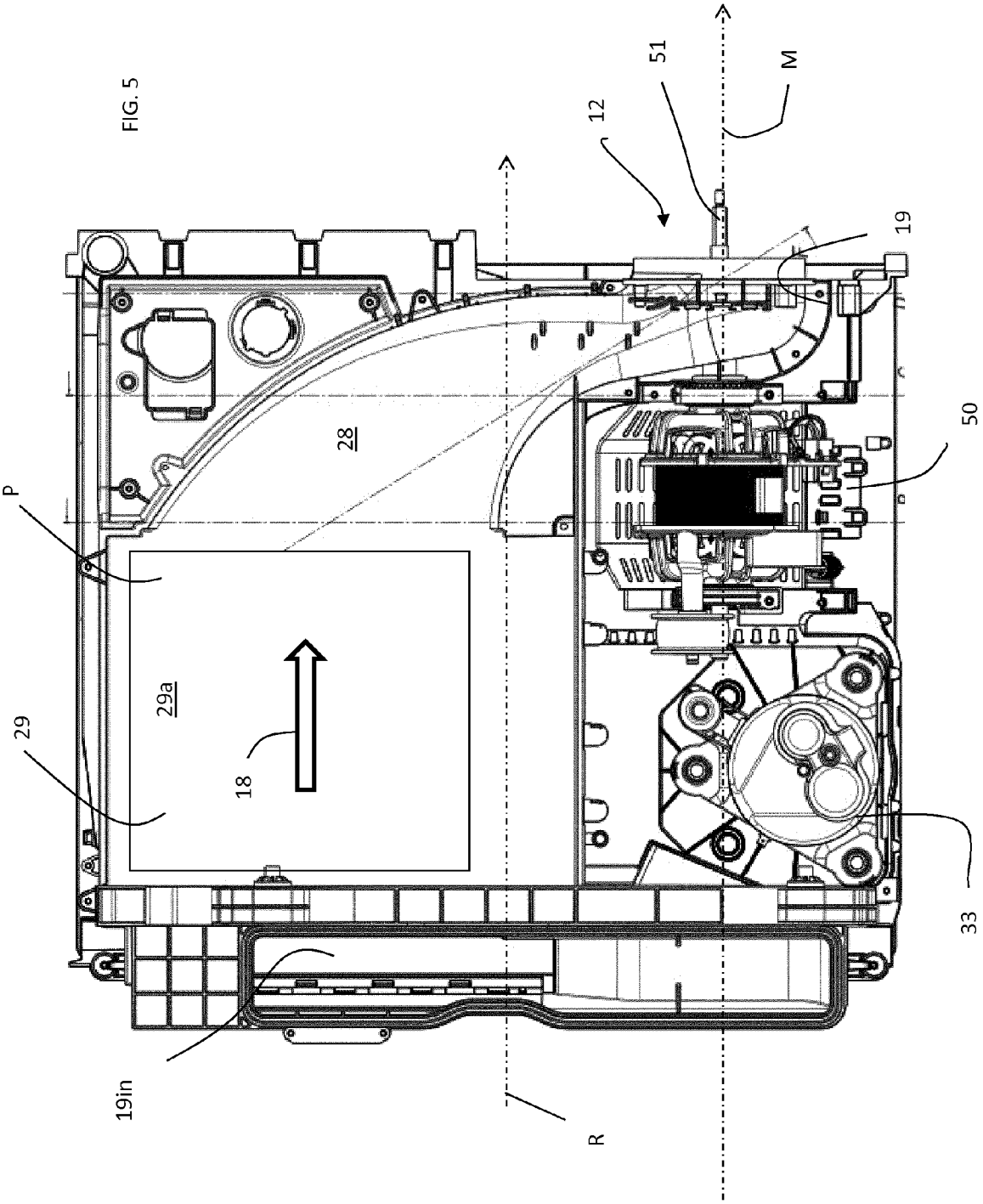

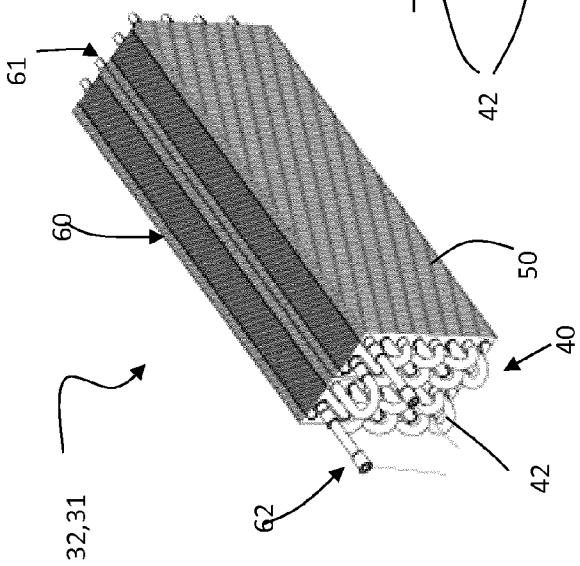

FIG. 6

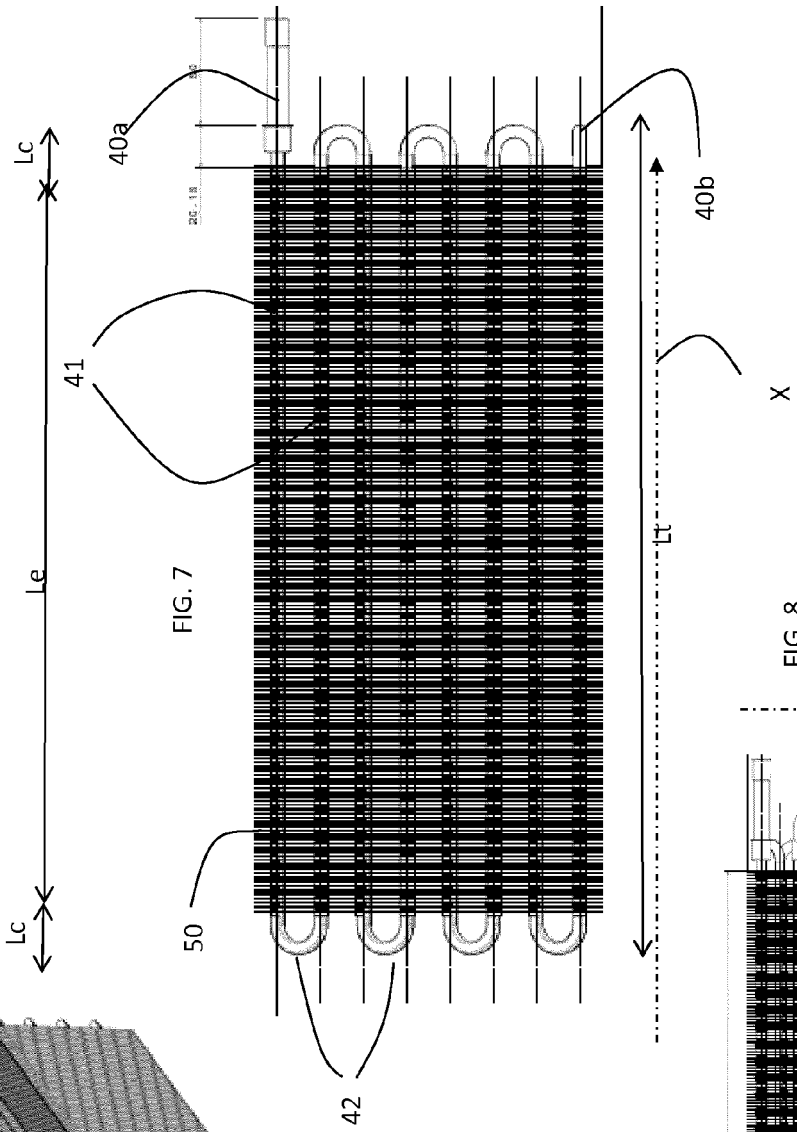

FIG. 7

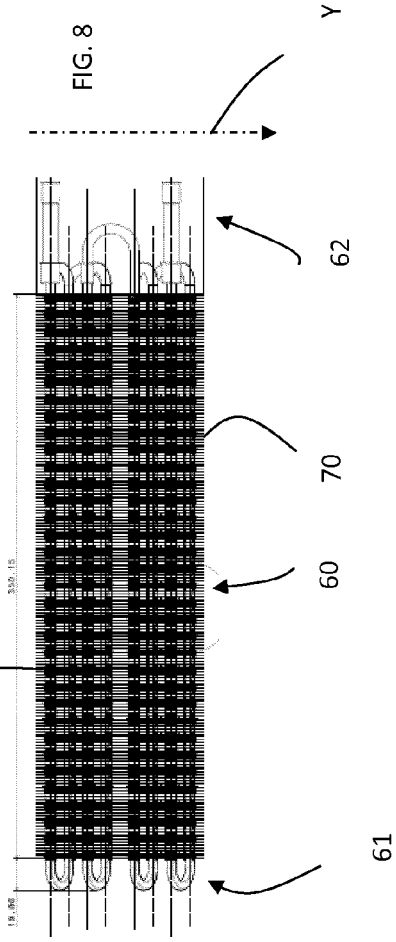

FIG. 8

FIG. 10

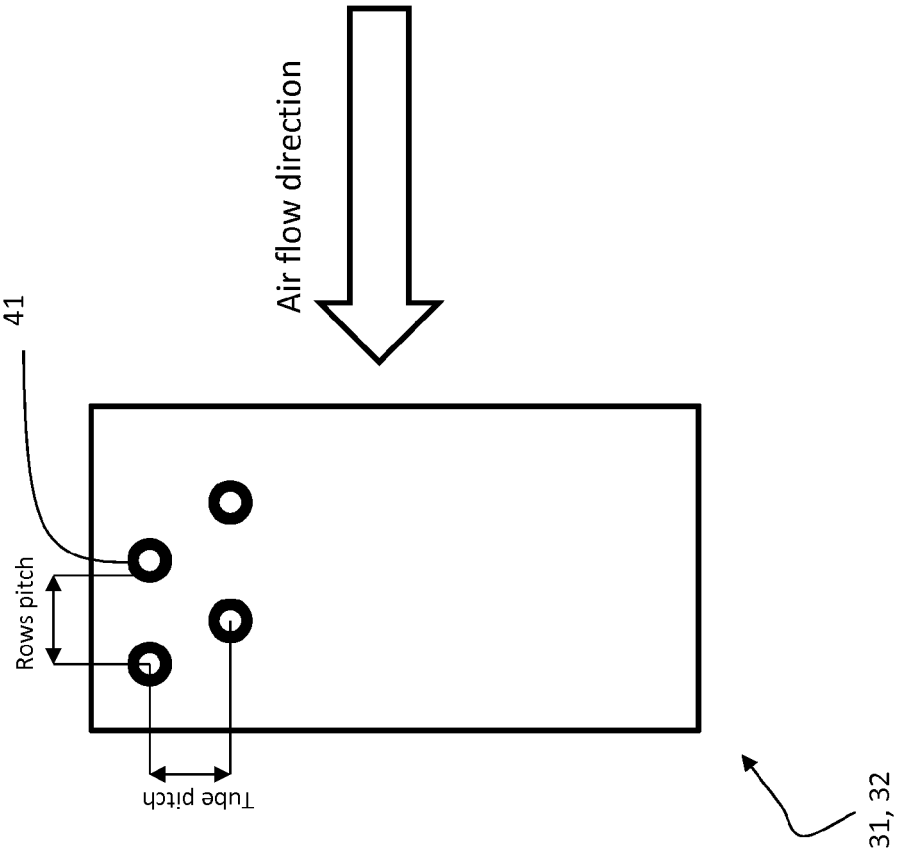
Air flow direction
41
Rows pitch
Tube pitch
31, 32

FIG. 9

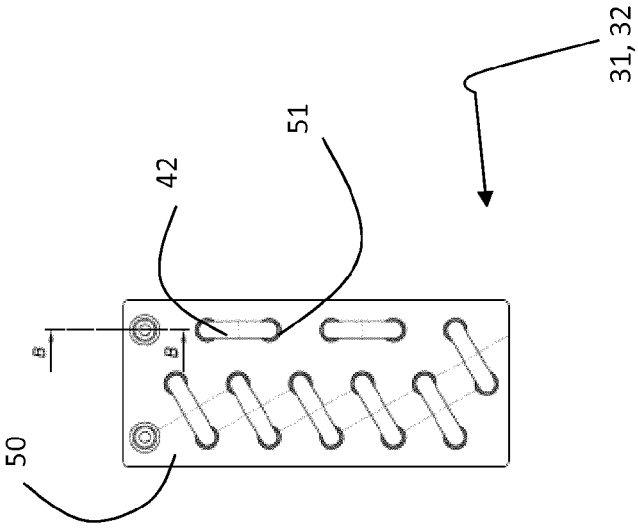
50
B
B
42
51
31, 32

Europäisches Patentamt
European Patent Office
Office européen des brevets

EUROPEAN SEARCH REPORT

Application Number
EP 18 19 1839

DOCUMENTS CONSIDERED TO BE RELEVANT

Category	Citation of document with indication, where appropriate, of relevant passages	Relevant to claim	CLASSIFICATION OF THE APPLICATION (IPC)
X,D	EP 3 066 406 B1 (BSH HAUSGERÄTE GMBH [DE]) 10 January 2018 (2018-01-10)	1-3,5,6, 9,10, 13-15	INV. D06F58/20
Y	* paragraph [0023] - paragraph [0040]; figures *	4,7,8, 11,12	

Y	WO 2014/206483 A1 (ELECTROLUX APPLIANCES AB [SE]) 31 December 2014 (2014-12-31) * page 18, line 8 - page 23, line 2; figures 2, 4a, 4b *	1,4,12	

Y	US 2011/209484 A1 (KRAUSCH UWE-JENS [DE] ET AL) 1 September 2011 (2011-09-01) * paragraph [0031]; figures *	1,7,8,11	

TECHNICAL FIELDS SEARCHED (IPC)

D06F

The present search report has been drawn up for all claims

Place of search	Date of completion of the search	Examiner
Munich	18 December 2018	Diaz y Diaz-Caneja

CATEGORY OF CITED DOCUMENTS

X : particularly relevant if taken alone
Y : particularly relevant if combined with another document of the same category
A : technological background
O : non-written disclosure
P : intermediate document

T : theory or principle underlying the invention
E : earlier patent document, but published on, or after the filing date
D : document cited in the application
L : document cited for other reasons
.....
& : member of the same patent family, corresponding document

1

EPO FORM 1503 03.82 (P04C01)

ANNEX TO THE EUROPEAN SEARCH REPORT ON EUROPEAN PATENT APPLICATION NO. EP 18 19 1839

This annex lists the patent family members relating to the patent documents cited in the above-mentioned European search report.
The members are as contained in the European Patent Office EDP file on
The European Patent Office is in no way liable for these particulars which are merely given for the purpose of information.

18-12-2018

Patent document cited in search report	Publication date	Patent family member(s)	Publication date
EP 3066406 B1	10-01-2018	CN 105705899 A	22-06-2016
		EP 3066406 A1	14-09-2016
		ES 2659046 T3	13-03-2018
		PL 3066406 T3	31-07-2018
		WO 2015068092 A1	14-05-2015
WO 2014206483 A1	31-12-2014	AU 2013396735 A1	21-01-2016
		CN 105392938 A	09-03-2016
		EP 3014010 A1	04-05-2016
		WO 2014206483 A1	31-12-2014
US 2011209484 A1	01-09-2011	CN 102232131 A	02-11-2011
		DE 102008043920 A1	27-05-2010
		EP 2358937 A1	24-08-2011
		US 2011209484 A1	01-09-2011
		WO 2010057801 A1	27-05-2010

EPO FORM P0459

For more details about this annex : see Official Journal of the European Patent Office, No. 12/82

REFERENCES CITED IN THE DESCRIPTION

This list of references cited by the applicant is for the reader's convenience only. It does not form part of the European patent document. Even though great care has been taken in compiling the references, errors or omissions cannot be excluded and the EPO disclaims all liability in this regard.

Patent documents cited in the description

- EP 3066406 B1 **[0008]**