Dec. 17, 1946. G. F. DRAKE 2,412,605

SPEED ADJUSTING MECHANISM

Filed Feb. 3, 1943 3 Sheets-Sheet 1

Fig. 1.

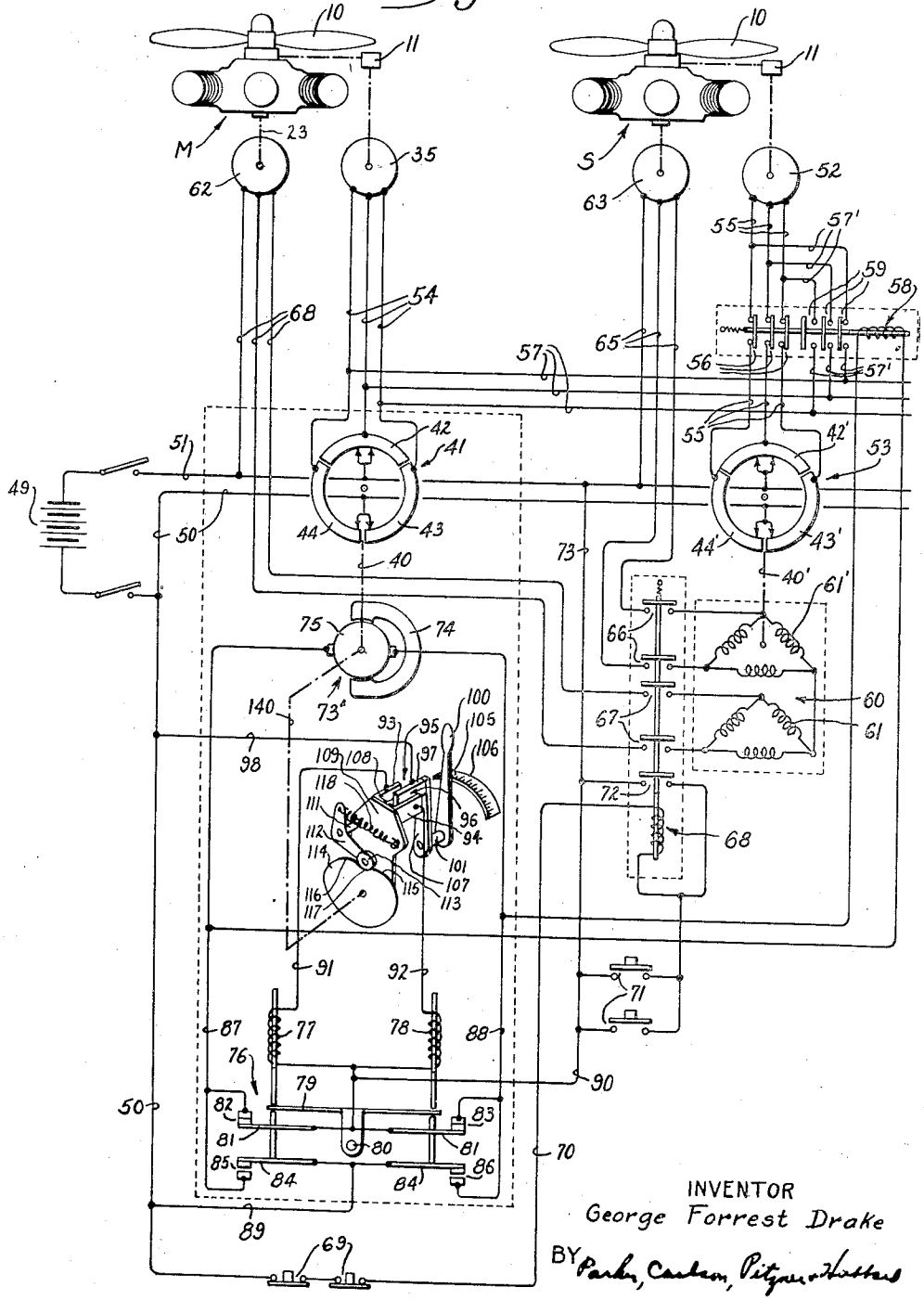

INVENTOR
George Forrest Drake

BY Parker, Carlson, Pitzer & Hubbard

ATTORNEYS

Dec. 17, 1946. G. F. DRAKE 2,412,605

SPEED ADJUSTING MECHANISM

Filed Feb. 3, 1943 3 Sheets-Sheet 2

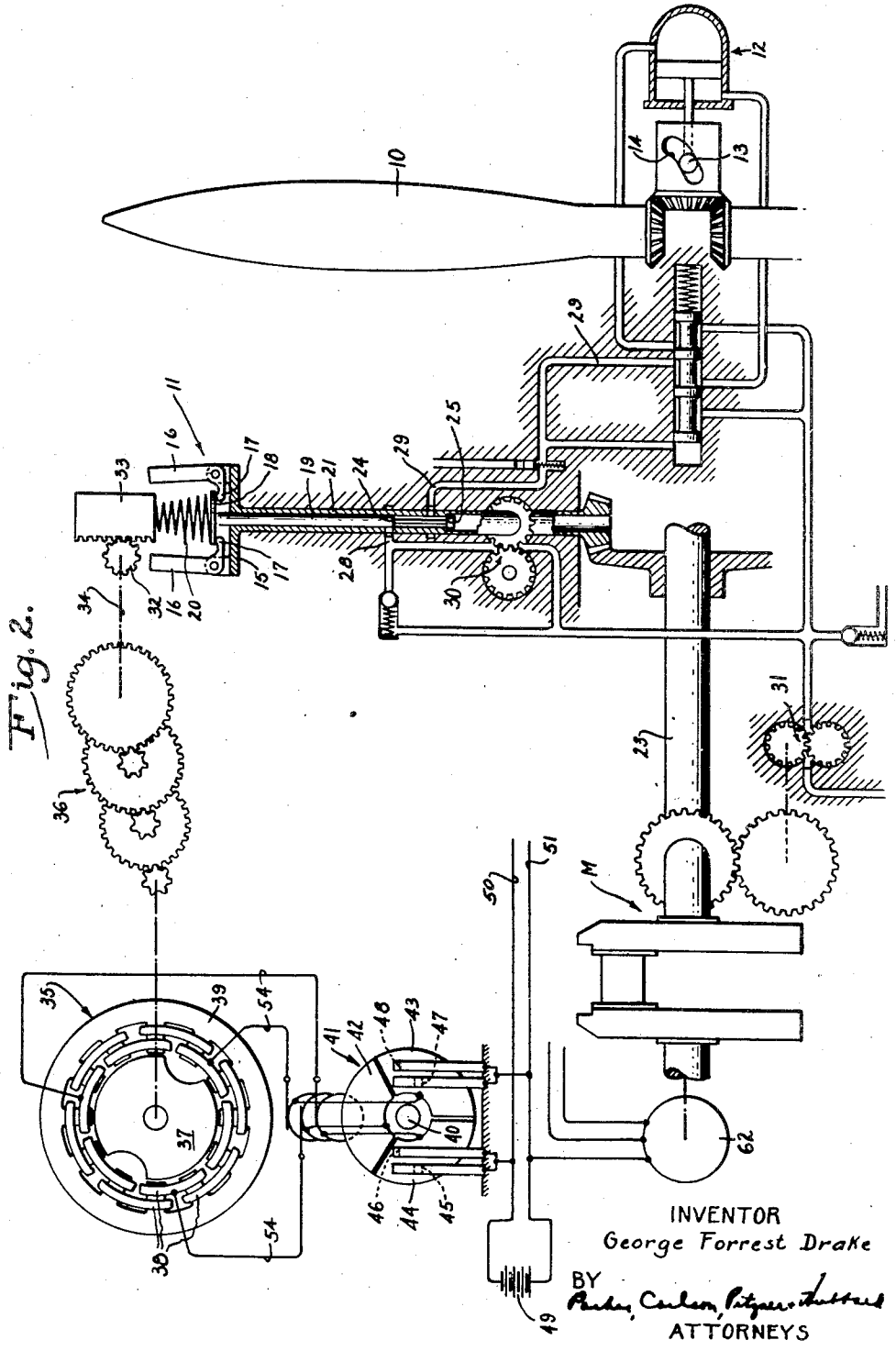

Fig. 2.

INVENTOR
George Forrest Drake
BY
Parker, Carlson, Pitzer & Hubbard
ATTORNEYS

Dec. 17, 1946. G. F. DRAKE 2,412,605

SPEED ADJUSTING MECHANISM

Filed Feb. 3, 1943 3 Sheets-Sheet 3

Fig. 3.

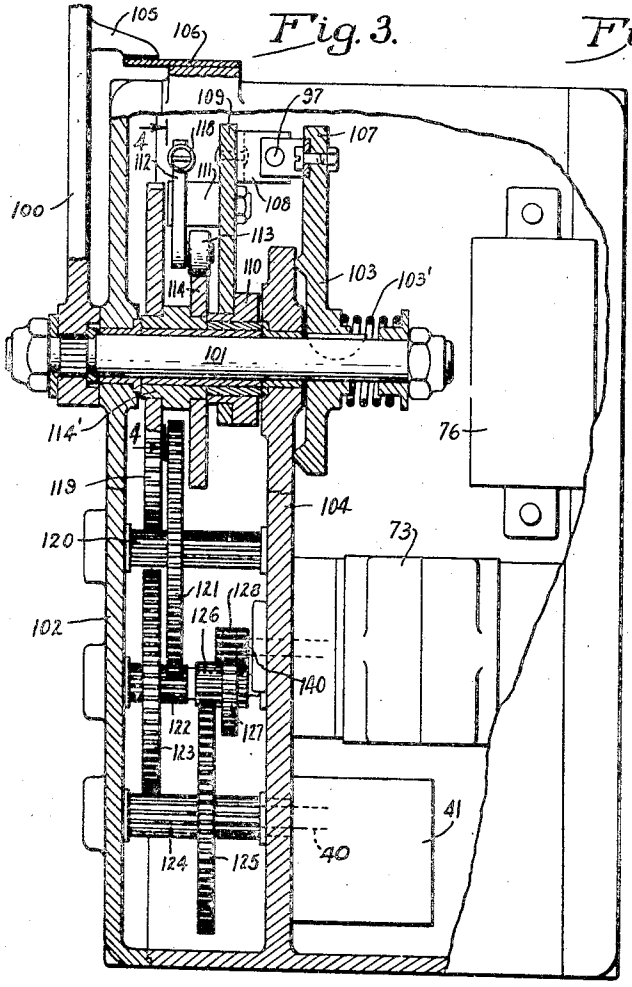

Fig. 4.

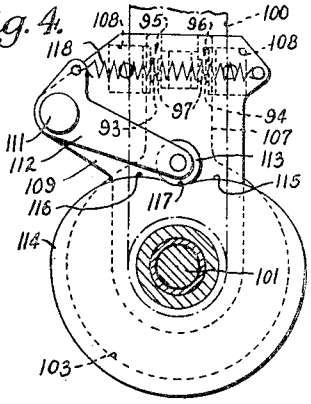

Fig. 5.

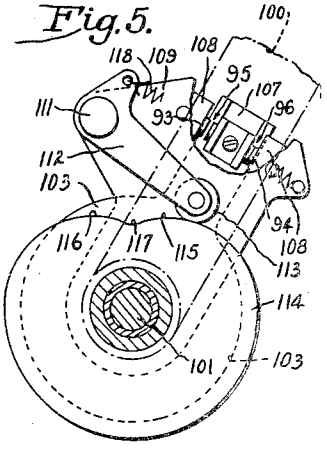

Fig. 6.

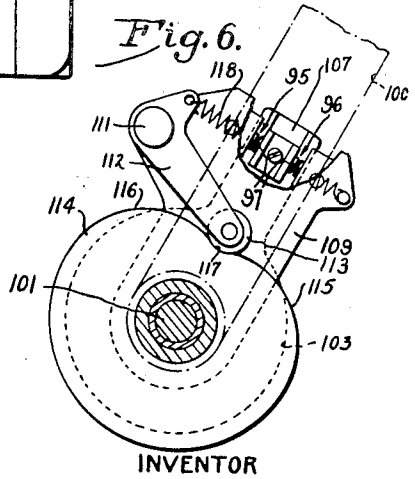

INVENTOR
George Forrest Drake
BY Parker, Carlson, Pitzner & Hubbard
ATTORNEYS

Patented Dec. 17, 1946 2,412,605

UNITED STATES PATENT OFFICE

2,412,605

SPEED ADJUSTING MECHANISM

George Forrest Drake, Rockford, Ill., assignor to Woodward Governor Company, Rockford, Ill., a corporation of Illinois

Application February 3, 1943, Serial No. 474,549

11 Claims. (Cl. 60—97)

1

This invention relates generally to mechanisms for adjusting the speed setting of a governor or other regulating device from a remote point of control, and in certain of its aspects relates to improvements in a synchronizing mechanism of the general character disclosed in my copending application Serial No. 525,913, filed March 10, 1944, to which this application is subordinate, said application Serial No. 525,913 being a continuation-in-part of application Serial No. 426,362, filed January 10, 1942, the latter now abandoned.

One object is to combine a speed adjusting mechanism for a plurality of prime movers with a novel means for effecting automatic synchronization of the prime movers.

A further object is to incorporate in such a combined adjusting and synchronizing control a novel means for rendering the synchronizing control operative and inoperative automatically as an incident to starting and stopping of the manually operable adjusting mechanism.

Other objects and advantages of the invention will become apparent from the following detailed description taken in connection with the accompanying drawings, in which

Figure 1 is a schematic view and wiring diagram of the improved speed adjusting control.

Fig. 2 is a schematic view of the speed adjuster for one power unit.

Fig. 3 is a vertical sectional view of the speed selecting mechanism.

Fig. 4 is a section taken along the line 4—4 of Fig. 3.

Figs. 5 and 6 are similar views showing different positions.

The invention has been shown in the drawings and will be described herein as applied to the speed control of a plurality of internal combustion engines M and S. It is to be understood, however, that I do not intend to limit the invention by such disclosure nor to the particular illustrated constructions of the various switch, governor, motor units and electrical transmitters, but aim to cover all modifications, alternative constructions, and uses falling within the scope of the invention as expressed in the appended claims.

The speeds of the engines M and S may be controlled by individual governors 11 arranged to actuate the engine throttles or, as shown, to effect the speed regulation by adjusting the pitch of propellers 10 driven by the engines. This may be accomplished by applying hydraulic pressure controlled by the governor 11 to a servo motor

2

12 rotatable with the propeller and operating on the follower 13 of a cam 14 which, through bevel gear connections, turns the propeller blades on their longitudinal axes.

The governor includes a rotary head 15 pivotally supporting flyballs 16 having arms 17 bearing upwardly against the head 18 of a valve rod 19 which is urged downwardly by an adjustable speeder spring 20. The head 15 is on the upper end of a sleeve 21 journaled in the governor casing and driven from its lower end through a gear connection with the engine crankshaft 23. The valve rod 19 has spaced lands 24 and 25 thereon coacting with ports in the sleeve 21 and shiftable upwardly by the flyballs in response to a speed increase above the prevailing speed setting to admit pressure fluid from a supply line 28 to a conduit 29 leading to the rod end of the servo motor cylinder. The servo piston moves to increase the propeller pitch until the valve is again closed as shown in Fig. 2. In response to a speed decrease, the valve rod is lowered permitting the flow of fluid out of the servo through the conduit 29 past the land 25 to the sump. The propeller pitch is thus decreased until the speed reduction has been corrected for. Oil under the proper pressure is supplied to the line 28 by a booster pump 30 driven from the rotating sleeve 21 and supplied with oil by the engine lubricating pump 31.

From the foregoing, it will be apparent that the governor operates automatically through the pitch-changing mechanism to maintain the speed of the engine constant and at a value determined by the load imposed on the flyballs by the speeder spring 20. This load may be adjusted by turning a pinion 32 meshing with rack teeth on a plug 33 which is mounted in the governor for movement axially of the spring.

In accordance with the present invention, the pinion shaft 34 of the governor of the engine M is adapted to be turned by an electric motor 35 mounted on the governor casing and acting through reduction gearing 36. This motor is on the receiving end of an electrical transmitting system controllable from a transmitter located at a point of manual control remote from the engine. Herein, the motor is of the step type having a permanently magnetized rotor 37 adapted to occupy any one of twelve well-defined angular positions according to the combination of direct current potentials applied to three sets of distributed windings 38 on its stator 39. When the windings are deenergized, the rotor will come to an abrupt stop.

Operation of the step motor in one direction or the other is effected by turning the shaft 40 of the transmitter which is a commutator switch 41 having angularly spaced segments 42, 43, and 44 engaged as shown in Fig. 2 by contacts 45, 46, 47, and 48. These are arranged in pairs respectively connected to the different polar terminals of a battery 49 through conductors 50 and 51. The segments are connected directly to the windings of the step motor 35 through suitable brushes and conductors 54. The construction of the step motor is such that as the switch shaft 40 turns in one direction, the windings of the step motor will be energized in successive combinations causing the rotor 37 to follow the movements of the switch shaft. Reverse operation of the motor takes place when the commutator switch is turned in the opposite direction.

The governor of the engine S is similarly adapted for adjustment of its speeder spring by a step motor 52 of the same construction as the motor 35. This motor is, in accordance with one aspect of the present invention, adapted to be energized alternatively either under the control of the commutator switch 41 or of a commutator switch 53 of the same construction also located at the remote point of control and having its parts indicated by corresponding primed reference numbers. The motor 52 may be connected to the segments of the switch 53 through conductors 55 including switches 56 or it may be energized from the commutator switch 41 through conductors 57 and 57', the latter having switches 59 interposed therein. The movable contacts of the switches 56 and 59 are connected to the armature of a magnetic relay 58 in a manner such that the switches 56 are closed and the switches 59 are open when the relay coil is deenergized, the condition being reversed when the coil is energized. The battery leads 50 and 51 are extended to the stationary contacts of the switch 53.

In accordance with one aspect of the present invention, one of the engines, in this instance M, is selected as the master, and the speed of the other or slave engine S is matched accurately by operation of the commutator switch 53 in directions and amounts such as to correct for any departure of the slave engine speed from that of the master. The speed matching is effected by a differential three phase motor or so-called differential Selsyn 60 comprising a three phase two pole stator and a three phase two pole rotor having windings 61 and 61', the rotor being fast on the commutator switch shaft 40'. These windings are energized respectively by small permanent magnet generators 62 and 63 respectively mounted on the engines M and S and driven thereby. Generators of the type suitable for this purpose are disclosed in Patent No. 2,071,536. The generator 63 is connected to the rotor winding 61' by conductors 65 including switches 66 while switches 67 are included in conductors 68 leading from the generator 62 to the stator winding 61.

With both windings energized and the engines M and S running at the same speed, the frequencies of the two current sources will be identical so that the rotor shaft 40' will not turn. When the speeds of the master and slave engines are different, the frequencies of the currents supplied by the respective generators will differ proportionately, and the differential rotor shaft will turn in a direction determined by which frequency is higher. Such operation will continue until the slave engine has, by operation of the commutator switch 53 and the step motor 52, been brought into synchronism with the master M.

To enable the differential motor 60 to be disabled at certain times as during the adjustment of the engine speeds under manual control, the switches 66 and 67 are connected to the armature of a magnetic relay 68 interposed in a circuit extending from one power lead 50 through one or more normally closed manually operable switches 69, a conductor 70, the relay coil 68, one or more normally open switches 71 connected in parallel, and a conductor 73 connected to the other power lead 51. When the relay coil is energized by closure of one of the switches 71, the switches 66 and 67 will be closed and the differential motor 60 will be rendered operative. Such operation of the relay also results in closure of a switch 72 which completes a holding circuit through the relay coil and the switches 69. Thus energization of the relay 68 is maintained until one of the switches 69 is opened whereupon the switches 66 and 67 are opened and the differential motor is disabled.

To adjust the speed settings of the governors 11 under manual control from a remote point, the shaft 40 of the transmitter or commutator switch 41 is connected to the shaft of a reversible motor 73' preferably of the type having a permanent magnet stator 74 and a wound rotor 75. The direction of operation of such a motor may be reversed by reversing the current flow through the rotor winding. Herein, this winding is energized selectively or deenergized by a magnetic reversing switch 76 operated differentially by the energization of coils 77 and 78. As shown, the switch comprises a frame 79 pivoted intermediate its ends at 80 and adapted to be actuated from opposite ends by the armatures of the magnets 77 and 78.

Projecting from the frame are spring arms 81 which cooperate with stationary contacts to form switches 82 and 83 which are both closed when both of the coils 77 and 78 are deenergized. Arms 84 on the frame cooperate with stationary contacts to form switches 85 and 86 which are both open when the coils 77 and 78 are deenergized. The stationary contacts of the switches 82 and 85 are connected by a conductor 87 to one terminal of the rotor winding while the contacts of the switches 83 and 86 are connected to the other terminal by a conductor 88. A conductor 89 extends from the arms 84 to one battery lead 50 while a conductor 90 connects the other arms 81 to the other battery lead 51.

The coils 77 and 78 are connected together at one end and their insulated terminals are joined by conductors 91 and 92 to contacts 93 and 94 of two control switches 95 and 96 (Fig. 4) having a common intermediate contact 97 connected by a conductor 98 to the battery lead 50. It will be apparent that when the coil 77 is energized, the frame 79 will be pushed downwardly and tilted counterclockwise about the center 80 opening the switch 82 and closing the switch 85 so that current flows through the motor 73' from the lead 50, conductor 89, switch 85, conductor 87, rotor 75, conductor 88, and switch 83 to the lead 51. Current flows in the reverse direction through the switches 82 and 86 when the coil 78 is energized tilting the frame 79 clockwise. When both coils 77 and 78 become deenergized, the switches 82 and 83 both close thereby short-circuiting the rotor 75 to produce abrupt stop-

ping of the commutator switch 41 and therefore of the step motors controlled thereby.

In accordance with the present invention, the motor is started in one direction or the other by movement of a manually operable member 100 to a position corresponding to a newly selected speed setting where the member is retained, frictionally in this instance, and operation of the motor continues until the governors 11 have reached the selected speed setting whereupon the motor will be stopped automatically. While the manually operable member may take various forms, it is shown herein as comprising a hand lever fast on a shaft 101 which is journaled in and projecting from one wall of a casing 102 which houses the motors 60 and 73', the commutator switches 41 and 53, and the relays 58, 68, and 76. This lever may be mounted in any convenient location within the reach of the operator or pilot.

Rotatable with the shaft 101 is a disk 103 which is urged by a compression spring 103' against a stationary plate 104 to create the friction necessary to hold the lever 100 in any selected position while permitting the lever to be swung manually in either direction. A pointer 105 on the lever coacts with a scale 106 to indicate the speed setting in revolutions per minute or other units. Mounted on an arm 107 projecting upwardly from the disk 103 are the common contacts 97 which are disposed between spaced lugs 108 carrying the contacts 93 and 94 and projecting rearwardly from an upwardly projecting arm 109. The latter is on a loose bushing 110 on the shaft 101 and carries the pivot 111 of a bell crank 112. A roller 113 on one arm of the bell crank constitutes the follower of a heart-shaped cam 114 having gradual rises 115 and 116 on opposite sides of a notch 117. A spring 118 acting between the bell crank and the arm 109 holds the roller in contact with the cam surface. The arrangement is such that when the roller is disposed in the notch, the contacts 97 are disposed out of engagement with the contacts 93 and 94 as shown in Figs. 4 and 6. When the roller is engaging either incline, the contacts 93 and 94 are shifted relative to the arm 107 and one or the other is pressed against one contact 97. The cam 114 is fast on a sleeve 114' which carries a gear 119 driven through reduction gears 120 to 127 from a pinion 128 on the shaft 140 of the motor 73'. The direction of this drive is always such as to move the notch 117 of the cam back toward the follower roller 113.

It will be observed that the two arms 107 and 109 are swingable about a common axis and are adapted for the limited degree of relative movement required to actuate the switches. The cam 114 and its follower provide a connection between the arm 109 and the cam shaft which is adapted to yield in either direction after closure of one switch and permit both arms to move in unison to the selected switch position. Thereafter, the cam operates to determine the extent of separation of the motors and therefore the amount of adjustment of the speed regulator or governor. This action is obtained by correlating the gear trains and other parts so that the range of motion of the hand lever corresponds to the range of speed adjustment of the governor. That is to say, a given change in the lever position will, under the control of the switches and the transmitting system, produce a proportional change in the movement of the governor adjusting plug. In this way, the pilot may increase or decrease the engine speed any desired number of revolutions simply by changing the position of the lever the same number of revolutions as read on the scale 106.

With the switches 95 and 96 thus arranged, the motor 73' will be idle when the cam notch 117 is positioned opposite the roller 113 as shown in Fig. 1, both switches then being open. Now, if the lever 100 is turned clockwise as shown in Fig. 5 to select a new speed setting, the arm 107 and the contact 97 thereon will engage the contact 94 and carry the latter and the arm 109 along with the lever, the roller 113 riding up the incline 115 after the contact engagement occurs. The relay coil 78 and the relay 58 are thus energized to start the motor and also connect the step motor 52 to the commutator switch 41. The motor runs the switch shaft 40 in a direction to change the speed settings of both governors 11 to correspond to the newly selected speed and at the same time to turn the cam 114 in a direction to follow up the movement of the arm 107 and advance the notch 117 toward the roller 113. In this operation, the selected position of the lever 100 and the contact 94 are maintained by the friction created between the disk 103 and the plate 104, and the incline 115 acts on the bell crank 112 to prevent opening of the switch 96 until the cam 114 has been turned sufficiently to present the notch 117 opposite the roller 113. As the latter becomes centered in the notch as shown in Fig. 6 with the lever in its new position, the arm 109 is moved by the spring 118 to cause the contact 94 to disengage the lever contact 97 thereby opening the switch 96 and stopping the motor 73'. Thus, the extent of motor operation is determined by the selected position of the lever 100 and this without the necessity of the pilot holding the lever to retain the selection.

The same operation takes place when a reverse speed setting is selected by moving the lever 100 in the opposite direction. In that case, the switch 95 is closed and the relay coil 77 is energized along with the relay 58 so that the motor 73' and the step motors 35 and 52 run reversely changing the speed settings of the governors correspondingly until the incline 116 has moved past the roller 113 and the latter has become centered in the notch 117. At this time, the switch 95 opens, stopping the motor 73' and simultaneously disconnecting the step motor 52 from the commutator switch 41 while connecting it to the commutator switch 53. By actuating the relay switches 56 and 59 automatically as above described in response to energization of the motor 73' for operation in either direction, the adjusting step motors for both the master and slave governors will be adjusted simultaneously and all of the associated engines will be brought rapidly to the speed selected by positioning of the single lever 100. Thus, the lever, the step motors 35 and 52, the commutator switch 41, the motor 73', and the control for the latter may be utilized as a remotely controlled mechanism for adjusting the speeds of all of the engines during take-off and landing, or to change the engine speeds to be maintained during automatic synchronizing.

Such synchronizing may be effected in the present instance simply by the addition of the commutator switch 53, the differential motor 60 and the generators 62 and 63. These become effective when the switches 66 and 67 are closed thereby completing the connections from the generators to the differential motor 60 whereupon the slave step motor 52 will be operated automatically to adjust the slave governor and match

the speed of the slave engine against that of the master.

The synchronizing mechanism is disabled automatically while the engine speeds are being adjusted manually. This is accomplished by disconnection of the step motor 52 from the commutator switch 41 automatically as an incident to energization of the manually controlled adjusting motor 73'. The automatic control is restored automatically when the selected master engine speed adjustment has been completed and this, without further attention by the pilot.

To disable the automatic synchronizing mechanism manually, it is only necessary to open one of the switches 69 and thereby interrupt the holding circuit for the relay 68. The resulting deenergization of the latter disconnects the Selsyn 60 from the generators 62 and 63 until one of the switches 71 is again closed to reenergize the relay 68 and reestablish automatic synchronizing.

It will be observed that the number of slave engines S to be synchronized with the master M may be increased as desired simply by multiplying the number of step motors, commutator switches, differential motors, generators, relays 58 and 68, these being connected in the control circuits in the same ways as the corresponding units shown.

I claim as my invention:

1. A control for matching the speeds of slave and master power units each having an adjustable speed regulator, said control comprising, in combination, slave and master step motors each arranged to actuate one of said regulators, a master commutator switch operable to control the master step motor and connectable selectively to the slave step motor, a second commutator switch connectable selectively to said slave step motor, a differential motor for driving said second commutator switch and operable selectively in accordance with the differences in the speeds of said master and slave units, a reversible rotary electric motor driving means for said master commutator switch, a manually operable member adapted to remain in a manually selected position, switching means operable in response to a change in the position of said member to start said driving means and then continue the operation thereof until said master speed regulator has been adjusted to a setting corresponding to that selected by said member, and means operable to effect energization of said slave step motor from said master commutator switch during operation of said driving means in either direction and from said second commutator switch when said driving means is idle.

2. A control for matching the speeds of slave and master power units each having an adjustable speed regulator, said control comprising, in combination, slave and master step motors each arranged to actuate one of said regulators, a master commutator switch operable to control the master step motor, a second commutator switch, a differential motor operable to drive said second commutator switch in accordance with differences in the speeds of said master and slave units, reversible electric motor driving means for said master commutator switch, a manually operable member movable independently of said regulators, switching means operable in response to a change in the position of said member to start said driving means in a corresponding direction and then continue the operation thereof until said master speed regulator has been adjusted to a setting corresponding to that selected by said member, and means operable to shift the control of said slave step motor to said master commutator switch during operation of said driving means in either direction and to said second commutator switch when said driving means is idle.

3. A control for matching the speeds of slave and master power units having individual speed regulators, said control comprising, in combination, slave and master step motors each arranged to actuate one of said regulators, a master commutator switch operable to control the master step motor, a second commutator switch, means automatically responsive to differences in the speeds of said master and slave units to actuate said second commutator switch in a direction to correct for such differences, motor driven means for driving said master commutator switch, means operable selectively under manual control to operate said driving means, and means operable automatically to shift the control of said slave step motor to said master commutator switch during operation of said driving means and to said second commutator switch when said driving means is idle.

4. A control for matching the speeds of slave and master power units having individual speed regulators, said control comprising, in combination, slave and master step motors each arranged to actuate one of said regulators, a master commutator switch operable to control the master step motor, a second commutator switch, means automatically responsive to differences in the speeds of said master and slave units to actuate said second commutator switch in a direction to correct for such differences, motor driving means for said master commutator switch, means operable selectively under manual control to cause operation of said driving means, and means operable automatically to cause energization of said slave step motor from said master commutator switch alone during operation of said driving means.

5. A control for matching the speeds of slave and master power units each having an individual speed regulator, said control comprising, in combination, remotely controlled means for adjusting the master speed regulator, means automatically responsive to differences in the speeds of said master and slave units to adjust the slave speed regulator and correct for such differences, and means operable automatically during adjustment of said master speed regulator to disable said last mentioned means and cause adjustment of the slave speed regulator in unison with the master regulator.

6. A control for matching the speeds of slave and master power units having individual speed regulators, said control comprising, in combination, slave and master motors each arranged to actuate one of said regulators, synchronizing means automatically responsive to differences in the speeds of said master and slave units to actuate the slave motor in a direction to correct for such differences, motor driving means for controlling the operation of said master adjusting motor in opposite directions, means operable selectively under manual control to operate said driving means, and means operable automatically during operation of said driving means to cause operation of the slave motor in a corresponding direction independently of said synchronizing means.

7. A control for matching the speeds of slave and master power units having individual speed regulators, said control comprising, in combina-

tion, slave and master receiving motors arranged to actuate the respective regulators, a master electrical transmitter operable to energize the master receiving motor and cause rotation of the latter in unison with the transmitter, a second transmitter, means automatically responsive to differences in the speeds of said master and slave units to actuate said second transmitter in a direction to correct for such differences, motor driving means for operating said master transmitter and cause operation of said master motor selectively in one direction or the other, means operable selectively under manual control to cause operation of said driving means, and means operable automatically to cause energization of said slave receiving motor from said master transmitter alone during operation of said driving means.

8. A control for matching the speeds of slave and master power units each having an adjustable speed regulator, said control comprising slave and master receiving electric actuators arranged to actuate the respective regulators, an electrical transmitter operable to energize said receiving actuators and cause operation of the latter to adjust said master and slave regulators in unison, an electric motor, switching means controlling the operation thereof, means including a manually operable member shiftable selectively to different positions corresponding to speeds of said power units and operable, when moved to a new position, to actuate said switching means and energize said motor for operation of said receiving motors by said transmitter in a direction to move said regulators to settings corresponding to said speeds, follow up means actuated by said motor and actuating said switching means to continue the operation thereof until the regulator setting selected by said member has been attained, mechanism automatically responsive to a difference in the speeds of said master and slave power units to energize said slave speed regulator in a direction to correct for such difference, a relay energized and deenergized under the control of said switching means during operation thereof by said member and said follow up means, and means actuated by said relay to disable said mechanism until a new speed setting of said regulators selected by said member has been attained and then to render said mechanism again operative.

9. A control for matching the speeds of slave and master power units each having an adjustable speed regulator, said control comprising slave and master receiving electric actuators arranged to actuate the respective regulators, an electrical transmitter operable to energize said receiving actuators and cause operation of the latter to adjust said master and slave regulators in unison, electric motor driving means, means including a manually operable member shiftable selectively to different positions corresponding to speeds of said power units and operable, when moved to a new position, to energize said driving

means and cause operation of said receiving motors by said transmitter in a direction to move said regulators to settings corresponding to said speeds, follow-up means actuated by said driving means for continuing the operation thereof until the regulator setting selected by said member has been attained, mechanism automatically responsive to a difference in the speeds of said master and slave power units to energize said slave speed regulator in a direction to correct for such difference, and means operable automatically to maintain said mechanism disabled during operation of said driving means and then to render said mechanism again operative.

10. A control for matching the speeds of slave and master power units each having an adjustable speed regulator, said control comprising slave and master receiving electric actuators arranged to actuate the respective regulators, an electrical transmitter operable to energize said receiving actuators and cause rotation of the latter to adjust said master and slave regulators in unison, electric motor driving means, means including a manually operable member shiftable selectively to different positions corresponding to speeds of said power units and operable, when moved to a new position, to energize said driving means and cause operation of said receiving motors by said transmitter in a direction to move said regulators to settings corresponding to said speeds, mechanism automatically responsive to a difference in the speeds of said master and slave power units to energize said slave speed regulator in a direction to correct for such difference and maintain said units synchronized, and electric switching means actuated automatically as an incident to movement of said member to select a new speed setting to disable said mechanism until such speed setting of said regulators is attained and then to render said mechanism again operative.

11. A control for matching the speeds of slave and master power units each having an adjustable speed regulator, said control comprising slave and master receiving electric actuators arranged to actuate the respective regulators, an electrical transmitter operable to energize said receiving actuators and cause rotation of the latter to adjust said master and slave regulators in unison, means manually operable to cause actuation of said transmitter and said receiving motors in a direction to move said regulators to a selected speed setting, mechanism automatically responsive to a difference in the speeds of said master and slave power units to energize said slave speed regulator in a direction to correct for such difference and maintain said units synchronized, and means actuated automatically as an incident to actuation of said manually operable means to select a new speed setting to disable said mechanism until such speed setting of said regulators is attained and then to render said mechanism again operative.

GEORGE FORREST DRAKE.