April 7, 1964 C. C. HABBENA 3,128,021

TRAY FOR GOLF CARTS

Filed Sept. 22, 1960

Fig. 1

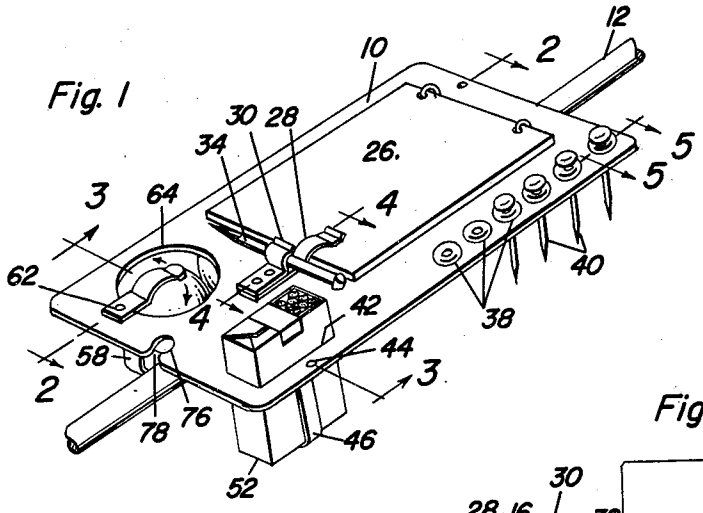

Fig. 5

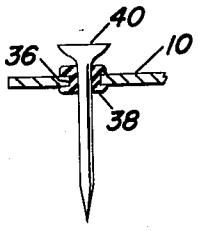

Fig. 2

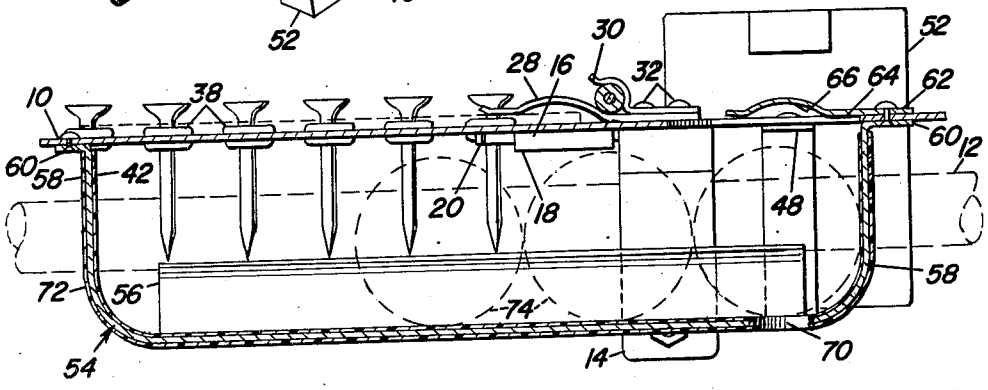

Fig. 4

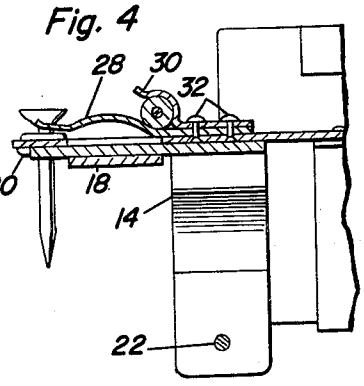

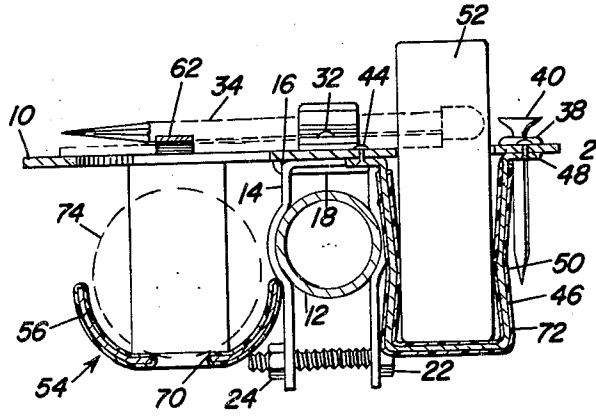

Fig. 3

Carl C. Habbena

INVENTOR.

BY Clarence A. O'Brien and Harvey B. Jacobson

Attorneys

United States Patent Office 3,128,021 Patented Apr. 7, 1964

3,128,021

TRAY FOR GOLF CARTS

Carl C. Habbena, 530 Lake St., Rockwell City, Iowa

Filed Sept. 22, 1960, Ser. No. 57,675
2 Claims. (Cl. 224—29)

This invention relates to a golf cart tray or accessory holder adapted to be attached to a part of a golf cart for carrying the various accessories of a golfer.

More specifically, the invention relates to a tray for attachment to a golf cart adapted to hold and retain a supply of golf balls, a supply of tees, a score card, a pencil and a package of cigarettes. A receptacle is also provided on the tray for carrying a lighted cigarette.

An object of the invention is to provide a golf tray which is readily adapted to be attached to a handle or a structural portion of the golf cart, whereby a golfer will have his accessories readily available.

A further object of the invention is to provide a golf tray which is simple in design and cheaply and easily manufactured.

A further object of the invention is to provide a golf tray not only for carrying various articles, but also retaining them against accidental dislodgement.

Additional objects and advantages of this invention will be apparent from the following description and accompanying drawings wherein:

FIGURE 1 is a perspective view of the novel golf tray;

FIGURE 2 is a vertical longitudinal sectional view taken upon an enlarged scale on the plane indicated by the section line 2—2 of FIGURE 1;

FIGURE 3 is a vertical transverse sectional view taken upon an enlarged scale and substantially on the plane indicated by the section line 3—3 of FIGURE 1;

FIGURE 4 is a vertical longitudinal sectional view taken on an enlarged scale and substantially upon the plane indicated by section line 4—4 of FIGURE 1 and shows a cross section of a pencil and score card holder; and

FIGURE 5 is a detail view in vertical longitudinal section taken substantially upon the plane indicated by section line 5—5 of FIGURE 1 and showing upon an enlarged scale one of the tee holders.

Referring to the drawing, and as seen in FIGURE 1, the main body of the tray is composed of a flat body 10 secured to a handle 12 or other structural member of a golf cart.

The means for connecting the body of the tray to the golf cart comprises a resilient, U-shaped clamp 14. The body 10 has a recess portion 16 which is punched and depressed from the body to form in effect a strap area. This strap is indicated at 18, is integral with the body plate 10 and overlaps an extension 20 which is integral with the U-shaped clamp 14. The extension 20 of the U-shaped clamp 14 is tightly fitted within the recess 16 of the body and held therein by friction. The U-shaped clamp is held in tight gripping relation with the golf cart handle or member by tightening the bolt 22 and nut 24.

The score card or pad 26 is retained on the body plate 10 by means of a resilient member 28. As shown in FIGURE 1, the free end of this resilient member is bent upwardly so that the score card may be easily pushed between this resilient member and body 10. The pencil retaining member 30 lies directly on top of the score card retaining member 28 and both of these members are rigidly secured to the body 10 by means of rivets 32 extending through all of these members. As shown in FIGURE 1, the free end of the pencil retaining member 30 is also bent upwardly so that the pencil 34 may be forced thereunder, and member 30 contains a lateral

groove adjacent to its end for receiving and retaining the pencil.

Along one side of the body 10 is provided a series of holes 36, each hole containing a resilient grommet 38 which are pressed within the holes 36 and held therein by flanges around a circular groove in the grommet. The grommets 38 are preferably formed of some material, such as rubber, which is resilient and has a high friction coefficient. Natural or synthetic rubber are examples of such materials. As shown in FIGURES 1 and 5, the tees 40 fit snugly within the grommets and are held by friction therein. However, they may be manually withdrawn therefrom whenever desired by the user of the golf cart.

As shown in FIGURE 1, one corner of the body 10 has a rectangular hole 42 therein. Secured by means of rivets 44 to the sides of this opening is a receptacle 46 which is U-shaped in cross-section. As shown in FIGURE 3, the flanges 48 of this receptacle receive through holes therein the rivets 44 for securing it to the body 10. The vertical sides of this receptacle, as shown at 50, are slightly concave so that they may frictionally grip and retain a pack of cigarettes 52.

Mounted below and parallel to one side of the body 1 is a ball rack 54. As clearly shown in FIGURES 2 and 3, the rack has longitudinal flanges 56 which are arcuate in cross-section. The ends of the rack have vertical abutments and supporting members 58 whose upper ends are bent outwardly into horizontal flanges 60 which are secured by rivets to the body 10. One of these rivets also secures a pivoted, horizontal ball retaining member 62 to the body also. A hole 64 is formed in one corner of the body 10 and lies over one end of the ball rack 54. The pivoted ball retaining member 62 normally extends across this hole to retain the balls in the rack. As clearly shown in FIGURES 1 and 2, the ball retaining member 62 has an arcuate recess in one end thereof at 66. This recess provides a space for the golfer's finger to extend under the ball retaining member and also permits the balls to be inserted and removed more easily from the rack. Directly below the hole 64, is a hole 70 provided at the bottom of the ball rack. As shown in FIGURE 3, this hole 70 tends to retain a ball directly under the opening 64 for easy and quick removal thereof. This hole also aids in the removal of the ball because the golfer can stick one finger through this hole to lift the ball up through the opening 64.

The parts of applicant's ball tray, are preferably made of metal such as aluminum, brass or steel although other suitable materials could be used. For durability, economy and eye-appeal, applicant has found that annodized aluminum is a very suitable material for making the body 10. Applicant has also found it desirable to coat the cigarette retaining member 46 and the ball rack 54 with a protective coating 72. This coating is relatively thick and preferably of plastic. On the ball rack, this coating 72 protects the golf balls 74 from being scratched or marred by the corners and edges of the rack 54. This coating also tends to deaden the sound of the golf balls rolling in the rack and the sound of their impact when they are dropped into the rack. On the cigarette retaining member 46, this coating tends to provide a friction surface without sharp edges which grips the side of the cigarette package 52 and prevents it from being accidentally dislodged from the retainer 72.

A hole 76 is formed adjacent one edge of the body 10 which is slightly smaller in diameter than a normal or regular size cigarette. A groove 78, which is slightly smaller in width than the diameter of the hole 76 is formed between the edge of the body 10 and the hole 76. The entrance to the slot or groove 78 is rounded off or enlarged to permit easy entrance of a cigarette.

In operation, applicant's device not only supports many of a golfer's accessories, but also retains them against loss for accidental dislodgement. All the accessories are held readily available to the golfer and may easily and quickly be removed by the golfer from the tray for his use.

In summary, the grommets 38 resiliently retain the tees 40, the resilient clips 28 and 30 retain the score pad 26 and pencil 34, the support 46 supports and retains a pack of cigarettes, the rack 54 supports and retains a supply of golf balls, and the hole 76 is readily available for retaining a burning cigarette.

The foregoing is considered as illustrative only of the principles of the invention. Further, since numerous modifications and changes will readily occur to those skilled in the art, it is not desired to limit the invention to the exact construction and operation shown and described, and accordingly all suitable modifications and equivalents may be resorted to, falling within the scope of the invention as claimed.

What is claimed as new is as follows:

1. A tray for golf carts comprising a substantially flat support, means on the support for fixing the support to a golf cart, and an elongated ball supporting and retaining rack secured to the underside of the support, said rack being capable of simultaneously retaining a plurality of golf balls, said support having an opening therethrough located over a portion of the rack, said opening being of a size so as to allow for the passage of a golf ball therethrough to and from the rack, said rack having an aperture through the bottom thereof in axial alignment with the support opening, said aperture being large enough so as to allow for the projection of a finger therethrough while being too small to allow the passage of a golf ball therethrough, whereby, upon alignment of a golf ball with the rack aperture and support opening, the ball can be discharged through the support opening by means of a finger extended through the rack aperture, said rack including a generally smooth bottom, vertically extending end portions on the bottom, said end portions being fixed to the underside of the support, said end portions providing limits to the longitudinal movement of the golf balls received in the rack, and elongated side flanges secured to each longitudinal edge of the rack bottom and projecting upwardly therefrom toward but stopping short of the underside of the support, the distance between the upper edges of the flanges and the support being less than the diameter of the golf balls.

2. The device of claim 1 wherein said support opening and rack aperture are located in lateral communication with one end of the rack, whereby the adjacent end portion assists in aligning a golf ball with the opening and aperture.

References Cited in the file of this patent

UNITED STATES PATENTS

986,158	Florsheim	Mar. 7, 1911
1,754,020	Hyde	Apr. 8, 1930
2,201,757	Bender	May 21, 1940
2,523,590	Potter et al.	Sept. 26, 1950
2,577,869	Adams	Dec. 11, 1951
2,663,604	Davies	Dec. 22, 1953
2,679,960	Lowe	June 1, 1954
2,782,971	Hershey	Feb. 26, 1957
2,826,206	Slater	Mar. 11, 1958