(No Model.)

G. L. WINSHIP.

CASTER.

No. 456,458. Patented July 21, 1891.

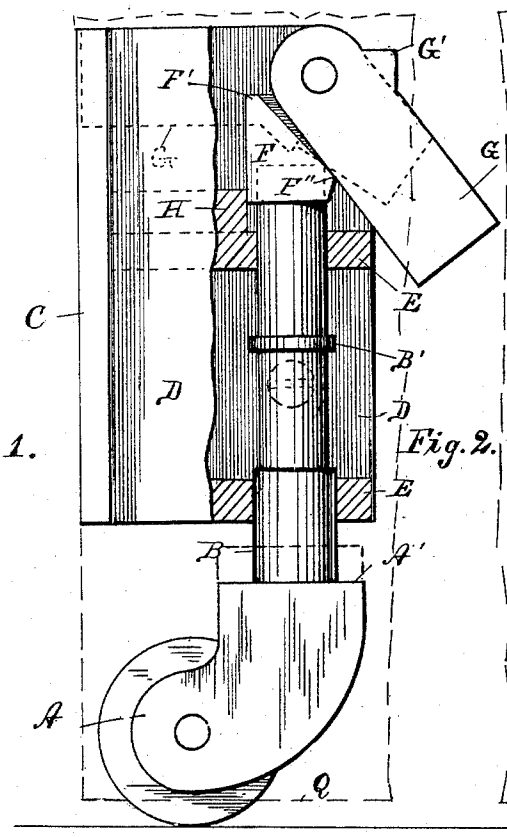

Fig. 1.

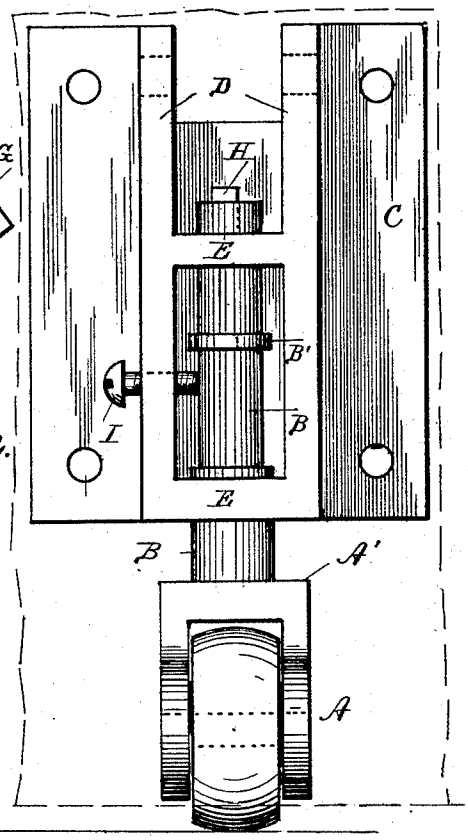

Fig. 2.

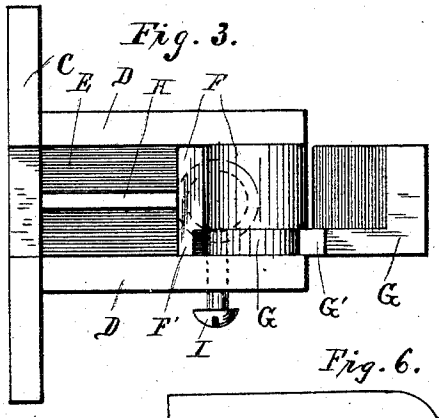

Fig. 3.

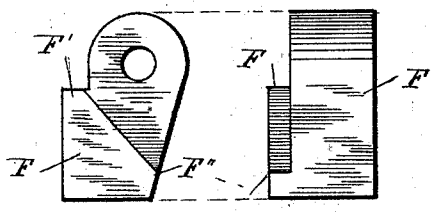

Fig. 4. Fig. 5.

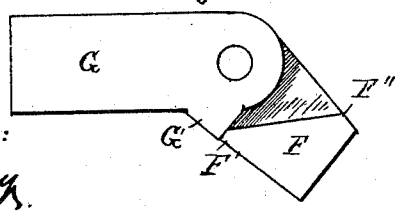

Fig. 6.

Witnesses:
E. N. Brooy
A. S. Lamar

Inventor:
G. L. Winship
By Wiles & Greene
Attys.

THE NORRIS PETERS CO., PHOTO-LITHO., WASHINGTON, D. C.

UNITED STATES PATENT OFFICE.

GUSTAVUS L. WINSHIP, OF FAIRLEE, ASSIGNOR TO THE OPINION MANUFACTURING COMPANY, OF BRADFORD, VERMONT.

CASTER.

SPECIFICATION forming part of Letters Patent No. 456,458, dated July 21, 1891.

Application filed March 11, 1891. Serial No. 384,580. (No model.)

To all whom it may concern:

Be it known that I, GUSTAVUS L. WINSHIP, a resident of Fairlee, in the county of Orange and State of Vermont, have invented certain new and useful Improvements in Casters; and I do hereby declare the following to be a full, clear, and exact description of the invention, such as will enable others skilled in the art to which it pertains to make and use the same.

This invention relates to casters adapted for vertical adjustment, whereby the weight of the structure to be supported may be at will borne by the caster or allowed to rest directly upon the floor.

In the accompanying drawings, Figure 1 is a side elevation of the caster and its attachments, parts being broken away. Fig. 2 is a view looking from the left in Fig. 1. Fig. 3 is a top plan of the same. Figs. 4, 5, and 6 are detail views.

In the drawings, A is a caster of ordinary construction, having a shank or shaft B of circular cross-section diminished near its middle to form a shoulder B′ and having at its base a shoulder A′. This shaft both slides and rotates in a case or bearing, which may be of any form adapted for convenient attachment to the structure to be supported, but which is shown in this instance as made up of a face-plate C, having two parallel flanges D connected by webs E, the lower of which forms a stop for the shoulder A′, and both of which serve as bearings for the shaft B, which extends above the upper one. Above and a little to one side of the upper end of the shaft is a pivot, upon which rotate both a block F and a weighted lever G. The block is thick enough to substantially fill the space between the flanges D, but is cut away to receive a lip from the lever G. This block is so formed that when swung to its lowest point, as shown in full lines in Fig. 1, it forms a stop for the upper end of the shaft B. Its further rotation by the upward pressure of the shaft is prevented by a stop H, forming a part of the case or bearing frame. The lever is provided with a lip G′, adapted to strike a projection F′ upon the block F when the two are in certain relative positions. A screw I passes through one of the flanges D or other convenient portion of the case to engage the shoulder B′ and prevent the shank from dropping from its bearings when the case is raised. The face-plate is secured upon the structure to be supported in such position that if the shoulder A′ be in contact with the lower web the caster will be slightly above the floor.

Now the parts being in position, (shown in dotted lines in Fig. 1 or in full lines in Fig. 6,) the caster bears no weight whatever, since it readily rises above the lower limit Q of the structure, to which the caster is attached; but if it be desired to place the weight upon it the lever is first swung to the right until its edge rests against the block at F″, and then the structure to be supported is raised with the attached face-plate and its immediate connections, the caster proper remaining meantime on the floor. As soon as the block can pass the upper end of the shank, the lever by its weight swings it to the position shown in full lines in Fig. 1, where, when the weight of the structure is again allowed to act, it transmits the whole to the upper end of the shank, and the structure is thus supported above the floor and upon the casters. Should the structure be lifted too high, the screw I prevents the shank from passing out of position, and hence no care is required, it being simply necessary to throw the lever to the right and raise the structure as quickly or slowly as may be desired. When the weight is to be again supported directly by the floor, the lever is thrown to the left till the lip G′ strikes the projection F′. If then the weight be raised, the weight of the lever instantly throws the block to the position shown in dotted lines, and the weight when lowered rests again directly upon the floor, the caster being free to rise relatively until it is above the lower limit of the structure, to which the case is secured.

The caster is especially adapted for use upon heavy structures, and it is evident that any number may be used, that the levers may all be adjusted before the weight is raised, and that thereafter it is only necessary to raise the structure either as a whole or at the sides or corners in succession. It is further plain that the exact forms shown are not essential.

What I claim is—

1. The combination, with a caster revolubly

mounted in a bearing permitting it to rise by longitudinal movement, of a block pivoted to swing above the shank to obstruct its vertical movement, and a weighted lever arranged to be rested at will against either side of said block, whereby the block is automatically forced into or out of obstructing position when the weight is raised from the caster.

2. The combination, with the case C D, having the stops, of the caster having the centrally-diminished shank B, the screw I, passing through one of the flanges D to the diminished portion of the shank, the block F, pivoted above the shank and swinging into its path, and the weighted lever G, swinging against opposite sides of said block to force it into and out of the path of the shank, substantially as set forth.

In testimony whereof I have signed this specification in the presence of two subscribing witnesses.

GUSTAVUS L. WINSHIP.

Witnesses:
W. H. HENLEY,
JOHN B. HAY.