DE BERT HARTLEY.

FLYING MACHINE.

APPLICATION FILED OCT. 3, 1910.

1,068,651.

Patented July 29, 1913.

4 SHEETS—SHEET 1.

Fig. 1.

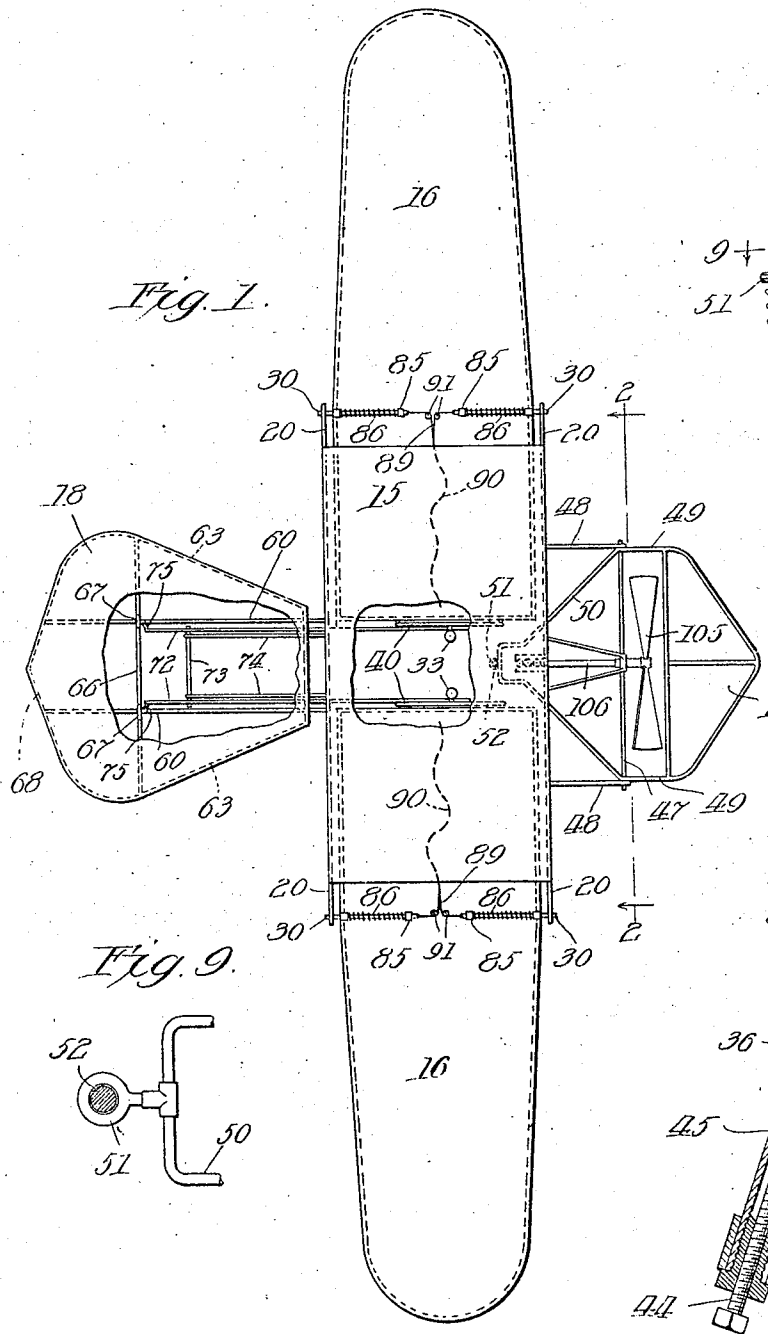

Fig. 8.

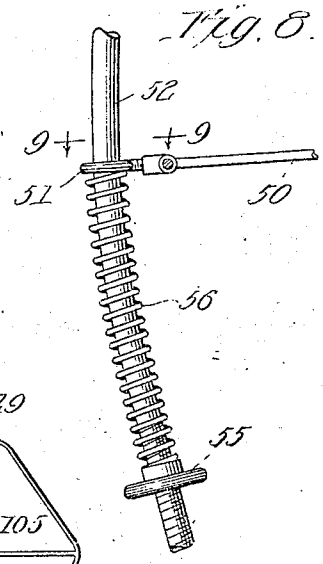

Fig. 9.

Fig. 10.

Witnesses:

Harry S. Gaither

William Goldberger.

Inventor:

DeBert Hartley

by Williamson, Hall & Hall

Atty

DE BERT HARTLEY.

FLYING MACHINE.

APPLICATION FILED OCT. 3, 1910.

1,068,651.

Patented July 29, 1913.

4 SHEETS—SHEET 2.

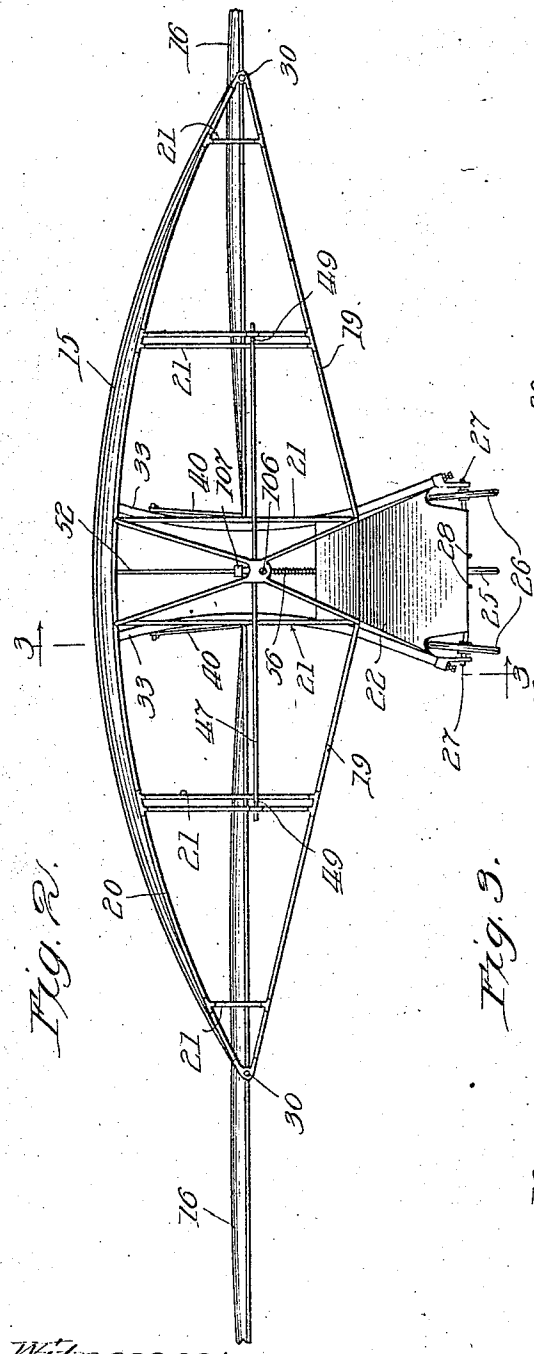

Fig. 2.

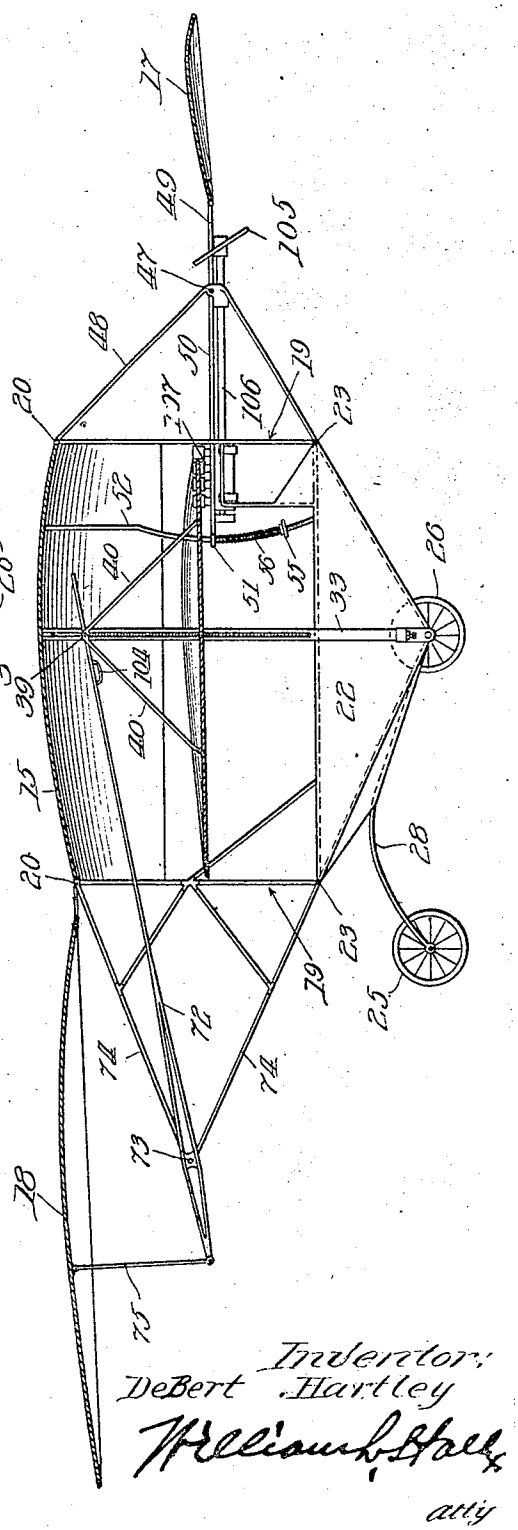

Fig. 3.

Witnesses:

Harry S. Gaither

William Goldberger.

Inventor:

DeBert Hartley

William B. Hall

atty

DE BERT HARTLEY.

FLYING MACHINE.

APPLICATION FILED OCT. 3, 1910.

1,068,651.

Patented July 29, 1913.

4 SHEETS—SHEET 3.

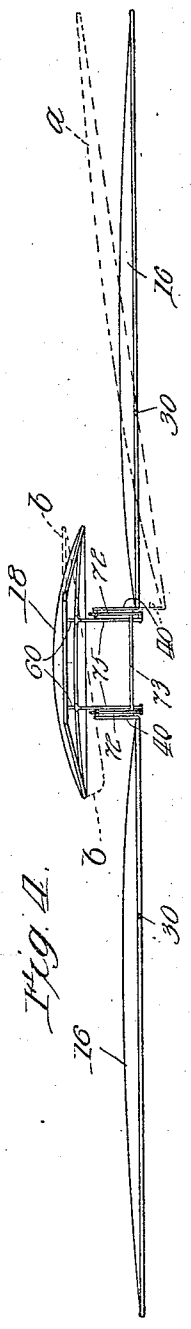

Fig. 4.

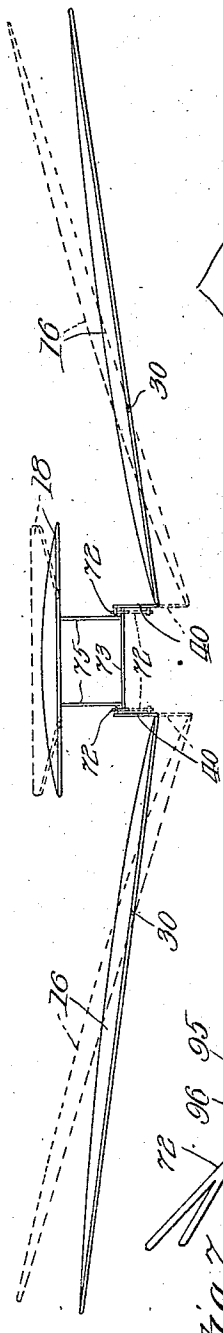

Fig. 5.

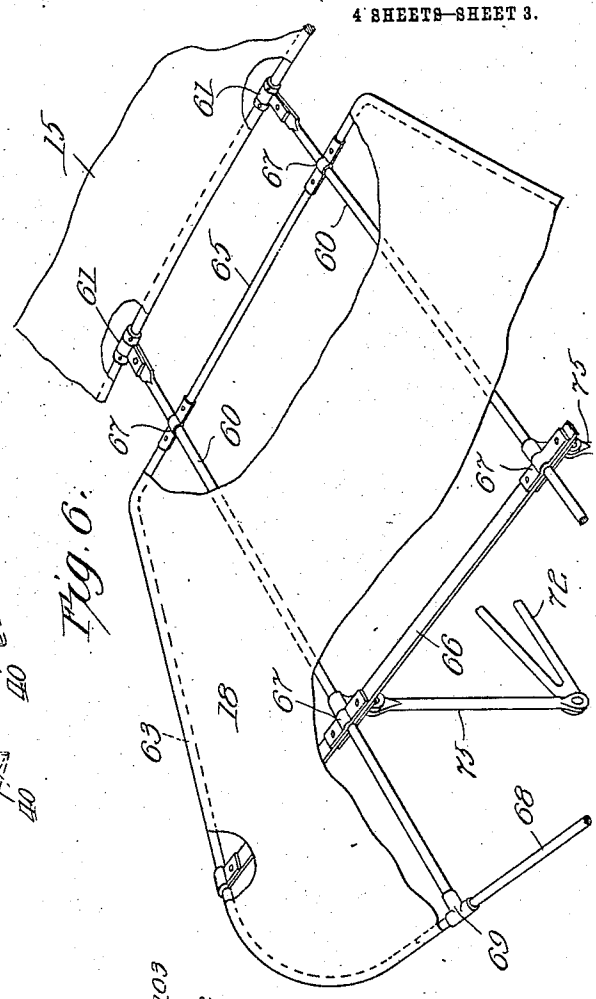

Fig. 6.

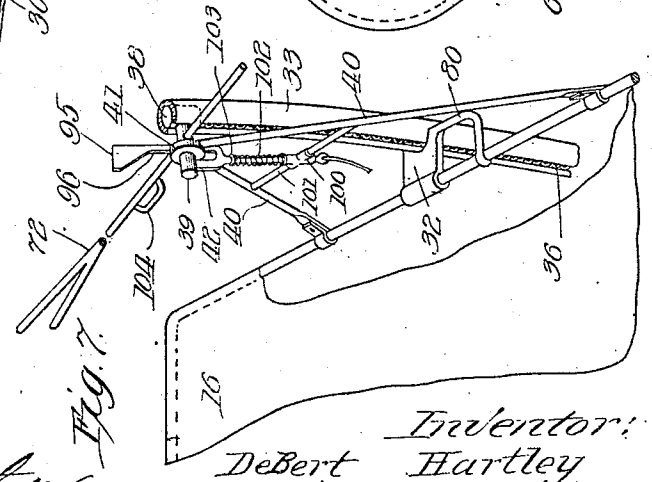

Fig. 7.

Witnesses:

Harry S. Gaither

William Goldberger.

Inventor:

DeBert Hartley

by William L. Hall atty

DE BERT HARTLEY.

FLYING MACHINE.

APPLICATION FILED OCT. 3, 1910.

1,068,651.

Patented July 29, 1913.

4 SHEETS—SHEET 4.

Fig. 13.

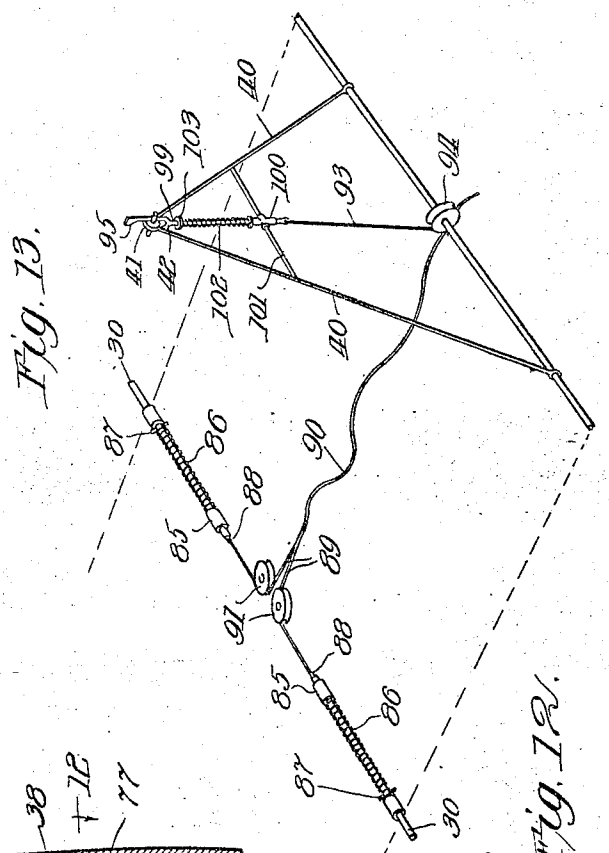

Fig. 11.

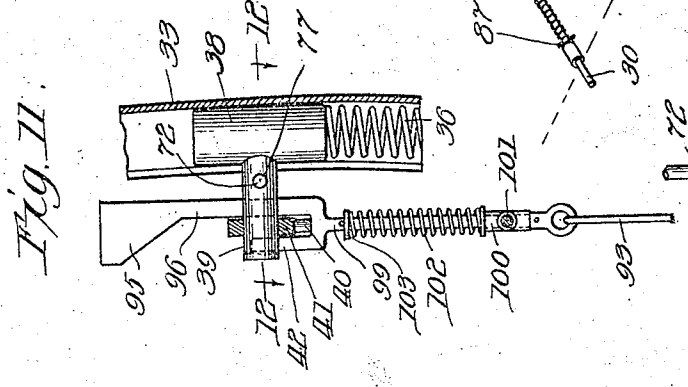

Fig. 12.

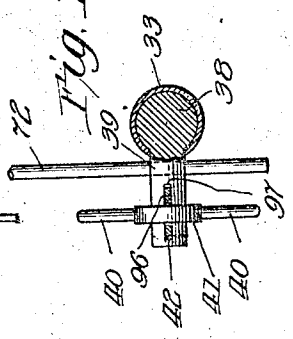

Witnesses:

Harry S. Gaither

William Goldberger.

Inventor:

DeBert Hartley

by William L. Hall.

atty

UNITED STATES PATENT OFFICE.

DE BERT HARTLEY, OF CHICAGO, ILLINOIS.

FLYING-MACHINE.

1,068,651. Specification of Letters Patent. Patented July 29, 1913.

Application filed October 3, 1910. Serial No. 584,980.

To all whom it may concern:

Be it known that I, DE BERT HARTLEY, a citizen of the United States, and a resident of Chicago, in the county of Cook and State of Illinois, have invented certain new and useful Improvements in Flying-Machines; and I do hereby declare that the following is a full, clear, and exact description thereof, reference being had to the accompanying drawings, and to the characters of reference marked thereon, which form a part of this specification.

This invention relates to improvements in that type of heavier-than-air flying machine known as aeroplanes, wherein the weight is sustained by the reactions resulting in moving an aeroplane edgewise through the air at a small angle of incidence by mechanical power or other force.

Among the objects of my invention is to provide a construction and arrangement for automatically restoring the equilibrium of the machine upon occasion of the shifting of the center of gravity of the machine, due to the machine tipping out of its plane of flight for any reason, whereby such equilibrium is restored independently of manual control of the pilot, thereby leaving the pilot free to direct the steering movements of the machine and attend to the power plant. Such automatic balancing of the machine may be effected by means of a pivoted plane or planes so constructed and arranged that upon tilting of the machine, whereby its center of gravity is shifted, the said pivoted plane or planes will be acted upon by the pressure of the air through which the machine is moving in such manner as to restore the machine to equilibrium. Such automatic restoration to equilibrium may be effected to maintain or restore the machine in both horizontal and lateral equilibrium.

Another object of the invention, relating to the automatic restoring of lateral equilibrium, is the provision of laterally extending, pivoted planes, elongated transversely to the line of flight, and pivoted at such points to the body of the machine that upon lateral shifting of the machine, and a consequent shifting of the center of gravity thereof, the said pivoted planes act automatically in a manner to restore the lateral stability or equilibrium of the machine.

Another object of the invention relating to the automatic restoring of equilibrium is the provision of guide tubes or bars for the pivoted planes, rigid with and forming a part of the frame of the machine and carrying springs arranged to act upon the pivoted planes in opposition to the air pressure on the lower sides of the planes to hold the planes normally in position for flight and to restore equilibrium, said springs being arranged to be adjusted to equalize the area of the pivoted planes to different loads on the machine.

Another object of the invention is to provide a simple and effective means for steering the machine vertically in line of its flight through the air, so arranged that the steering means or elevator may operate to automatically restore the longitudinal equilibrium of the machine.

Another object of the invention is to provide an exceedingly simple and effective means for steering the machine laterally in its course, or from one side to the other of a direct line of flight, to describe lateral curves.

Another object of the invention is to provide means for laterally steering the machine, arranged to restore longitudinal equilibrium of the machine.

Another object of the invention is to arrange a connection between the laterally extending pivoted planes and a following plane or rudder in such manner that manual power applied to the lateral planes to swing them on their axes has the effect to twist or tilt the following plane in a manner to change the lateral direction of flight of the machine.

Another object of the invention is to provide a connection between such lateral pivoted planes and a following plane, so arranged as to produce an action in the following plane which coördinates with the lateral planes to assist in restoring the lateral equilibrium upon occasion of lateral shifting of the machine and consequent shifting of the center of gravity.

Another object of the invention is to provide an arrangement of spring mounted planes constructed to automatically restore equilibrium of the machine in the event of the changing of the center of gravity of the machine, while at the same time being mounted and arranged to permit the plane members, having the automatic functions described, to be manually operated to control the machine at the will of the pilot.

Another object of the invention is to effect

an arrangement between the pivoted lateral planes and a following plane in such a way that said following plane may, by manipulation of the pivoted planes, be swung upwardly to change the course of the machine from a descending line of flight to an ascending line when the machine is being prepared to alight upon the ground, and thus enable the machine to approach the ground at such angle and speed as to permit it to land smoothly and without bringing excessive shocks and jars on the machine.

Another object of the invention is to provide an exceedingly simple and light, yet strong truss frame which carries the main plane of the machine and the car or like device and to which the lateral planes are pivoted.

Another object of the invention is to provide means for quickly stripping or detaching the lateral, pivoted planes from the machine so that said planes may be quickly removed when the machine is in flight, in the event that one of said planes becomes disabled, and the arrangement of the main plane and coördinating controlling planes, as the elevator and rudder, is such that the machine thus stripped of its lateral planes may be safely steered to the earth

Other objects of the invention are to improve and simplify various details of the machine, and the invention consists in the matters hereinafter set forth and more particularly pointed out in the appended claims.

In the drawings, Figure 1 is a plan view of a flying machine embodying my invention. Fig. 2 is an enlarged vertical sectional view on line 2—2 of Fig. 1. Fig. 3 is a longitudinal vertical section on line 3—3 of Fig. 2. Figs. 4 and 5 are diagrammatic views illustrating the relative positions of the pivoted and following planes, indicating in full and dotted lines the relative positions thereof which they assume in different operations of the machine. Fig. 6 is a broken perspective view of the following plane or rudder. Fig. 7 is a perspective detail illustrating the hinged connection of one of the pivoted planes with its yielding balancing elements and a part of the connection between the said pivoted plane and the following plane or rudder. Fig. 8 is a detail illustrating the device for sustaining the advancing plane or elevator, by means permitting it to be actuated to steer the machine in a vertical direction and to also automatically restore longitudinal equilibrium of the machine. Fig. 9 is a section on line 9—9 of Fig. 8. Fig. 10 is a detail, partially in section, of the device for yieldingly holding the pivoted planes in operative position. Fig. 11 is a detail of the means for detachably connecting the inner ends of the pivoted planes to their balancing yielding elements or spring devices and for releasing them therefrom. Fig. 12 is a section on line 12—12 of Fig. 11. Fig. 13 is a perspective view illustrating the system of cables and attaching devices for quickly stripping the pivoted planes from the machine.

As shown in said drawings, 15 designates what may be termed the central or body plane of the machine; 16, 16 laterally and oppositely extending planes which are arranged transversely to the line of flight and are pivoted near their inner ends to the machine frame; 17 a vertically swinging elevator or advancing plane located in the front of the machine for the purpose of steering in vertical directions, and 18 a horizontal following plane or rudder arranged at and hinged to the rear of the main plane for steering in lateral directions, and also arranged to modify the vertical direction or line of flight of the machine. The various planes mentioned are herein indicated as made of single thickness material for the purpose of simplifying the drawings; but it will be understood that in practice any or all of said planes may be of the usual trussed or double surface construction and formed with such curves as may be determined most effective.

The main or central plane 15 is supported on a rigid trussed frame, consisting as herein shown, of the transverse trusses 19, 19, arranged one at the front and the other at the rear of the body, and each comprising upper and lower arched or trussed members 20, 20 connected by vertical struts 21, 21. The main plane 15 is attached to the upper members 20 of the trusses, and conforms laterally to the curve of said members, and is preferably parabolically curved from front to rear.

22 designates a car, or other carrying device, for the pilot and passengers which extends from front to rear of the machine, and is connected at its front and rear ends to the lower sides of the trusses 19, 19 at the points 23, (Fig. 3) said car constituting a rigid connection between the lower sides of the trusses. The car is closed at its sides and bottom so that it may float in water and is provided with a rear and two front supporting wheels 25, 26, respectively, whereby it may be supported and moved from place to place on the ground, and upon which the machine is propelled forwardly under its power to obtain the speed required to raise the machine from the ground in starting the same. The two front supporting wheels 26 are mounted on axles 27, 27 connected in any suitable manner to the car, and the rear supporting wheel is preferably mounted on a spring arm 28, or other suitable spring device, whereby to cushion the impact of the car against the ground when alighting. The front and rear sides of the car are in-

clined upwardly from the front supporting wheels, the front inclined surface 29 being arranged to assist in moving the machine out of a body of water into which it may alight when motive power is impressed upon the machine to drive it forwardly.

The pivoted planes 16, as herein shown, and as preferably made, have flattened side and end marginal portions, and are transversely and longitudinally curved on their under sides, between their flattened marginal portions, the front and rear curvature being preferably that of a parabola. The said planes 16 are pivoted to the ends of the trusses 19 by means of pivots 30, 30 located at the front and rear margins of the wings and trending in the line of the flight or advance of the machine, and which engage suitable bearings or eyes formed in the outer ends of the trusses. The inner ends of the swinging planes extend between the trusses and beneath the main or body plane and their points of pivot are located nearest their inner ends, they being herein shown as located substantially one-third of the distance from their inner to their outer ends, so as to give more sustaining area on their outer than their inner ends. At the inner ends of said pivoted planes are arranged notched guide pieces 32 which engage upright guide tubes 33, 33 at the sides of the car and rigid with the trussed frame structure. Said guide tubes are curved at their central portions on arcs concentric to the pivotal axes of the swinging planes so as to maintain their guiding action on the pivoted planes in all positions of the latter. Arranged within each of said guide tubes is a spiral expansive spring 36, which is admitted to the tube through the lower end thereof, said lower end being closed by a screw-threaded plug 37. Located within the tube above said spring is a follower 38 that is provided with a lug 39 which extends laterally through and slides in a longitudinal slot in the tube. The inner end of each pivoted plane is connected with said stud by means of a bail or yoke 40 pivoted at its lower end to said plane and provided at its upper end with an eye 41 which fits over said lug and is confined thereon by a removable key 42 fitted in a transverse opening in the lug laterally outside of the eye. The springs 36 act expansively, through the followers 38 and bails 40, in opposition to the pressure of air beneath the planes to normally maintain the planes in position for flight, but yield to permit the planes to change their angles to the main plane upon occasion of shifting of the center of gravity of the machine, and when the springs return the planes to normal position equilibrium of the machine is restored. The springs are placed under compression when the planes change their angle as described, and the power of the springs acts, when returning the planes to normal position to restore equilibrium, as set forth. The compression of the springs 36 may be varied through the medium of adjusting bolts or screws 44 which are screw-threaded axially through the plugs 37 and are provided at their upper ends, within the tubes, with swivel heads 45 that bear against the lower ends of the springs. Through the effect of the adjustment described the pressure on the inner ends of the swinging planes may be accurately adjusted to suit the weight of the machine and its load, so as to normally hold said swinging planes in their operative positions for flight against the upward pressure of the air beneath the same, while permitting the outer ends of the planes to be swung upwardly, against the action of the springs, either by manual power or upon occasion of abnormal pressure on the lower sides of the planes due to tilting of the machine. The adjustment of the springs may be such that the swinging or pivoted planes 16 may assume as a normal position a dihedral angle relatively to each other, and this dihedral angle is adapted to be changed either manually or automatically. The bails 40 attached as they are to the pivoted planes at laterally separated points serve to brace or stiffen the inner ends of said planes.

It will be observed that the transversely arranged trussed frame constitutes an exceedingly rigid support for the pivoted planes and permits said frame to be made exceedingly light as compared to its strength. It will also be observed that by pivoting the planes 16 adjacent to their inner ends so as to bring the larger parts of the plane surfaces laterally outside their pivots, the planes are made exceedingly sensitive to unbalanced pressures, due to shifting of the center of gravity of the machine, so that their action to maintain and restore equilibrium is delicate and positive.

The elevator or advancing plane 17 for changing the vertical direction of the machine is pivoted on a transverse bar 47 that is fixed in the outer end of a nose, consisting of V-shaped braces 48 which extend forwardly from and are fixed rigidly to the forward truss 19 of the frame. Said elevator has rearwardly extending arms 49 that are pivoted to said bar in any suitable manner. An actuating bail or yoke 50 is rigidly connected to said arms 49 and extends rearwardly beneath the main plane and is provided at its rear end with an eye 51, (Figs. 3, 8 and 9) which engages over an upright guide bar 52 extending between the car and the main plane. Said guide bar has a curved portion engaged by said eye which is concentric to the pivotal axis of the elevator so as to permit the bail or yoke to swing freely upwardly and downwardly. Surrounding said guide bar 52, and arranged

between the same and an adjusting nut 55, screw-threaded to the lower end of said guide bar, is a spiral, expansively acting spring 56 which acts upwardly upon the bail or yoke 50 in opposition to the pressure of air beneath the elevator to hold the elevator in a predetermined or normal position during flight. The arrangement of the spring and its manner of adjustment provides means for maintaining the elevator in its normal position against the pressure of air beneath and relative to the weight of that part of the machine and its load thrown on the same. Said spring also permits the elevator to be swung upwardly or downwardly to change the vertical direction of the machine as desired, and further enables the spring mounted elevator to automatically restore the longitudinal equilibrium of the machine in case the machine tends to tip forwardly, in the same general manner as the spring mounted planes 16 restore lateral equilibrium. The under surface of said elevator is preferably curved both longitudinally and laterally, the longitudinal or front to rear curve being preferably that of a parabola.

Referring now to the construction and arrangement of the following plane or rudder 18 and to the manner of its operation, said plane is pivoted at its forward edge to the following edge of the main plane to swing vertically for the purpose of modifying the vertical direction of flight of the machine, and the construction of said plane is also so arranged as to permit said plane to be twisted or warped about its longitudinal axis to change the lateral direction of flight of the machine. The said following plane or rudder is shown as being fan shaped, being wider at its rear than at its front end. It is parabolically curved from front to rear and is also preferably transversely curved, the margins being substantially flat. The frame of said following plane, as it is herein shown, comprises two rearwardly extending bars 60 that are hinged at 61 to the following edge of the main plane, and have only a vertically swinging movement, and a closed frame 63 which is supported on said bars and upon which the plane surface is stretched. The frame 63 is supported on the bars 60 in a manner permitting a slight rocking or twisting movement thereon so as to permit the plane, which is stretched on the surrounding frame, to be given the warping or twisting movement, above referred to. For this purpose the forward member 65 and an intermediate member 66 of the frame 63 are provided with clips 67, 67 through which the hinged bars 60, 60 loosely extend, and the rear member 68 of the frame is provided with sockets 69 into which the rear ends of the said bars 60 loosely fit. The said following plane or rudder is adapted to be swung about its hinges 61, and to be warped about its longitudinal axis, for the purposes specified, by the following devices: 72, 72 designate vertically swinging levers arranged beneath the following plane or rudder and pivoted between their ends to a horizontal pivot bar 73 that is mounted in the rear end of a tail consisting of V-shaped frames 74, 74 which extend rearwardly from and are fixedly attached to the main trussed frame (Figs. 1 and 3). The rear or shorter ends of the levers are connected by links 75 to the longitudinal bars 60 of the following plane or rudder frame, near their rear ends; one of said links being thus connected to the following plane at one side of its longitudinal axis and the other at the other side thereof. The forward ends of said levers 72 extend beneath the main plane and may be operatively connected in any suitable manner to the yielding balancing devices of the pivoted planes so that said pivoted planes and following plane or rudder may have coordinating movement for a purpose hereinafter to be described. Such connnection, as herein shown, consists of the eyes 77 formed in the lugs 39 of the followers 38, through which eyes the forward ends of the levers loosely extend, to produce, in effect, a swiveling connection between the levers and said lugs.

With the arrangement shown, when the forward ends of both levers 72 are simultaneously depressed, the following plane or rudder is swung upwardly as a whole about its hinges 61, and in this position serves to steer the machine in vertical direction. If however one of the levers be swung downwardly while the other remains stationary, the following plane or rudder will be twisted or warped about its longitudinal axis, one of the rear corners of said plane being thrown upwardly while the other rear corner is thrown downwardly. For instance, if the right hand lever 72 be swung downwardly while the left hand lever remains stationary, the right rear corner of the following plane or rudder will be thrown upwardly and the left rear corner thrown downwardly. This movement of the rudder is permitted by reason of the resiliency in the swinging bars 60 and also by reason of the loose or rocking connection of the frame 63 with the bars 60 at the points 67 and 69.

In some instances arrangements may be made to manually operate the following plane or rudder either by directly grasping the operating levers 72 or by means of other operating mechanism connected therewith. As herein shown said rudder operating levers are provided with hand holds 104 by which the rudder may be thus manipulated. When the rudder 18 is applied to the machine herein shown, having the pivoted, lateral planes, such independent manual op-

eration of the rudder will be effective when the pivoted planes are detached from the machine, as will be hereinafter described. The said rudder may, however, be applied to machines in which the steering will be effected by direct manual manipulation of the levers 72, or other analogous operating devices. When the rudder is operatively connected, through said levers 72 and spring balance device, with the pivoted planes, the tilting of said latter planes on their pivots serves to simultaneously operate the rudder or following plane with the pivoted planes, whereby said following plane or rudder coordinates with said pivoted planes, either to restore lateral equilibrium to the machine, upon occasion of the shifting of the center of gravity thereof, or to steer the machine. The means whereby said pivoted planes, and the following plane or rudder coordinate to produce these results will be best understood from an inspection of Figs. 4 and 5.

The full line positions of the pivoted planes and following plane shown in Fig. 4 are the positions which these parts assume when the machine moves in a straight line of flight, it being understood that the advancing edges of the planes are slightly tilted upwardly, with the proper curvature, to give the proper angle of incidence of the planes to the air. During such time of straight flight the front elevator 17 will be adjusted in a plane substantially parallel to that of the other planes. If now for any reason the machine be tilted laterally about its longitudinal axis, as for instance if the pilot should shift his weight toward one side of the machine, or if an unbalancing pressure be exerted against the under side of one of the pivoted planes 16, an unbalanced weight will be thrown upon that swinging plane 16 toward which the center of gravity has been shifted. When the machine occupies the tilted position assumed, the machine, as a whole, will be laterally inclined to its normal plane so that, if the planes were fixed or immovable, the machine would tend to glide or skid in a slanting direction toward the earth. By reason of the pivotal mounting of the planes 16, having unbalanced areas on the opposite sides of their pivots, the pivoted plane toward which the center of gravity has been shifted will be tilted on its pivot to swing it to the position shown in the dotted line position *a* indicated in Fig. 4, and, through its connection with the following plane or rudder, will warp or twist the adjacent rear corner of said rudder upwardly to the dotted position *b* shown in Fig. 4. The automatic upward tilting of the plane 16 toward which the machine tilts has the effect to maintain said latter plane and the adjacent side of the following plane or rudder substantially parallel to the horizontal, and to increase the angle of incidence thereof to the air in the slanting path in which the machine tends to glide or skid and, inasmuch as the opposite pivoted plane has not changed its position on its axis, the reaction of the overbalanced weight, shifted to the tilted plane 16, on the sustaining body of air will have the effect of arresting the gliding or skidding movement. The planes when swung to the dotted line positions *a*, *b*, indicated in Fig. 4, were swung to these positions against the action of the balancing springs or yielding elements 36. Thereafter the said balancing springs or yielding elements 36 returns the pivoted planes and rudder to normal positions with respect to the other planes and restore the lateral equilibrium of the machine. It will of course be understood that if the machine be tilted in the opposite direction by shifting of the center of gravity toward such other direction the other, or right hand pivoted, plane will operate, in conjunction with the right hand side of the following plane or rudder to restore the machine to lateral equilibrium in the same manner as before described. It will thus be seen that the lateral stability of the machine is at all times automatically restored without any attention whatever on the part of the pilot, so that the pilot may give his full attention to steering and driving the machine.

The spring balanced elevator 17 acts in a generally similar manner to maintain the longitudinal equilibrium of the machine. As before stated, the balancing spring 56 of the elevator is so adjusted with respect to the weight which it carries and to the air pressure beneath the same as to be maintained in a predetermined position relatively to the other planes during flight. If through any disturbing influence the machine is tilted forwardly so as to throw abnormal weight on the elevator, the reaction set up in the air beneath the elevator will have the effect to upwardly tilt said elevator against the action of the spring 56 and thereby steer the machine upwardly to restore the machine to its normal line of flight, and the return of the elevator under the influence of the balancing spring will restore equilibrium to the machine. The following plane or rudder 18 is also normally held in operative position for flight by the effect of the springs 36 opposing the action of the air pressure beneath the plane, and said spring held plane or rudder will operate in the general manner of the elevator to restore longitudinal equilibrium to the machine should the machine tip backwardly by shifting of the center of gravity toward the rear of the machine. This effect of the rudder or following plane will be manifested whether or not the lateral planes

be in place or detached from the machine. In fact the spring or other yielding balance of the elevator and rudder described may operate in connection with various other types of aeroplanes having different means for maintaining and restoring lateral balance, and the invention, so far as it relates to the rudder and elevator, is not limited to the type of machine herein shown.

The pivoted planes 16 and the following plane or rudder 18, in addition to their function of automatically restoring lateral equilibrium to the machine, as above described, serve also as means for laterally guiding the machine in flight. For this purpose the inner ends of the swinging planes, adjacent to the car 22, may be provided with the handles 80, Fig. 7, which are adapted to be grasped by the hands of the pilot to steer the machine. If, for instance, it be desired to steer the machine to the right, from the position assumed in full lines in Fig. 4, as viewed from the pilot's seat, the pilot grasps the handle 80 of the pivoted plane at the left hand side of the machine and tilts said plane to the dotted line position *a* shown in Fig. 4. This tilting movement of the plane 16 causes the adjacent rear corner of the following plane or rudder to be warped or twisted upwardly and the opposite rear corner of said rudder to be warped or twisted downwardly. In this position of the rudder the angle of incidence to the air is increased on the right hand side of the rudder and is decreased on the left hand side thereof. This has the effect to retard the speed of that side of the machine presenting the larger angle of incidence to the air and to accelerate the speed of the machine on the side thereof presenting the smaller angle of incidence. The result of this is that the machine turns or pivots about a vertical axis toward the side presenting the larger angle of incidence. When the machine is to be turned toward the left the pilot grasps the handle 80 of the right hand pivoted plane to tilt the same on its axis and to warp the following plane or rudder in a direction opposite to that indicated by the dotted line *b*, Fig. 4.

If when preparing to alight the machine should approach the ground at such an angle and at such speed that the machine may not be readily controlled by the elevator 17, whereby the landing would be rendered uncertain and hazardous, the pivoted planes 16 may be tilted on their pivots to a more or less acute angle, as indicated by the full and dotted lines in Fig. 5, and such tilting of the planes about their pivots has the effect to bodily swing upwardly the rear end of the following plane or rudder about its hinges. This position of the rudder has the effect to brake the speed of the machine and also acts, either by itself or in conjunction with the elevator 17, to elevate the nose of the machine so as to incline the flight upwardly. Thus by proper manipulation of the pivoted planes and of the elevator in this manner the machine may be made to approach a desired landing spot at a suitably long angle and at a suitably slow speed for safe landing. When thus descending in a machine from which the pivoted planes have been stripped, in a manner hereinafter to be described, or when descending in a machine not having such pivoted planes, and having other means for maintaining and restoring lateral equilibrium, the said following plane or rudder may be manipulated by direct manual control, in conjunction with the elevator, to effect a safe and proper landing as described.

I have provided means for stripping the lateral, pivoted planes from the machine in case of injury to one of the planes, or in case for any other reason it is desired to demount the lateral planes. If, for instance, during flight one of the lateral planes should become disabled and useless to perform its function, the effect of the other plane would be to turn the machine on its longitudinal axis and throw it entirely out of the control of the other planes so that the machine would drop to the ground. In order to meet this contingency I have provided means for disconnecting said lateral planes at their pivots 30 and also at their connections with the studs 39 of the followers 38. A convenient mechanism for effecting this result is herein shown and is made as follows: Each of said pivots 30 is a two-part pivot, as best shown in Figs. 1 and 13, and the members of each pivot are arranged in line and separated from each other at their inner ends. They have longitudinal guiding engagement in bearings 85, 85 fixed in any suitable manner on the planes 16. The said two-part pivots are normally projected outwardly for engagement with the bearings in the trusses by means of spiral springs 86 surrounding said members and interposed between the inner bearings 85 and pins 87 extending through said pivots. The inner ends of said pivots are formed with eyes 88 to which are connected the two branches 89 of a cable 90, said branches passing about pulleys 91, 91 mounted on the plane between said pivot members. The cables 90 extend inwardly over the planes 16 to the car. They are provided at the inner ends of the planes with other branches 93 which extend upwardly to the connection of the bails 40 with the studs 39, said branches 93 passing under suitable pulleys 94 at the inner ends of said planes. The upper ends of said branches 93 are connected with devices for releasing or pulling downwardly the locking keys 42 which lock the bail eyes on the studs 39, and

also with stripping devices by which the bail eyes are stripped from said studs when the locking pins are released. The stripping devices herein shown consist of wedges 95, arranged above the studs and formed on vertical bars 96 that pass through vertical slots 97 which extend almost to the outer ends of the studs 39. The lower ends of said bars 96 are made integral with the locking pins 42, and the fixtures thus constructed terminate at their lower ends in guide stems 99 which extend downwardly through and have vertical sliding engagement in guide sleeves 100 that are supported on cross bars 101 which extend between the arms of the bails 40. Spiral, expansively acting springs 102 are interposed between said guide sleeves 100 and shoulders 103 formed in any suitable manner on the stems 99, said springs serving normally to hold the locking pins in their uppermost or locking positions. The lower ends of said guide stems are formed with eyes to which are attached the upper ends of the branch cables 93. The bars 96, which carry the wedges 95, are made of such length that the wedges will not engage the bail eyes 42 to force them from the studs until after the pins 42 are withdrawn from the slotted lugs and below the planes of the eyes. Continued movement of the bars and wedges, after the pins have been thus released, serves to strip the bail eyes off of the lugs and thereby release the bails and the inner ends of the pivoted planes from the balancing spring devices.

The system of cables for operating the stripping devices described is so arranged that the branches 93 are maintained normally, taut, while the main cables 90, lying along the pivoted planes are slack, as indicated in Fig. 13. Therefore upon pulling the inner ends of the cables 90, the first effect is to release the pins 42 and strip the bails from the studs 39, after which, in the continued pull on the cables, the pivot members 30 are drawn inwardly to release them from their bearings at the outer ends of the trusses. When so released the planes are free to drop from the machine. It is thus evident that said planes, while being reliably connected to the machine during use thereof, may be quickly stripped therefrom when the emergency arises, and may also be readily detached from the machine when it is desired to demount the machine for other purposes, as for the purpose of storage.

The propeller 105 is shown as located at the front of the machine just in rear of the elevator 17, and is driven, through its shaft 106, by any suitable form of motor 107 mounted on a part rigid with the trussed frame. The propeller shaft 106 is mounted in a suitable bearing fixed in the forwardly extending nose of the machine. The propeller may, however, be otherwise located, as desired and more than one propeller may be employed. It will be furthermore manifest that the structural details of the machine may be varied in other respects without departing from the spirit of the invention, and the invention is not limited to the illustrated details, except as such details are hereinafter made the subject of specific claims.

I claim as my invention:—

1. An aeroplane comprising tilting supporting planes, pivots between the ends of said planes and trending in the line of advance of the machine, upon which these planes may be independently tilted by change of center of gravity of the machine, and means coöperating with the inner ends of said planes to restore them to normal position and reëstablish equilibrium when they have been so tilted.

2. An aeroplane comprising tilting supporting and controlling planes, pivots between the ends of said planes and trending in the line of advance of the machine, upon which pivots these planes may be independently tilted by change of the center of gravity of the machine, means to automatically coöperate with the inner ends of said planes to restore them to normal position and reestablish equilibrium when they have been so tilted, and means at the inner ends of said planes for manually controlling said planes to direct the flight of the machine.

3. In an aeroplane, a main frame provided with bearings, oppositely directed, elongated supporting, balancing and steering planes independently hinged to said bearings and swingable independently of each other, said planes being in themselves immovable except as to warping and their hinged connection to said frame, and means coöperating with said planes to restore them to normal position and reëstablish equilibrium after they have been tilted on their bearings.

4. In an aeroplane, a pivoted plane having its lower side presented to the air, a fixed guide for the inner end of said pivoted plane, a guide projection on said plane for engaging said fixed guide, and a spring associated with said guide and acting on the plane in opposition to the pressure of air beneath the outer end of the same to normally hold the plane in operative position for flight, and arranged to permit the plane to automatically change its angle upon the shifting of center of gravity of the machine, said spring acting to return the plane to normal operative position and to thereby restore the equilibrium of the machine.

5. An aeroplane comprising a main plane and its frame and opposed lateral planes pivoted between their ends to said main plane and adapted to occupy different dihe-

dral angles relatively to each other and the main plane with means to independently change said dihedral angles.

6. An aeroplane comprising a main plane and its frame and opposed lateral planes pivoted to said main plane and adapted to occupy different dihedral angles relatively to each other and the main plane, yielding balancing means connecting the inner ends of said lateral planes to the frame, and means associated with the balancing means whereby the dihedral angles of said lateral planes, relatively to each other, may be changed.

7. An aeroplane comprising a main plane and its frame, the latter provided with side bearings, and laterally opposed supporting, steering and balancing planes pivoted between their ends to said bearings, with their areas outside their pivots overbalancing the areas thereof inside their pivots.

8. An aeroplane comprising a main plane and its frame, the latter provided with side bearings, and laterally opposed supporting steering and balancing planes pivoted between their ends to said bearings, said frames embracing upright guide members, and guide devices on the pivoted planes to engage said guide members.

9. An aeroplane comprising a main plane and its frame, laterally opposed sustaining planes pivoted between their ends to the frame and each having unbalanced areas at the opposite sides of its pivot, and yielding balancing means acting against the pivoted planes in opposition to the unbalancing pressure of air beneath said planes.

10. An aeroplane comprising a main plane and its frame, laterally opposed planes arranged with their inner ends beneath the main plane and pivoted between their ends to said frame at points in their lengths nearest adjacent to their inner ends, and adjustable yielding balancing means acting on the inner ends of the pivoted planes.

11. An aeroplane comprising a frame, two laterally opposite planes pivoted to said frame, upright slotted guide tubes carried by the frame for guiding the pivoted planes in their tilting movements, springs within said tubes, and connections between the springs and said pivoted planes, whereby said springs act against the pivoted planes in opposition to the pressure of air beneath said planes.

12. An aeroplane machine comprising a main plane and its frame, the latter provided with side bearings, and laterally opposed supporting steering and balancing planes pivoted between their ends to said bearings with their areas outside their pivots overbalancing the areas thereof inside their pivots, said frame embracing upright guide members, guide devices on the inner ends of the pivoted planes to engage said guide members, and bails pivoted at their lower ends and at laterally separated points to the inner ends of pivoted planes and having sliding connection with the guide members at points vertically separated from the guide device.

13. An aeroplane machine comprising a main plane and its frame, the latter provided with side bearings, and laterally opposed supporting steering and balancing planes pivoted between their ends to said bearings with their areas outside their pivots overbalancing the areas thereof inside their pivots, said frame embracing upright guide members, guide devices on the inner ends of the pivoted planes to engage said guide members, and bails pivoted at their lower ends and at laterally separated points to the inner ends of the pivoted planes, and springs associated with said guide members of the frame and acting on the unbalanced planes through the bails, for the purpose set forth.

14. An aeroplane comprising a main plane and its frame, the latter provided with side bearings, laterally opposed supporting, steering and balancing planes pivoted between their ends to said bearings with their areas outside their pivots overbalancing the areas thereof inside their pivots, said frame embracing upright, hollow, slotted guide posts, springs within said hollow posts, and bails connected to the inner ends of said pivoted planes, and operatively connected, through the slots of said posts, with said springs, whereby the springs act in opposition to the overbalanced areas of the planes.

15. An aeroplane machine comprising a main plane and its frame, the latter provided with side bearings, laterally opposed supporting, steering and balancing planes pivoted between their ends to said bearings with their areas outside their pivots overbalancing the areas thereof inside their pivots, said frame embracing guide posts, springs carried by the guide posts, and bails connected to the inner ends of said pivoted planes, and operatively connected with said springs, whereby the springs act in opposition to the overbalanced areas of the planes, and means for adjusting the springs to vary the action thereof on said pivoted planes.

16. An aeroplane comprising a main plane and its frame, laterally opposed supporting and balancing planes pivoted to said frame by releasable pivots, and means for withdrawing the pivots of said planes from the frame during flight to thereby strip said pivoted planes from the machine.

17. An aeroplane comprising a main plane and its frame, laterally opposed planes pivoted to said frame, yielding elements carried by said frame and connected to and acting upon said pivoted planes for

the purpose set forth, and a single manually operable device for each pivoted plane, connected to the pivots of said planes and to the connections between the yielding elements and said planes and arranged, by a continuous movement thereof, to disconnect the pivoted planes from the frame, first at their points of connection with said yielding elements and afterward at their pivots.

18. An aeroplane comprising a main plane and its frame, laterally opposed planes pivoted to said frame by spring held pi[illegible] members, yielding elements carried by said frame and operatively connected to and acting upon the pivoted planes, the connections between said pivoted planes and said yielding elements embracing a combined releasable lock and stripping device arranged, when the lock is released, to strip the planes from said yielding elements, and a single cable for each plane acting upon the spring held pivots of the plane and the locking and stripping device to release said parts in a continuous pulling movement of the cable to strip the pivoted planes from the machine.

19. An aeroplane comprising a main plane and its frame, laterally opposed planes pivoted between their ends to the frame, a following plane or rudder, and operative connections between the following plane or rudder and the inner ends of the pivoted planes constructed to operate the following plane upon a change of angle of the pivoted planes.

20. An aeroplane comprising a main plane and its frame, laterally opposed planes pivoted between their ends to the frame, a following plane or rudder constructed to be swung vertically and to be warped or twisted about its longitudinal axis, and operative connections between the inner ends of said pivoted planes and said following plane or rudder arranged to warp and to swing the following plane or rudder upon a change of angle of the pivoted planes.

21. An aeroplane comprising a main plane and its frame, laterally opposed planes pivoted to said frame, a following plane or rudder, operative connections between the following plane or rudder and the inner ends of the pivoted planes arranged to produce a predetermined coördinating operation of the rudder upon a change of angle of the pivoted planes relatively to the main plane, and yielding elements carried by the frame and acting against said operatively connected pivoted and following planes.

22. An aeroplane comprising a main plane and its frame, laterally opposed planes pivoted to said frame, a following plane or rudder hinged to the main plane and adapted to be swung vertically to change the vertical direction of the machine, and to be warped or twisted about its longitudinal axis to steer the machine laterally, and separate operative connections between the inner end of each pivoted plane and one side of the following plane, so constructed and arranged that the following plane is warped when one only of the pivoted planes is tilted upon its pivot and the following plane is swung upwardly when both pivoted planes are simultaneously tilted on their pivots.

23. An aeroplane comprising a main plane, laterally opposed pivoted planes having releasable pivots, a following plane or rudder connected to the main plane, operative connections between the pivoted planes and the following plane arranged to give steering motion to the latter plane upon the tilting of the pivoted planes on their pivots, spring elements acting on said operative connections between the lateral and following planes, and means to withdraw the pivots of the lateral planes to strip said planes from the machine without releasing the following plane or rudder from said spring elements.

24. An aeroplane comprising a frame, a main plane thereon, a hinged following plane or rudder adapted to be freely swung vertically about its hinge to change the vertical direction of the machine, and to be bodily warped or twisted about its longitudinal axis to steer the machine laterally, and separately actuable operating levers pivoted to the frame and connected one at each side of the following plane and extending forwardly beneath the main plane.

25. An aeroplane comprising a main plane and a horizontal, vertically swinging following plane or rudder at the following edge of the main plane, comprising rearwardly extending bars which are hinged to swing vertically, and a frame with a plane member stretched thereacross, said latter frame being mounted loosely on said bars, whereby the frame may rock on said bars to permit the rudder to twist or warp about an axis located between said bars.

26. An aeroplane comprising a main plane and a horizontal, vertically swinging following plane or rudder at the following edge of the main plane, comprising rearwardly extending bars which are hinged to the main plane to swing vertically, a frame with a plane member stretched thereacross, said latter frame being mounted loosely on said bars, whereby the frame may rock on said bars to permit the rudder to twist or warp about an axis located between said bars, and independently actuable operating devices connected each to one of said bars and extending forwardly beneath the main plane.

27. In an aeroplane, a main plane, a piv-

oted elevator at the front of the main plane for steering the machine vertically, a spring acting upon said elevator in opposition to the pressure of air beneath the elevator to normally maintain the elevator in operative position for flight, while permitting the elevator to change its angle upon shifting of center of gravity of the machine, and to return the elevator to operative position for flight to restore longitudinal equilibrium of the machine, and a guide for controlling the movement of the elevator, said spring being supported on said guide.

28. An aeroplane comprising a main plane and its frame, an elevator at the front of the main plane for steering the machine vertically, a following plane or rudder at the rear of the main plane for controlling the vertical and lateral direction of the machine, laterally opposed planes pivoted to the side of said frame, and yielding elements acting on said planes and elevator in opposition to air pressure on their lower surfaces to normally maintain them in operative position for flight, while permitting them to change their angles, upon shifting of the center of gravity of the machine, and to return the planes to operative position to restore the equilibrium of the machine.

29. An aeroplane comprising a frame composed of front and rear, rigidly connected trusses arranged transversely to the line of flight and having upper transversely curved members, a central plane extending between and attached to the trusses and transversely curved to conform to the upper members of the trusses, and laterally opposed supporting and balancing planes pivoted between their ends to the ends of said trusses.

30. An aeroplane comprising a frame composed of front and rear trusses arranged transversely to the line of flight, a central plane extending between and attached to the upper sides of the trusses, lateral supporting and balancing planes pivoted to the ends of said trusses, and a car construction extending between and attached to and depending principally below the lower sides of the trusses and constituting a rigid connection between the lower sides of the trusses.

31. An aeroplane comprising front and rear, rigidly connected trusses arranged transversely to the line of flight, a central plane extending between and attached to the upper members of said trusses, a nose rigid with and extending forwardly from the front truss and carrying bearings for a propeller shaft, a propeller shaft mounted in said bearing and laterally opposed supporting and balancing planes pivoted to the ends of said trusses and a rudder at the rear of the main plane.

In testimony, that I claim the foregoing as my invention I affix my signature in the presence of two witnesses, this 28th day of September A. D. 1910.

DE BERT HARTLEY.

Witnesses:

N. HENNINGSEN,

ALBERT STEINHAUSER.

Copies of this patent may be obtained for five cents each, by addressing the "Commissioner of Patents, Washington, D. C."