United States Patent [19]

Lockard

[11] **3,736,390**

[45] **May 29, 1973**

[54] **ROTARY SWITCH ASSEMBLY WITH PRINTED CIRCUIT ROTOR AND MULTILAYER HOUSING FEATURES**

[75] Inventor: **Joseph LaRue Lockard,** Harrisburg, Pa.

[73] Assignee: **AMP Incorporated,** Harrisburg, Pa.

[22] Filed: **Dec. 10, 1971**

[21] Appl. No.: **206,665**

[52] **U.S. Cl.** .....**200/11 DA,** 200/14, 200/11 G, 200/166 CT, 200/168 K

[51] **Int. Cl.** **H01h 19/58,** H01h 21/78

[58] **Field of Search** .....200/11, 14, 166 SD, 200/166 CT, 166 J, 168 K, 11 DA, 11 K, 11 G, 168 T

[56] **References Cited**

UNITED STATES PATENTS

3,558,834	1/1971	Zielke	200/11 TW
3,504,139	3/1970	Long	200/11 TW
3,030,460	4/1962	Huetten et al.	200/11 G
3,300,594	1/1967	Paine et al.	200/166 SD X
2,894,096	7/1959	Schacht	200/11 G X
3,478,180	11/1969	Bang	200/14 X

Primary Examiner—J. R. Scott

Attorney—William J. Keating, Ronald D. Grefe, Gerald K. Kita

[57] **ABSTRACT**

A rotary switch is provided which is adaptable for being stacked in multiple layers for multi-function use by a single control shaft. A printed circuit board and a brush member are supported in a dust-proof housing in contacting relation and means are provided for rotating one of the board and the brush relative to the other to any of a predetermined number of distinct positions. Additionally, the inputs and outputs of the switch are all aligned in a single plane.

32 Claims, 11 Drawing Figures

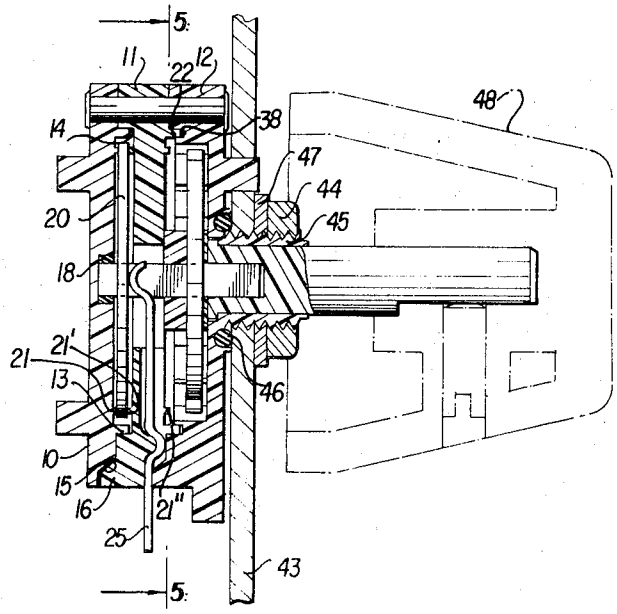

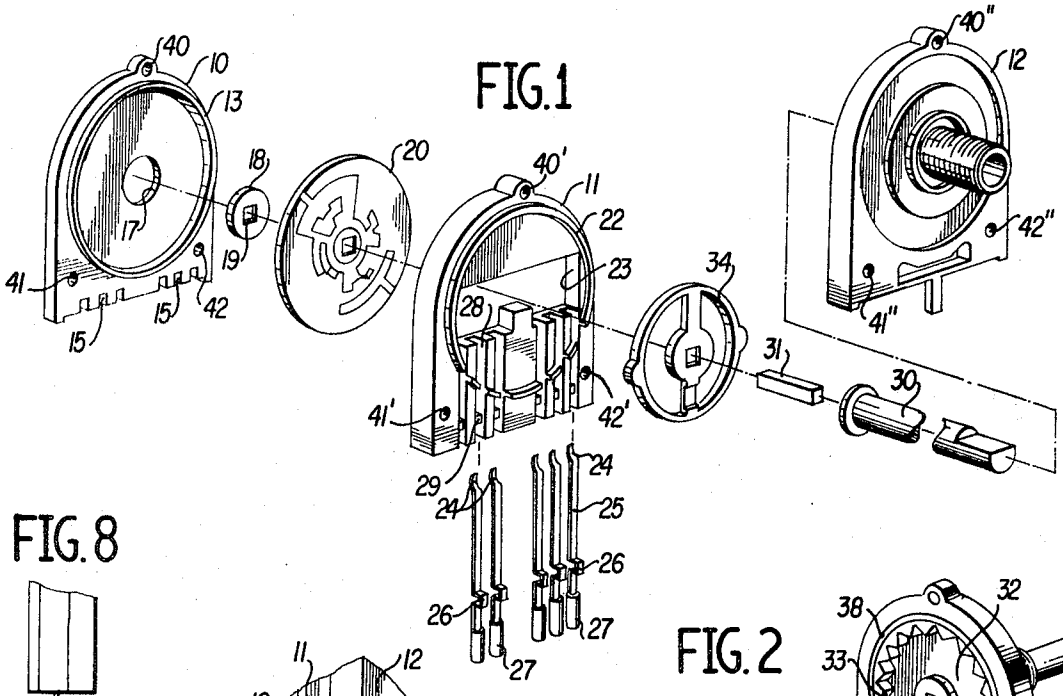

FIG. 1

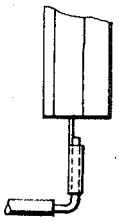

FIG. 8

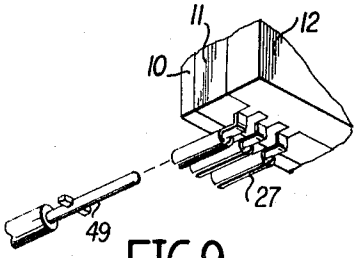

FIG. 9

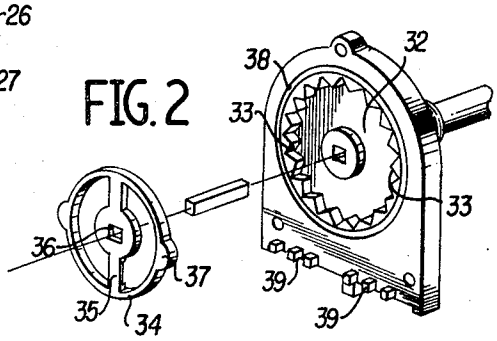

FIG. 2

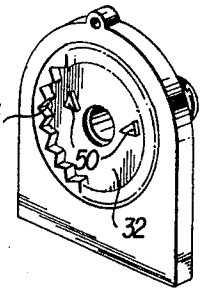

FIG. 3

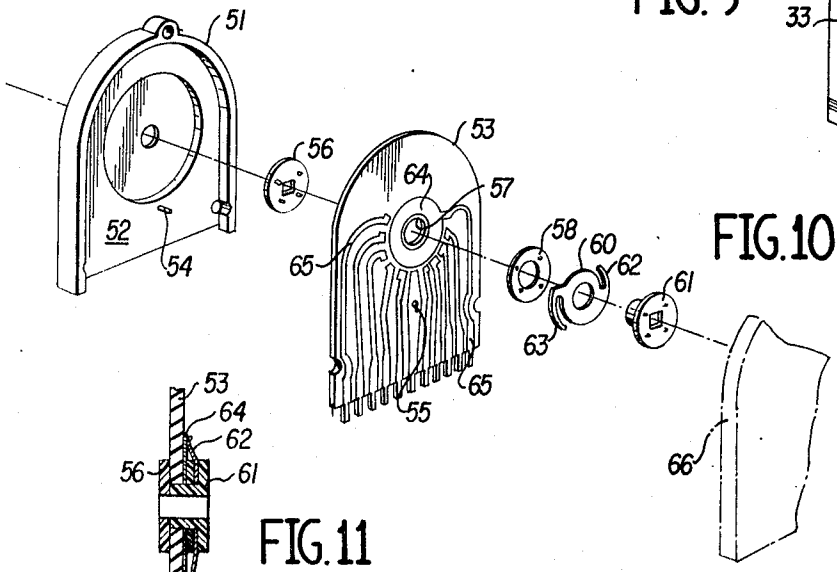

FIG. 10

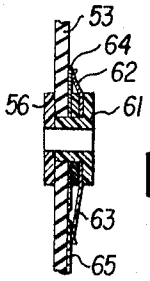

FIG. 11

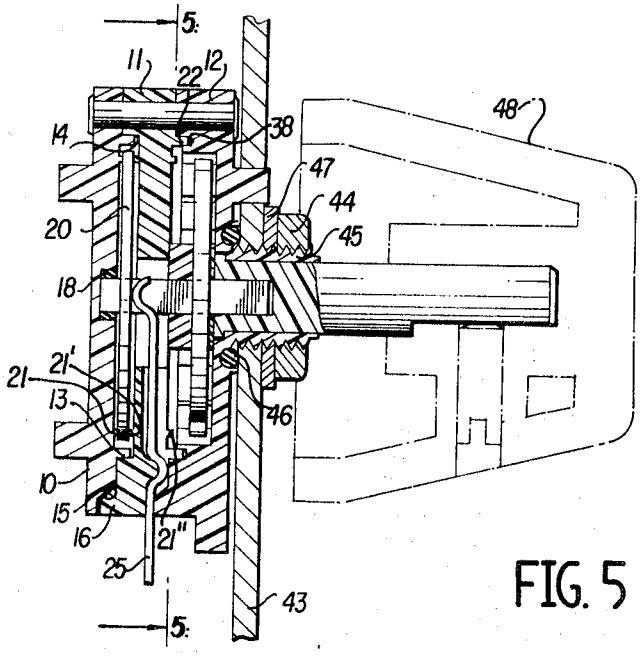

FIG. 4

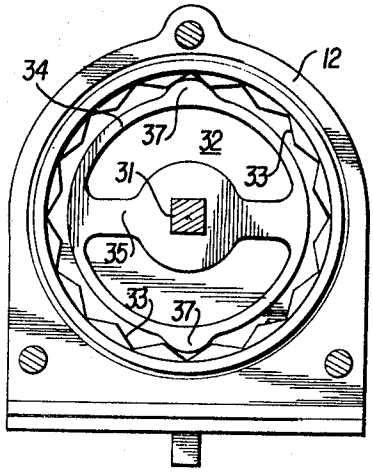

FIG. 5

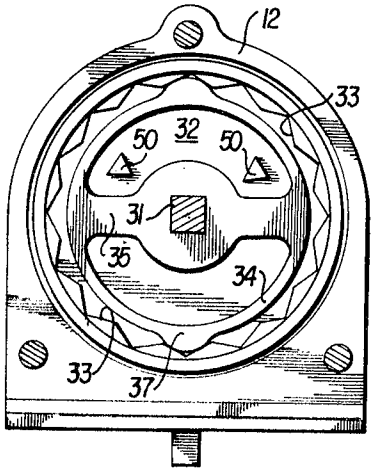

FIG. 6

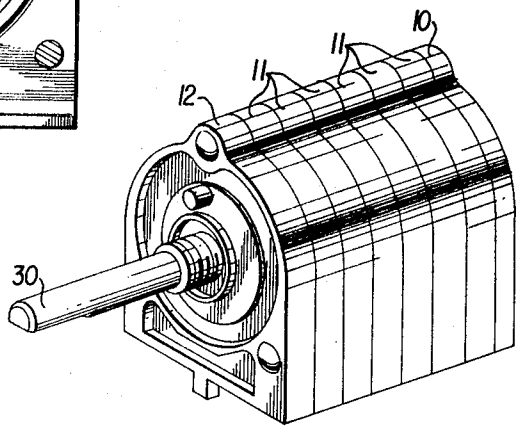

FIG. 7

ROTARY SWITCH ASSEMBLY WITH PRINTED CIRCUIT ROTOR AND MULTILAYER HOUSING FEATURES

BACKGROUND OF THE INVENTION

1. Field of the Invention

The present invention relates generally to rotary switches and more particularly to an improved multilayer rotary switch of compact construction for high-density switch applications.

2. Prior Art

In the past, rotary switches have been bulky and heavy usually hand-constructed items which were difficult to wire and were subject to being easily damaged if accidentally dropped, or even by dust and dirt in the storage or operational environments thereof entering the switch housing and causing short-circuiting to occur therein. These former switches accordingly were not entirely satisfactory for high-density applications for these reasons, but more primarily because of their size which normally precluded the use of a plurality of such switches being used together to accomplish multiple functions simultaneously and because the inputs and outputs thereof were not aligned, such that a large area was needed to provide suitable connections thereto. With the advent of integrated and miniaturized circuits, a need now exists for a compact and compatible rotary switch capable of satisfying the requirements incidental thereto.

SUMMARY OF THE INVENTION

Accordingly, it is an object of the present invention to provide a novel and improved rotary switch of compact construction for use in high-density switch applications.

Another object of the present invention is to provide a rotary switch which is compact, easily assembled at low cost, and yet which is not readily subject to being damaged.

Still another object of the present invention is to provide a rotary switch being encapsulated to prevent access of dust or dirt and thereby being substantially safe from being short-circuited therewithin.

Yet another object of this invention is the provision of a rotary switch of compact construction designed to facilitate stacking with like switches to permit an increased number of functions to be performed through operation of a single control knob in a minimum amount of space.

A further object of the invention is the provision of a compact coded rotary switch which is dust-proof, less complex and expensive to manufacture than present coded switches, less subject to damage, and being readily coupled in stacked relation with similar switches to increase the number of functions which may be performed through a single control in a minimum amount of space.

Yet a further object of this invention is the provision of a compact decimal version rotary switch being dust-proof and not readily subject to damage, and being stackable with similar switches to permit an increased number of functions to be performed through operation of a single control shaft, while having minimum space requirements.

The foregoing and other objects are attained according to one aspect of the present invention by a rotary switch, the parts of which generally are composed of

plastic materials, comprising a coded printed circuit board rotatably disposed in a given plane in a dust-proof housing, a plurality of elongate brush members associated therewith being fixedly secured in the housing so that the brush end thereof is always pressed against the printed circuit board with the other end extending from the housing and lying in the same plane as the board, and an operating shaft projecting from the housing being perpendicularly oriented relative to the printed circuit board and connected thereto for rotating the same from outside the housing. Within the housing, the operating shaft is connected to the printed circuit board through a disc-like member positioned on the shaft in parallel relation with the board for being rotated therewith in conjunction with the board and having compressible tabs formed on the periphery thereof which engage a plurality of detents formed in a circular pattern on an inside wall portion of the housing, whereby the shaft may be turned to place the rotatable printed circuit board in a plurality of distinct positions wherein different coding functions are established between the printed circuit on the board and the brushes. The housing exterior is further designed so that a plurality of the housings may be readily secured together in an end-to-end, or stacked, relation such that a corresponding plurality of printed circuit boards may be simultaneously rotated by a single operating shaft projecting through all of the housings to increase the number of functions that may be accomplished by maneuvering a single control knob.

In another aspect, the rotary switch of the present invention is embodied in a decimal version, wherein a fixed printed circuit board is provided within the housing and a brush member connected to the operating shaft is rotatably disposed thereon.

BRIEF DESCRIPTION OF THE DRAWINGS

Various other objects, features and attendant advantages of the present invention will be more fully appreciated as the same becomes better understood from the following detailed description when considered in connection with the accompanying drawings, in which like reference characters designate like or corresponding parts throughout the several views, and wherein:

FIG. **1** is an exploded perspective view of a switch constructed according to the present invention illustrating the arrangement of the various elements thereof in which they will be assembled, including the housing, a coded printed circuit board, a plurality of brushes associated therewith within the housing and a control shaft designed for rotating the coded printed circuit board;

FIG. **2** is a perspective view of the interior of one end cover of the housing shown in FIG. **1**, illustrating the detents formed therein, and an internal gear adapted to be disposed therewithin for rotary movement between these detents;

FIG. **3** is a perspective view of the interior of another embodiment of a housing end cover, similar to that shown in FIG. **2**, but being provided with stop members for preventing full revolution of the control shaft;

FIG. **4** is a side elevational view in cross section of the switch illustrated in FIG. **1** being shown in its assembled condition, with a control knob affixed to the projecting end of the control shaft;

FIG. 5 is a sectional view of the switch shown in FIG. 4, taken along the line A—A thereof, wherein the detented housing end cover of FIG. 2 is employed;

FIG. 6 is a sectional view of the assembled switch shown in FIG. 4 taken along the line A—A thereof, wherein the detented housing end cover having stop members integrally formed therein is employed;

FIG. 7 is a perspective view of a stacked array of a plurality of the switch assemblies illustrated in FIGS. 1 and 4;

FIG. 8 is a side view of a portion of the switch shown in FIGS. 1 and 4, illustrating one manner of providing an electrical connection to a terminal of a brush member thereof;

FIG. 9 is a perspective view illustrating another manner of providing electrical connection to the terminals of the brush members of the switch shown in FIG. 1, wherein the pin sections thereof are bent back to receive posts;

FIG. 10 is an exploded perspective view of another embodiment of a switch constructed according to the present invention, wherein a decimal version printed circuit board is provided; and

FIG. 11 is a side elevational cross-sectional view of a portion of the switch illustrated in FIG. 10, showing the connection of a circular spring-like brush member to the printed circuit board thereof.

DESCRIPTION OF THE ILLUSTRATED EMBODIMENTS

Referring now to the drawings, and more particularly to FIG. 1 thereof, a housing for the switch of the present invention is shown being composed of three separate pieces, preferably constructed of a plastic material either by molding or stamping, and including an end cover member **10**, a central brush housing member **11** and an opposing end cover member **12**, each having a flat planar portion configuration so that when the pieces are assembled they define a flat planar portion on the switch as illustrated in the drawings.

The end cover member **10** is provided with a circular upstanding rib **13** which is adapted to be received in a mating hollow recess **14**, shown in FIG. **4**, of the central housing member **11**, and with a plurality of indentations **15** along the interior of the bottom edge thereof for receiving corresponding projecting tabs **16** of the central housing member **11**, also shown in FIG. **4**, during assembly of the central housing member **11** onto the end cover member **10**. A central recess **17** is also provided in the end cover member **10** for receiving a disc member **18** preferably constructed of a plastic material, the purpose of which will be described later. As shown in FIG. **1**, the disc member **18** is formed with a central opening **19** having a square cross-sectional configuration.

A flat circular printed circuit board member **20** having a coded circuit etched on one face thereof is positioned in the recess in the end cover member **10** defined by the upstanding rim **13** thereof. The printed circuit board **20** also is provided with a central through-opening of a square-shaped configuration.

In assembling the switch, the central housing member **11** next is positioned on the end cover member **10** with the tabs **16** thereof being inserted into the indentations **15** as previously described. The rim **13** registers within recess **14**. As shown in FIG. **4**, the end cover **10** includes an annular rim **21** radially spaced of the rim **13** against which the circuit board **20** abuts. The housing member **11** includes an annular rim **21'** which is similar to and in opposing relationship to the rim **21** when the cover **10** and housing member are assembled. The rims **21** and **21'** cooperate to abut and retain the circuit board **20** therebetween, and to prevent warpage of the circuit board. The rims **21** and **21'** are also relatively thin so as to provide bearing surfaces of relatively small areas upon which the circuit board is supported for relatively low friction slidable rotation. The yet open end of the central housing member **11** also is provided with an upstanding rib member **22** which is adapted to be received in a mating recess in the opposing end cover **12** when assembled. In addition, a central diametrical opening **23** is provided in the central housing member **11** for permitting access of brush contact members **24** to the printed circuit board **20**. As illustrated in FIG. **1**, the brush members **24** are formed as curved portions on the ends of carrier strip tabs **25** of a special configuration, being elongate in nature and having a right-bend **26** formed therein intermediate the length thereof and a wire-receiving piece **27** at the other end. To accommodate the carrier strip tabs **25**, the central brush housing member **11** has a plurality of parallel grooves **28** formed therein, each having a block **29** which is adapted to fit within the bend **26** of a carrier strip tab being received in the groove. Thus, when the carrier strip tabs **25** are placed into the grooves **28**, the bends **26** are placed over the blocks **29** so that the curved brushes **24** lie in contact with the printed circuit board **20** and the wire-receiving pieces **27** protrude through the flat planar portion of the switch.

Next, a control shaft **30** having an axial square-shaped opening in one end thereof for receiving a rod **31** of square cross-section is projected through a central opening in the end cover member **12**. On the interior surface of the end cover member **12**, a recess **32** is formed, as shown in FIG. **2**, the periphery of which is somewhat tooth-shaped to provide a plurality of detents **33** for engagement by a gear member **34**. The gear member **34** is a substantially ring-shaped piece having a diametrical arm **35** in which a square-configured central opening **36** is provided, and a pair of diametrically opposed projecting tabs **37** on the outer periphery thereof which are receivable in the detents **33** and are compressible to such an extent to permit being snapped from one set of detents to an adjacent set of detents upon rotation of the gear member **34**. Thus, the detent control **33** and the housing member **12** are of one piece construction for compactness and for elimination of a plurality of separate parts to simplify assembly.

The end cover members **12** having the gear member **34** disposed in the recess **32** thereof fits onto the central brush housing member **11**, with the projecting circular rib **22** of the central member **11** being received in an annular groove **38** formed about the detented-recess **32** of outer end cover member **12**. When positioned together in this manner, the square-configured rod **31** projects loosely through the opening **23** in the central brush housing member **11**, and tightly fits within the corresponding square-configured openings in the printed circuit board **20** and the disc member **18**, so that any rotation imparted to the control shaft **30** is operable to cause rotation of the printed circuit board **20** therewith. The shaft **30** thus provides an axis of rotation about which the printed circuit board **20** is rotat-

ably displaceable. Simultaneously, of course, the gear **34** is rotated when a sufficient turning force is provided for snapping the projecting tabs **37** between adjacent sets of detents **33**.

A plurality of projecting tabs **39** formed on the interior surface of the opposing end cover member **12** along the bottom edge thereof are adapted to fit within the lower part of grooves **28** in the central brush housing member **11**, below the blocks **29** therein, when the cover members are assembled. An upper set of apertures **40, 40'** and **40''** are respectively provided in the housing members **10, 11** and **12**, as are lower sets of apertures **41, 41', 41''** and **42, 42'** and **42''**, for the purpose of securing the housing members together by suitable means, such as bolt and nut connection. In this manner, when so assembled, it may be seen that a dust-proof housing for enclosing the switch contact elements is provided.

Turning to FIG. **4**, wherein the assembled switch is illustrated being mounted on one side of a panel **43** with the control shaft **30** thereof projecting through the panel, a nut **44** is shown being threaded onto an externally threaded central projection **45** of the housing end cover **12** for clamping the switch housing to the panel **43**. An O-ring sealing means **46** is shown surrounding the threaded portion **45** on one side of the panel **43** and a suitable sealing washer **47** is provided on the other side between the panel **43** and the securing nut **44**. Disposed on the end of the control shaft **30** is a control knob **48** having a suitably shaped recess for receiving the end of shaft **30** which, as shown in FIG. **1**, has an arcuate portion thereof cut away, so that rotation of the control knob **48** with a sufficient force will rotate the control shaft **30** and cause gear member **34** to move between distinct rotational positions defined by the detents **33** and the projecting tabs **37**, the relationship of which is most clearly shown in FIG. **5**.

In certain cases, it may be desirable to provide a switch of the character described which is, for example, limited to a number of preselected positions, and in such cases another embodiment of the housing end cover **12**, as shown in FIGS. **3** and **6** may be provided. The only distinction between this embodiment and that previously described is that stop members **50** are integrally formed on the interior surface of the housing end cover member **12** on the base of the recess **32** therein. Thus, when the control shaft **31** is rotated through operation of the control knob **48**, the gear member **34** is caused to turn and is limited in its degree of rotation by the diametrical arm **35** coming into contact with one or the other of stop members **50**. As shown, rotation through approximately 180° is possible, since one-half of the diametrical arm **35** is formed being of reduced thickness, or cut away on the surface thereof facing the interior of the end cover **12** such that it is capable of passing freely over the stop members **50**, while only the other portion of the arm **35** serves to preclude further rotation. It should be understood, therefore, where it is desirable to permit nearly complete revolution but to prevent passage through a predetermined zero-position, only a single stop **50** need be provided in the end cover **12**.

The compact construction provided with the present invention readily permits stacking of a plurality of the housings formed by the housing members **10, 11** and **12** in end-to-end relation, such as illustrated in FIG. **7**, in which case if a different code were provided on each of the printed circuit boards contained therein, an increased number of functions could easily be performed through operation of a single control shaft **31**, being elongated for the purpose of extending through all of the stacked housings. Only one end cover **10** and only one front cover **12** are needed for the entire stack since a plurality of housing members **11** are stacked directly in interlocked relationship, such interlocking is accomplished since the rim **22** of one housing member **11** registers in the recess **14** of an adjacent stacked housing member **11** without a need for any end cover **10** or front cover **12** therebetween. Thus the rim **22** and the rim **13** are of similar configuration for registration in a recess **14** of any housing member **11**. Also, the housing member **11** is provided with a relatively thin annular rim **21''** similar to the rim **21** on the end cover **10**, so that when an end cover **10** is eliminated between two stacked housing members **11**, the rim **21''** of one housing member **11** will cooperate with the rim **21'** of the other stacked housing member to slidably support a circuit board **20** in the same manner as the board **20** is supported by the rims **21** and **21'** as shown in FIG. **4**. Thus, between stacked housing members **11**, the cover **10** can be eliminated, with an adjacent housing member **11** performing the functions of the cover plate **10**. This results in a compact assembly with the control shaft **31** being supported only at its ends, by one end cover **10** at one end, and by one housing member **12** at the other end. With only one housing member **12** required, only one detent control **33** is needed for an entire assembly of stacked circuit boards **20**.

Turning now to FIGS. **8** and **9**, there are shown different methods of electrically connecting the brushes **24** exteriorally of the housing which may be employed with the compact and unique construction of the present invention. In FIG. **8**, for example, an electrical wire may be bent in a conventional manner and inserted into the wire-receiving piece **27** of the carrier strip tabs **25**, which then is compressed thereabout. In FIG. **9**, however, the wire-receiving pieces **27** are shown being bent back for receiving terminal posts, such that a plug-in adaptation would be possible. It is noted, in this respect, that the inputs and outputs, or all of the carrier strip tabs **25**, are positioned in one plane to facilitate plugging the same into a printed circuit board.

Another embodiment of the present invention is illustrated in FIGS. **10** and **11**, wherein a decimal version is provided. In this embodiment, a housing member **51** provides a recess **52** for receiving a printed circuit board **53**, with a tab **54** projecting from the recess **52** being engaged with an aperture **55** in the printed circuit board. A thin disc-like piece **56** having a central square-configured opening and a plurality of pins projecting from one face thereof is fixed to one face of the printed circuit board **53** with the pins thereof extending through a central opening **57** in the board being received in corresponding pin openings in a thin washer element **58** on the printed circuit side of the board **53**. A ring brush member **60** is engaged between the washer member **58** and a plug **61** having a central post extending through an opening of the brush ring **60** and a base member having pin openings therein for receiving the pins of the disc member **56** and extending through the washer member **58**. The base and post portions of the plug member **61** are provided with a continuous through opening of square configuration for receiving a control shaft **31** of the type described herein-

before. The brush ring **60** accordingly is rotatably fixed on the printed circuit board **53**.

Referring more particularly to FIG. **11**, the brush ring **60** is shown having arcuate arms **62** and **63** extending in opposite circumferential directions which are bent in the direction of the printed circuit board so that the ends thereof engage the board. The one arm **62** is at a lesser radial distance from the brush ring center than the other arm **63**, such that it is always in engagement with an annular conductive area **64** on the board **53** positioned about the central opening **57** therein. The other arm **63** is adapted upon rotation of the brush ring **60** to engage a different one of a plurality of conductive areas **65** on the printed circuit board, whereby different circuits may be connected according to the rotating of the control shaft to preselected different rotary positions.

With this embodiment, an end cover, not shown, must be provided on the side of the housing member **51** opposite the printed circuit board **53**, and another end cover **66** having the same detent and internal gear arrangement as described above must be provided for the printed circuit board side of the housing member **51**. These end covers must of course be different than the end covers **10** and **12** above, especially along the bottom edges thereof, so that they conform to the housing member **51** to provide a dust-proof enclosure. Obviously, the outputs of the printed circuit board **53** may be made for plugging the same into a printed circuit board or they could be provided with spaced tabs for breaking conventional wire connections.

With the embodiments described hereinabove, it should be clear that the objects of this invention have been achieved. Further, in order to vary the code of any of the switches described herein, it is only necessary to change the printed circuit board, which may be accomplished at the time of manufacture. The number of detent positions is determined by the code, or the design of the conductive area of the printed circuit board. Because of the plastic material used in manufacturing the parts, the switch is less susceptible to damage, and its novel arrangement of elements makes the switch more adaptable to various applications, while at the same time being very compact.

Obviously, many modifications and variations are possible in light of the above teachings. It is to be understood, therefore, that within the scope of the appended claims the invention may be practiced otherwise than is specifically described herein.

What is claimed as new and desired to be secured by Letters Patent of the United States is:

1. In a switch having a housing, a printed circuit board mounted for displacement in said housing, at least one electrical contact protruding externally of said housing and having a brush portion protruding into said housing and engaging said printed circuit board for electrical engagement on a selected electrical circuit provided on said printed circuit board upon displacement of said printed circuit board, and means mounted in said housing for displacing said printed circuit board, the improvement comprising: a pair of bearing surfaces fixedly located on said housing and abutting and supporting opposite sides of said printed circuit board and retaining said circuit board therebetween and preventing warping of said printed circuit board.

2. The structure as recited in claim **1**, wherein said printed circuit board is displaceable about an axis of rotation, said bearing surfaces are circular rims, said rims encircle and axis of rotation of said printed circuit board, and said rims abut and support said printed circuit board circularly about its axis of rotation to prevent warping of said printed circuit board.

3. The structure as recited in claim **2**, wherein, said rims are relatively thin to provide bearing surfaces of relatively small areas upon which the printed circuit board is slidably supported for relatively low sliding friction.

4. The structure as recited in claim **1**, and further including: at least one additional electrical contact protruding externally of said housing and having a brush portion protruding internally into said housing and engaging said printed circuit board for selective electrical engagement with a selected electrical circuit provided on said printed circuit board.

5. The structure as recited in claim **4**, wherein, said housing has a flat planar portion, and all of said electrical contacts protrude from said housing only through said flat planar portion for making electrical connections externally of said housing.

6. The structure as recited in claim **4**, wherein, said housing includes an internal detent portion, and further including: a gear mounted in said housing for selective engagement in said detent portion, thereby positively locating said printed circuit board in selected positions determined by selective engagement of said gear in said detent portion.

7. The structure as recited in claim **1**, wherein, said housing includes detent means, and further including: a gear mounted in said housing for displacement and having a portion displaceable into selected engagement in said detent means, thereby positively locating said printed circuit board in a selected positions defined by the selected engagement of said gear in said detent means.

8. The structure as recited in claim **4**, wherein, said electrical contacts include electrical wire-receiving portions protruding externally of said housing for making electrical connections externally of said housing.

9. The structure as recited in claim **4**, wherein, said housing includes a first member having grooves each receiving one of said electrical contacts therein, said grooves each having a shape conforming to the shape of a corresponding electrical contact for registration of the corresponding electrical contact fixedly in position within the groove, and a cover overlying said first member with said electrical contacts interposed between said first member and said cover, whereby said electrical contacts are fixedly retained with respect to said housing.

10. A switch, comprising: a first brush housing member of electrical insulation material having a plurality of electrical contacts mounted thereon, said contacts further having electrical terminal portions protruding externally of said brush housing member for making desired electrical connections externally of said brush housing member, a first printed circuit board having electrical circuits thereon, said contacts having brush portions protruding internally of said brush housing member and engaging said printed circuit board, a first cover portion engaging and covering one end of said brush housing member, said first printed circuit board being enclosed by and interposed between said first cover portion and said brush housing member, said first cover portion including a support means engaging said

printed circuit board, said brush housing member having a first bearing surface engaging said printed circuit board and cooperating with said support means to support said printed circuit board therebetween and thereby prevent warpage of said printed circuit board, covering means covering another end of said brush housing member, and displacing means mounted on said switch for displacing said first printed circuit board relative to said brush portions for engagement of said brush portions with selected electrical circuits on said first printed circuit board, said first printed circuit board being slidably displaceable relative to said support means and said first bearing surface.

11. The structure as recited in claim **10,** wherein, said covering means includes a second brush housing member abutting said first brush housing member, a second printed circuit board interposed between said first and said second brush housing members, said second printed circuit board being provided with electrically conducting circuit paths thereon, electrical contact means in said second brush housing member, said second printed circuit board being displaceable relative to said electrical contact means to enable selected electrical engagement of said electrical contact means with selected electrically conducting circuit paths on said second printed circuit board, said first brush housing member having a second bearing surface engaging said second printed circuit board, said second brush housing member having bearing surface means engaging said second printed circuit board and cooperating with said second bearing surface of said first brush housing member to support therebetween said second printed circuit board and to prevent warpage of said second printed circuit board, said second printed circuit board being slidably displaceable by said displacing means relative to said second bearing surface and said bearing surface means.

12. The structure as recited in claim **10,** wherein, said first printed circuit board is rotatably displaceable about an axis of rotation, said first bearing surface is in the form of a circular rim encircling said axis of rotation, and said rim is of relatively thin configuration to minimize the bearing surface area thereof engaging said first printed circuit board and to minimize sliding friction resulting from displacement of said first printed circuit board relative to said rim.

13. The structure as recited in claim **10,** wherein, said first printed circuit board is rotatably displaceable about an axis of rotation, said support means is in the form of a circular rim encircling said axis of rotation, and said rim is of relatively thin configuration to minimize the bearing surface area thereof engaging said first printed circuit board and to minimize the sliding friction resulting from displacement of said first printed circuit board relative to said rim.

14. The structure as recited in claim **10,** wherein, said first printed circuit board is rotatably displaceable about an axis of rotation, and said support means and said first bearing surface are in the respective forms of circular rims encircling the axis of rotation of said first printed circuit board, said circular rims being of relatively thin configurations to minimize the bearing surface areas engaging said first printed circuit board and to minimize sliding friction resulting from displacement of said first printed circuit board relative to said rims.

15. The structure as recited in claim **10,** wherein, said brush housing member is provided with grooves each receiving one of said electrical contacts therein, each of said grooves having a shape corresponding to the shape of a corresponding electrical contact for registration of the corresponding electrical contact fixedly in position within the groove, said electrical contacts being interposed between said brush housing member and said covering means, whereby said electrical contacts are fixedly retained with respect to said brush housing member.

16. The structure as recited in claim **11,** wherein, said first printed circuit board is rotatably displaceable about an axis of rotation, and said support means and said first bearing surface are in the respective forms of circular rims encircling the axis of rotation of said first printed circuit board, and said circular rims are of relatively thin configurations to minimize the bearing surface areas engaging said first printed circuit board and to minimize the sliding friction resulting from displacement of said first printed circuit board relative to said rims.

17. The structure as recited in claim **11,** wherein, said first printed circuit board is rotatably displaceable about an axis of rotation, said support means is in the form of a circular rim encircling said axis of rotation, and said rim is of relatively thin configuration to minimize the bearing surface area thereof engaging said first printed circuit board and to minimize the sliding friction resulting from displacement of said first printed circuit board relative to said rim.

18. The structure as recited in claim **11,** wherein, said first printed circuit board is rotatably displaceable about an axis of rotation, said first bearing surface is in the form of a circular rim encircling said axis of rotation, and said rim is of relatively thin configuration to minimize the bearing surface area thereof engaging said first printed circuit board and to minimize the sliding friction resulting from displacement of said first printed circuit board relative to said rim.

19. The structure as recited in claim **11,** wherein, said switch is provided with detent means, and said displacing means is provided with a gear displaceable into selected engagement within said detent means for locating said first and said second printed circuit boards in selected positions defined by the selected engagement of said gear within said detent means.

20. The structure as recited in claim **19,** wherein, said switch includes a projecting stop member, and said gear member is engageable against said stop member to limit displacement of said gear member.

21. The structure as recited in claim **11,** wherein, said first brush housing member includes a plurality of grooves each receiving one of said electrical contacts therein, said grooves each having a shape conforming to the shape of a corresponding electrical contact for registration of the corresponding electrical contact fixedly in position within the groove, and said covering means overlying said first brush housing member with said electrical contacts generally interposed between said first brush housing member and said covering means whereby said electrical contacts are fixedly retained with respect to said first brush housing member.

22. The structure as recited in claim **11,** wherein, said brush housing member, said first cover portion and said covering means define on said switch a planar portion, and said electrical contacts and said electrical contact means protrude from said planar portion for making electrical connections externally of said switch.

23. The structure as recited in claim 11, wherein, said second brush housing member includes a plurality of grooves receiving said electrical contact means therein, said grooves having shapes conforming to the shapes of said electrical contact means for registration of the electrical contact means fixedly in positions within the grooves, and means overlying said second brush housing member with said electrical contact means generally interposed between said second brush housing member and said lastmentioned means, whereby said electrical contact means are fixedly retained with respect to said second brush housing member.

24. The structure as recited in claim 4, wherein, said electrical contacts include pluggable portions for pluggable connection externally of said rotary switch.

25. A rotary switch comprising: a housing; a printed circuit board; at least one electrically conducting brush means; means for supporting said printed circuit board and said at least one brush means in contacting relation within said housing; means for rotating said printed circuit board to one of a predetermined number of distinct positions; a circular array of detents formed in a plane on an interior surface of said housing; a gear disposed within said circular array of detents in the same plane and having at least one projecting compressible tab for engaging in said detents; means connecting said gear and said printed circuit board for providing simultaneous rotation thereof; means for rotating said gear from outside said housing; and said housing further comprising, one end cover for rotatably receiving said printed circuit board therein, a brush housing member connectable with said one end cover in substantially dust-free relation and having means therein for supporting the brush means with portions thereof extending therefrom in a common plane, another end cover connectable to said brush housing member in substantially dust-free relation, means on said another end cover for connecting said housing on a panel with said means for rotating said printed circuit board projecting through said panel to a side thereof opposite said housing, and sealing means on said another end cover sealing said means for rotating said printed circuit board to provide a substantially dust-free environment in said switch housing.

26. The structure as recited in claim 11, wherein said second printed circuit board is rotatably displaceable about an axis of rotation, said second bearing surface is in the form of a circular rim encircling said axis of rotation, and said rim is of relatively thin configuration to minimize the bearing surface area thereof engaging said second printed circuit board and to minimize the sliding friction resulting from displacement of said second printed circuit board relative to said rim.

27. The structure as recited in claim 11, wherein said second printed circuit board is rotatably displaceable about an axis of rotation, said bearing surface means is in the form of a circular rim encircling said axis of rotation, and said rim is of relatively thin configuration to minimize the bearing surface area thereof engaging said second printed circuit board and to minimize the sliding friction resulting from displacement of said second printed circuit board relative to said rim.

28. The structure as recited in claim 11, wherein said second printed circuit board is rotatably displaceable about an axis of rotation, said bearing surface means and said second bearing surface are in the respective forms of circular rims encircling said axis of rotation, and said rims are of relatively thin configurations to minimize the bearing surface areas thereof engaging said second printed circuit board and to minimize the sliding friction resulting from displacement of said second printed circuit board relative to said rims.

29. The structure as recited in claim 10, wherein said brush housing member, said first cover portion and said covering means define a flat planar portion of said switch, said electrical contacts protrude from said flat planar portion for making electrical connections externally of said switch.

30. The structure as recited in claim 25, wherein said switch further includes at least another brush housing member interposed between said another end cover and said means for supporting said printed circuit board, a printed circuit means in said another brush housing member, electrical contact means in said another brush housing member having brush means contacting said printed circuit means, and said printed circuit means being rotatable together with said printed circuit board by said means for rotating said printed circuit board to one of a predetermined number of positions.

31. The structure as recited in claim 30, wherein said first-mentioned brush housing member includes a first bearing surface abutting and slidably supporting said printed circuit board, said first-mentioned brush housing member includes a second bearing surface slidably abutting and supporting said printed circuit means, and said another brush housing member includes a third bearing surface slidably supporting said printed circuit means.

32. The structure as recited in claim 30, and further including additional electrically conducting brush means mounted in said another brush housing member and in contact with said printed circuit means.

* * * * *