April 10, 1934. L. M. WOOLSON 1,954,163

INTERNAL COMBUSTION ENGINE

Filed June 28, 1929 2 Sheets-Sheet 1

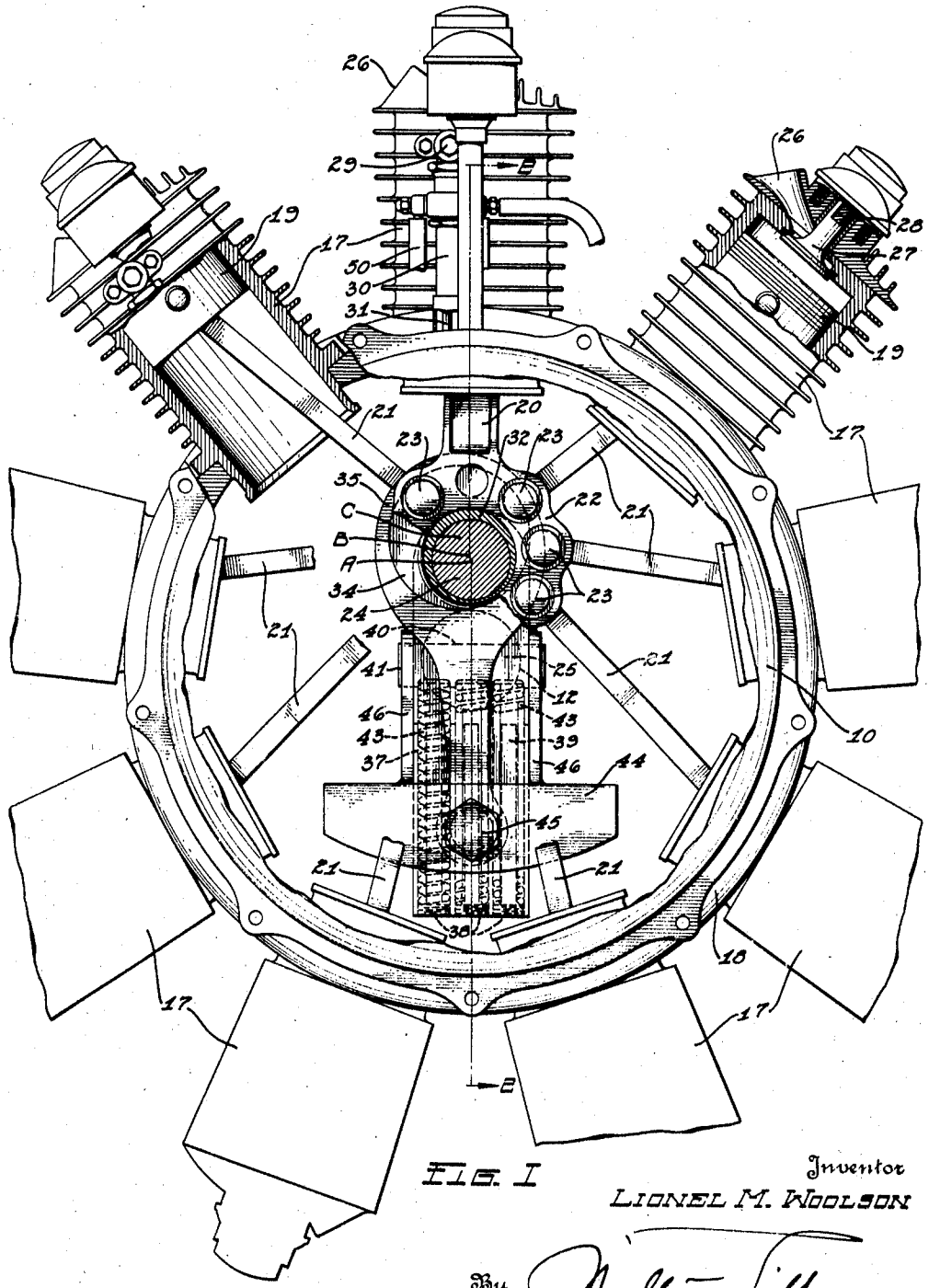

FIG. I

Inventor
LIONEL M. WOOLSON

By Milton Tibbetts

Attorney

April 10, 1934. L. M. WOOLSON 1,954,163

INTERNAL COMBUSTION ENGINE

Filed June 28, 1929 2 Sheets-Sheet 2

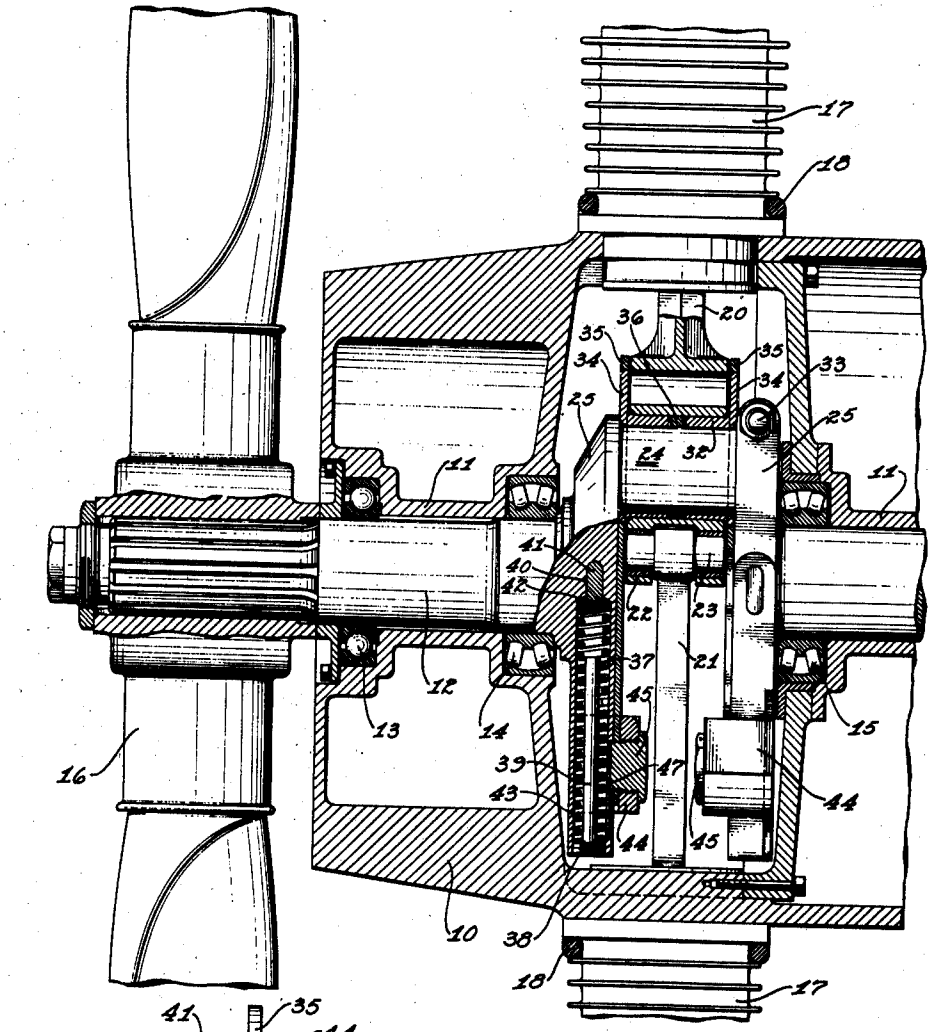

FIG. 2

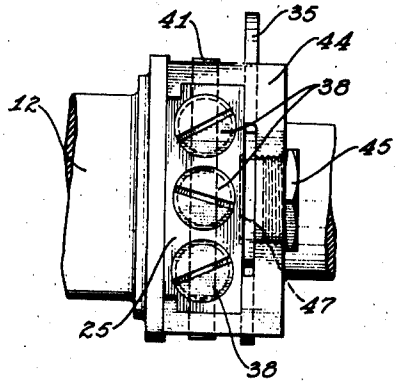

FIG. 3

Inventor
LIONEL M. WOOLSON

By Milton Tibbetts

Attorney

Patented Apr. 10, 1934 1,954,163

UNITED STATES PATENT OFFICE

1,954,163

INTERNAL COMBUSTION ENGINE

Lionel M. Woolson, Detroit, Mich., assignor to Packard Motor Car Company, Detroit, Mich., a corporation of Michigan

Application June 28, 1929, Serial No. 374,368

24 Claims. (Cl. 123—48)

This invention relates to internal combustion engines, and more particularly to engines of the compression ignition type.

Difficulty is encountered in starting engines of the type in which combustion of the fuel charge occurs through heat of compression because the cylinders are cold. Further, with such engines employed as the power plant in an airship the same difficulty is encountered when gliding or when the fuel quantity is set at the minimum if one or more of the cylinders stop firing, as the air entering the cylinders under these conditions tends to chill the working chamber, and this occurs even when glow plugs or a similar electrical heating means is employed. An object of my invention, therefore, is to automatically promote the development of heat by compression under such conditions in order to raise the temperature in engine cylinders when starting or idling.

A further object is to provide an internal combustion engine of the compression ignition type in which temperature in the cylinders is automatically regulated by and inversely to the engine speed.

Another object of my invention is to provide compression ratio changing mechanism for an internal combustion engine of the compression ignition type which is actuated from the crankshaft to vary the compression ratio inversely relative to the speed developed.

Other objects of the invention will appear from the following description taken in connection with the drawings forming a part of this specification, in which:

Figure 1 is an end elevation of an engine, partially broken away and partially in section, with which my invention is incorporated.

Figure 2 is a vertical sectional view of the same taken on line 2—2 of Figure 1.

Figure 3 is a fragmentary view of the crank shaft looking at the end of the crank cheek.

Referring to the drawings by characters of reference, 10 represents a barrel-like crank case having an axial hub 11 through which the single throw crank shaft 12 extends. Bearings 13, 14, and 15 are arranged intermediate the crank case and crank shaft, and a propeller 16 is secured to the front end of the crank shaft which projects beyond the crank case. Cylinders 17 extend radially from the crank case, and are secured rigidly therewith by compression hoops 18 which encircle flange portions of the cylinders to clamp them under compression against the crank case.

A piston 19 is reciprocably mounted within each of the cylinders, a master rod 20 being connected with the uppermost piston. Connecting rods 21 are secured to the other pistons and are pivoted to the master rod hub 22, in circular arrangement, by pins 23. The master rod hub encircles the crank shaft pin 24 which extends between the cheeks 25.

The internal combustion engine illustrated is of the four-cycle type in which air and liquid fuel are introduced separately into the cylinders, and mixed therein to form a fuel charge which is ignited by the heat of compression. For this purpose any conventional manner of air and fuel introduction can be utilized, however, I have shown the cylinder provided with a Venturi passage 26 in the cylinder head which is arranged to direct the air against the working chamber wall so that it will be caused to rotate in the cylinder. A valve 27 controls the air passage, and in this instance I utilize the passage as the exhaust outlet as well as the inlet, and suitable actuating mechanism is arranged between the valve rocker arm 28 and the crank shaft. A high pressure fuel injection device is attached to each cylinder and consists of a nozzle portion 29 and a pump portion 30, suitable mechanism for operating the pump rod 31 being actuated intermittently from the crank shaft. Fuel is conducted to the pumps from a reservoir in any suitable manner, such as by conduit means 50.

In order that starting of the engine and bringing in of cylinders which have ceased firing while the engine is idling may be assisted, I provide means for automatically increasing the temperature in the cylinders. There are various ways of accomplishing this result, the specific embodiment shown consisting of a speed actuated compression ratio changing mechanism associated with the master rod and the crank shaft. The device is arranged so that the compression ratio is varied automatically inversely to the speed of the engine, so that when idling the compression ratio is the highest, and when running under full fuel injection or load the compression ratio is the lowest.

To this end I provide a three part eccentric sleeve 32 intermediate the crank shaft pin 24 and the hub of the master rod, the position of which is changed relative to and by the speed of the crank shaft, such sleeve serving as a bearing between the crank shaft pin and the master rod. The master rod illustrated is of the integral type, and the crank shaft is made in two parts, so that the sleeve and master rod can be assembled endwise upon the crank pin, one of the cheeks being clamped upon one end of the crank pin by the

bolt 33. The eccentric sleeve 32 is provided at each end with eccentric flanges 34 which are positioned adjacent the crank shaft cheeks, such eccentric flanges providing bearings for the yoke members 35 which extend adjacent the crank cheeks in the same planes with the flanges. For the purpose of assembly, the eccentric sleeve 32 is formed in three axially arranged sections, the central section 36 providing a spacer for the flanged pieces. The center of the crank pin is indicated at A, the center of the eccentric sleeve and the master rod hub mounted thereon is indicated at B, and the center of the eccentric flanges is indicated at C. It will be seen, therefore, that the center of both the sleeve flanges and master rod hub are in an off-center relation with the crank pin, and that turning of the eccentric in its relation to the crank pin will shift the master rod relative to the crank pin and thereby change the piston stroke and the compression ratio.

The crank shaft cheeks are each provided with a plurality of bores 37 which are closed by screw plugs 38 from the inner face of which stop members 39 extend. The cheeks are also provided with slots 40, extending in a direction transversely to the bores therein, to accommodate pins 41. A bearing member 42 is arranged within each of the cheek bores and such members provide seats for one end of the coil springs 43 which are arranged within the bores so that they encircle the stop members and engage the plugs 38 at their other ends. It will be seen that the spring tension can be regulated through adjustment of the screw plugs, so that a desired pressure will normally be exerted against the bearing members and the pins, and it will be further seen that the stop members 39 limit the movement of the pins 41 in a direction compressing the springs. Movable counter weights for the crank shaft are utilized for actuating the compression ratio changing mechanism. The weight members 44 are secured to the yoke members 35 by nuts 45, and a pair of stops 46 extend from the weight members and are secured to the ends of the pins 41. The crank cheeks are provided with slots 47 which provide guide-ways for the ends of the nuts projecting through the yokes.

When the rotational speed of the crank shaft is at the minimum, as when the engine is idling, the mechanism is in the relation shown in Figure 2. As the speed increases, the weight members are moved by centrifugal force in a direction toward the ends of the crank cheeks remote from the crank pin, so that when the crank shaft speed increases and a sufficient centrifugal force is developed to overcome the tension of the springs 43, the weights and attached pins will move outwardly. Such movement of the counterweights will cause the yokes to be moved therewith through their attachment, carrying the eccentric in an anti-clockwise direction therewith as viewed from the rear of the engine, thereby shifting the center of the master rod in the same direction relative to the center of the crank shaft pin. Such change of the master rod relation with the crank pin will shorten the reciprocal movement of the pistons and will also increase the cylinder clearance space thereabove when in top center position, thereby reducing the compression ratio.

As the engine speed is reduced the springs will normally return the structure to a position producing higher compression ratio. The springs are preferably placed under sufficient tension so that the engine will have to be rotating at a speed sufficient to sustain an aeroplane in flight before the centrifugal force will cause compression of the springs and allow the device to function.

It will be seen that the mechanism is arranged to automatically provide the highest compression ratio when the engine is working at low speed and to decrease the compression ratio as the speed increases. As the cylinder temperature is greater at a high compression ratio, starting of the engine and bringing in of the cylinders which have ceased firing will be greatly facilitated. This invention is of especial assistance with engines in which air, for the fuel charge, is drawn directly into the cylinders and in which ignition occurs through heat of compression, because air being drawn in tends to cool the cylinders.

It will be seen that the shaft counter weights are utilized to actuate the compression ratio changing mechanism. The invention is of especial advantage in raising the temperature in the cylinders when an engine is idling during gliding of an aeroplane, because with normal compression ratio, the fuel charge is small and the incoming air, which is usually colder with elevation, tends to chill the cylinder and thus reduces the temperature to such an extent that combustion will not occur and is difficult to renew.

Various changes can be made in the details of the structure illustrated and described without departing from the spirit of my invention and the scope of what is claimed.

What I claim is:

1. In an internal combustion engine, a crank shaft, an eccentric rotatable on the crank shaft pin, a piston connecting rod engaging said eccentric, and mechanism for automatically actuating said eccentric to control the rod movement and thereby regulate the compression ratio inversely to engine speed, said mechanism including resilient means associated to oppose the rotation of the eccentric in one direction relative to the crank shaft pin.

2. In an engine, a crank shaft, and automatic compression ratio varying mechanism responsive to the speed of the crank shaft, said mechanism being carried entirely by and rotatable with said crank shaft and operating to vary the compression ratio inversely with the speed of the crank shaft.

3. In an engine, a crank shaft, an eccentric sleeve mounted on the crank shaft pin, said sleeve having eccentric flanges, means engaging said flanges responsive to engine speed for rotating the eccentric on the crank pin, and a piston connecting rod mounted on the eccentric sleeve.

4. In an engine, a crank shaft, an eccentric sleeve mounted on the crank shaft pin, said sleeve having end eccentric flanges, members aligned with the crank cheeks and mounted around the eccentric flanges, and means associated with the members and reciprocating in response to the speed of the shaft to shift the members and rotate the sleeve relative to the pin to vary the stroke of the piston rod.

5. In an engine, a crank shaft, an eccentric sleeve formed of aligned sections mounted on the crank pin, the end eccentric sections having eccentric flanges extending therefrom, a piston connecting rod carried by said eccentric sleeve, and means responsive to the crank shaft speed and associated with the eccentric sleeve flanges to control the rotational position of the sleeve with respect to said crank pin.

6. In an engine, a crank shaft, an eccentric sleeve rotatably mounted on the crank pin, eccentric flanges extending from the ends of said sleeve

adjacent the crank shaft cheeks, a piston connecting rod carried by the eccentric sleeve, weighted strap members adapted to reciprocate along the crank shaft cheeks and encircling the eccentric flanges, said strap members reciprocating in accordance with the crank shaft speed, and spring means resisting such movement of said weighted strap members.

7. In an engine, a crank shaft, movable counterweights associated with the crank shaft cheeks, and mechanism actuated by the counterweights to regulate the compression ratio.

8. In an engine, a crank shaft, an eccentric sleeve rotatably mounted upon the crank pin, a piston connecting rod mounted on the eccentric sleeve, members for rotating the eccentric sleeve on the crank pin, and counterweights associated with the crank shaft cheeks, said counterweights being movable responsive to the speed of the crank shaft rotation to move said members, resilient means resisting centrifugal movement of said counterweights, and means limiting the movement of said counterweights.

9. In an internal combustion engine, a crank shaft, centrifugally movable counter weights for the crank shaft, a connecting rod assembly mounted on the crank shaft, and means actuated by the movement of said counter weights for varying the relation of the connecting rod assembly on the crank shaft to regulate the compression ratio of the engine.

10. In an engine, a crank shaft, movable counterweights associated with the crank shaft cheeks, and mechanism actuated by the counterweights to regulate the compression ratio inversely to the engine speed.

11. The method of charging an internal combustion engine comprising introducing air charges into the cylinders in quantities varying inversely with the engine speed, compressing the air charges to an extent varying in accordance with the quantity thereof, and introducing fuel charges into the compressed air charges in the cylinders.

12. The method of charging an internal combustion engine comprising introducing air charges into the cylinders in quantities varying inversely with the engine speed, compressing the air charges to the maximum when the engine is running below a predetermined R. P. M., reducing the compression pressure as the R. P. M. increases above the predetermined amount, and introducing atomized liquid fuel into the compressed air charges.

13. In an internal combustion engine, compression ratio regulating mechanism, means normally urging said mechanism into a position causing the maximum compression of fuel charges, and means responsive to engine speed beyond a predetermined R. P. M. for actuating the mechanism to vary the compression ratio inversely with the speed.

14. In an internal combustion engine, compression ratio regulating mechanism, means responsive to centrifugal force for actuating the mechanism to vary the compression ratio inversely with the engine speed, and means opposing the effect of centrifugal force to actuate the mechanism, said opposing means being effective to prevent actuation of said mechanism below a predetermined engine speed.

15. The method of operating an internal combustion engine comprising introducing air charges by suction into the cylinders in a volume determined by the piston stroke, compressing the air charges in the cylinders, introducing fuel charges into the compressed air charges in desired volume, and varying the range of the piston stroke throughout one portion only of the engine speed range.

16. The method of operating an internal combustion engine comprising introducing air charges by suction into the cylinders in a volume determined by the piston stroke, compressing the air charges in the cylinders, introducing fuel charges into the compressed air charges in desired volume, and varying the range of the piston stroke throughout one portion only of the engine speed range and inversely to the engine speed.

17. The method of operating an internal combustion engine comprising introducing air charges into the cylinders varying in volume inversely with the speed in the higher range of engine operation, compressing the air charges in the cylinders, introducing fuel charges into the compressed air charges in desired volume, and varying the compression ratio throughout the higher speed range of the engine inversely with the speed variance.

18. The method of operating an internal combustion engine comprising introducing air charges into the cylinders varying in volume inversely with the speed in the higher range of engine operation, compressing the air charges introduced into the cylinders, introducing fuel charges into the compressed air charges in the cylinders, and adjusting the movement range of a wall of the combustion chambers to vary the compression ratio inversely with and above a predetermined speed.

19. In a radial type explosion engine, the combination with the crank shaft and master connecting rod hub, of a compression ratio changing device comprising an eccentric sleeve intermediate the crank shaft and the master rod hub, and automatic means carried entirely by the crank shaft for adjusting the position of the eccentric sleeve upon and in a direction relative to the crank shaft whereby the hub is shifted to cause a compression ratio varying inversely relative to the engine speed.

20. In an internal combustion engine, a crank shaft, an eccentric rotatable on the crank shaft pin, a piston connecting rod hub carried by said eccentric, means responsive to engine speed and connected to the eccentric for rotating the same relative to the pin to regulate the compression ratio inversely to engine speed, and spring means resisting the movement of the eccentric from a position effecting high compression ratio.

21. The method of charging an internal combustion engine, comprising introducing air charges into the cylinders, compressing the air charges in the cylinders, introducing atomized liquid fuel into the compressed air charges in the cylinders to form a combustible mixture, maintaining a constant high compression ratio below a predetermined engine speed range, and regulating the compression ratio above the predetermined speed range inversely with the variance thereof.

22. In a radial engine, a crank shaft, an eccentric sleeve rotatably mounted on the crank shaft, cylinders, pistons in the cylinders, a connecting rod assembly associated with the pistons and including a hub mounted on the sleeve, and regulating mechanism connected to the sleeve to control its position angularly on the crank shaft, said mechanism automatically turning the sleeve

on the crank shaft to shift the hub in a direction to regulate the compression ratio inversely to the engine speed.

23. The method of charging an internal combustion engine comprising drawing air charges into the cylinders through suction induced by pistons, varying the volume of the air charges drawn into the cylinders inversely with the engine speed, compressing the air charges drawn into the cylinders to an extent varying directly as the volume thereof, and introducing atomized liquid fuel into the compressed air charges in the cylinders.

24. The method of operating an internal combustion engine comprising introducing air charges into the engine cylinders, compressing the air charges in the cylinders, introducing fuel charges into the air charges during their compression in the cylinders, and varying the compression ratio inversely with the engine speed by engine developed centrifugal force.

LIONEL M. WOOLSON.