J. E. WILSON.

SAW GUIDE.

APPLICATION FILED AUG. 8, 1914.

1,147,063.

Patented July 20, 1915.

2 SHEETS—SHEET 1.

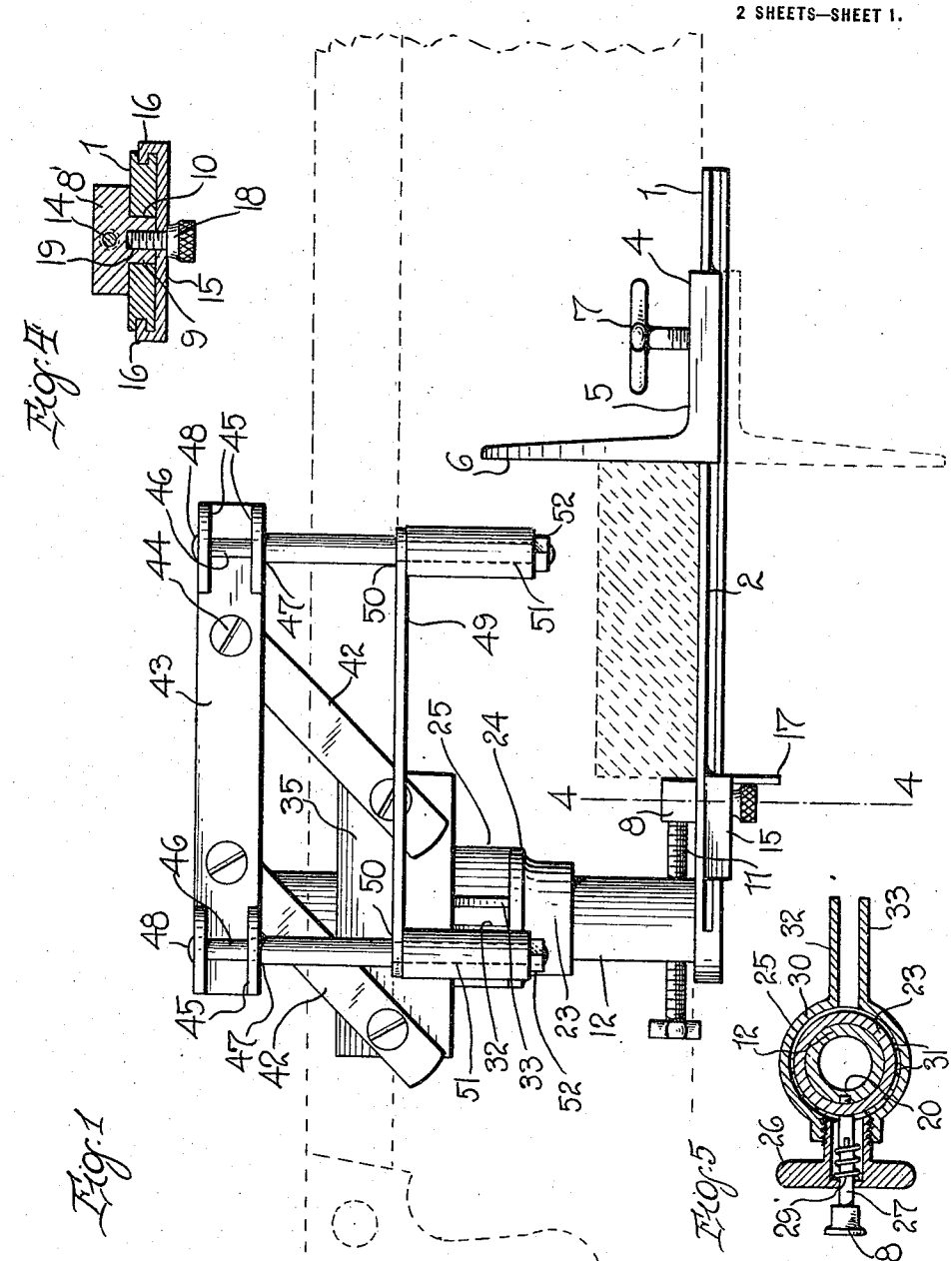

Fig. 1

Fig. 4

Fig. 5

Witnesses
Robert M. Sutphen.
A. J. Kind.

Inventor
J. E. WILSON
By Watson E. Coleman
Attorney

COLUMBIA PLANOGRAPH CO., WASHINGTON, D. C.

J. E. WILSON.

SAW GUIDE.

APPLICATION FILED AUG. 8, 1914.

1,147,063.

Patented July 20, 1915.

2 SHEETS—SHEET 2.

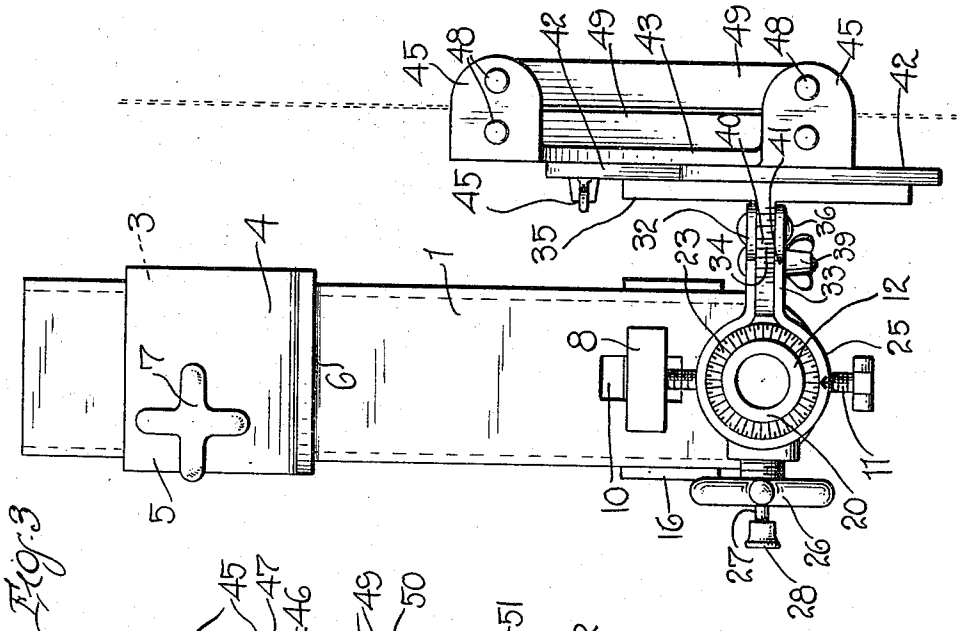

Fig. 3

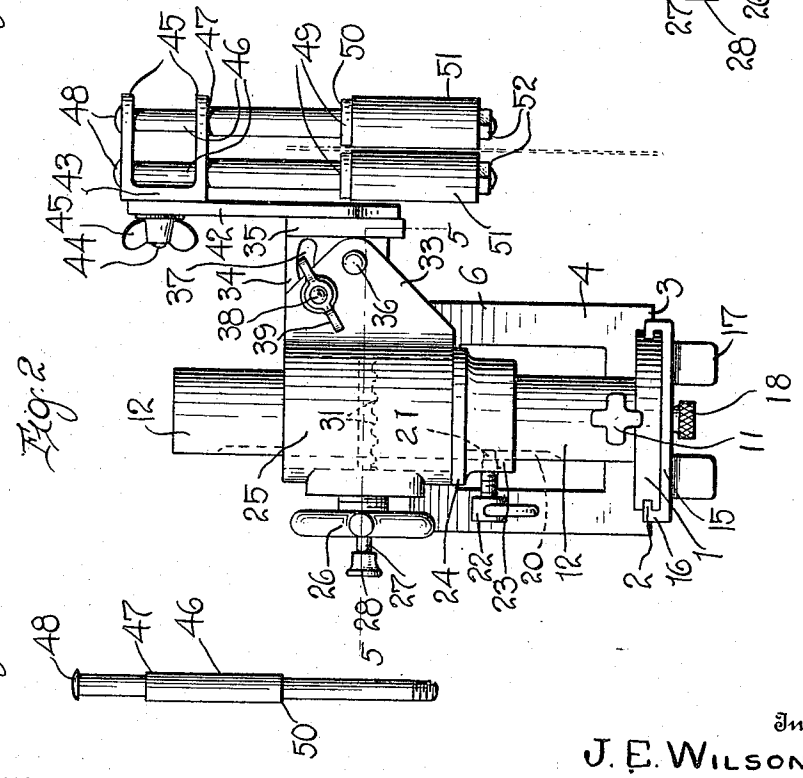

Fig. 2

Fig. 6

Witnesses

Robert M. Sutphen

A. L. Hinkle

Inventor

J. E. WILSON

By Watson E. Coleman

Attorney

COLUMBIA PLANOGRAPH CO., WASHINGTON, D. C.

UNITED STATES PATENT OFFICE.

JOHN E. WILSON, OF PEN ARGYL, PENNSYLVANIA.

SAW-GUIDE.

1,147,063. Specification of Letters Patent. Patented July 20, 1915.

Application filed August 8, 1914. Serial No. 855,864.

To all whom it may concern:

Be it known that I, JOHN E. WILSON, a citizen of the United States, residing at Pen Argyl, in the county of Northampton and State of Pennsylvania, have invented certain new and useful Improvements in Saw-Guides, of which the following is a specification, reference being had to the accompanying drawings.

This invention relates to certain improvements in saw guides and has relation more particularly to a device of this general character especially designed and adapted for use for cutting miters on any angle, either on planes at right angles to the base of the structure or on angles oblique thereto; and the object of the invention is to provide a device of this general character having novel and improved means whereby the same may be assembled with convenience and facility and whereby the guide frame may be effectively maintained in an adjusted position.

The invention consists in the details of construction and in the combination and arrangement of the several parts of my improved saw guide whereby certain important advantages are attained and the device is rendered simpler, less expensive and otherwise more convenient and advantageous for use, all as will be hereinafter more fully set forth.

The novel features of the invention will be carefully defined in the appended claims.

In order that my invention may be the better understood, I will now proceed to describe the same with reference to the accompanying drawings, wherein—

Figure 1 is an elevational view of a saw guide constructed in accordance with an embodiment of my invention, a saw and the work being indicated by dotted lines; Fig. 2 is an end elevational view of the device as herein embodied; Fig. 3 is a top plan view thereof; Fig. 4 is a sectional view taken substantially on the line 4—4 of Fig. 1; Fig. 5 is a sectional view taken substantially on the line 5—5 of Fig. 2; and Fig. 6 is a detail view, in elevation, of one of the rods herein embodied.

As disclosed in the accompanying drawings, 1 denotes the base of the structure which is preferably of metal and is provided along its longitudinal edges with the grooves or channels 2 to be engaged by the inturned flanges 3 formed on the base of the gage 4. As herein disclosed, the gage 4 comprises a base 5 and a face plate 6, the latter being disposed at right angles to the longitudinal diameter of the base in order to assure the correct cutting of material where the same is to be squared, and disposed through the base 5 is a set screw 7 coacting with the base 1, in a manner which is believed to be self-evident, and serving as a means whereby the gage 4 may be held securely in position relative to the base.

Coacting with the gage 4 is a second gage 8 provided with a depending lug 9 adapted to be accommodated within the elongated slot 10 disposed longitudinally of the base 1 at substantially its transverse center and which is adapted, when the occasion requires, to coact with the gage 4 to effectively clamp the work in operative position. As herein disclosed, the requisite movement is imparted to the gage 8 through the medium of the screw member 11, herein disclosed as threaded through the lower portion of the standard 12 and in swiveled engagement with the gage 8, as indicated at 14.

In such instances when it is desired to clamp the base 1 to the work or other supporting member, it will be readily perceived that the gage 4 may be inverted and the supplemental gage 15 employed in connection therewith, such gage 15 being provided with the inturned flanges 16 adapted to be accommodated within the grooves or channels 2 and provided at its forward edge with the depending lugs 17 and having threaded therethrough the clamping screw 18 which is adapted to coact with the under face of the base 1 or to interlock with the threaded opening 19 produced in the under face of the lug 9 carried by the gage 8. In this latter instance, it will be readily perceived that the supplemental gage 15 will be caused to move in unison with the adjustment of the gage 8.

The standard 12, hereinbefore referred to, is herein disclosed as tubular and is rigidly secured adjacent one end of the base 1, and produced in such standard 12 is the elongated longitudinally disposed groove or channel 20, in which is adapted to be projected the extension 21 of the clamping screw 22 threaded through the lower extremity of a sleeve 23 disposed around the standard 12, and whereby it will be readily perceived that the sleeve 23 is effectively held against rotary movement relative to the standard and may be clamped in various ad-

justed positions longitudinally of the standard.

The lower extremity of the sleeve 23 is provided with an outwardly disposed annular flange 24 to afford a circumferential shoulder, upon which rests a split collar 25, threaded into the rear wall of which is a set screw 26 and this screw is hollow to accommodate the plunger 27 having a head 28, between which the outer wall of the set screw is arranged a coil spring 29, the function of which is to normally hold the plunger in engagement with the sleeve.

The collar 25 is held against downward movement upon the sleeve 23 by the flange or shoulder 24 and is provided in register with the inner end of the plunger 27 with a circumferential groove 30 and a series of orifices 31 drilled through the base of the groove and arranged to be engaged by the inner end of the plunger, whereby to lock the sleeve at any angle of adjustment, the orifices being provided for setting the implement for cutting standard miters. If, however, it is desired to cut a miter, which would not be determined by any one of the orifices 31, then the set screw 26 would come into play, as this could be clamped at a point between any two of the orifices and thus firmly hold the collar against turning.

The collar has projecting from it in parallel relation, two ears 32 and 33, between which is arranged a scale arm 34 carried by a face plate 35, the arm being held pivotally connected with the ears by a bolt 36. In order to permit arcuate movement of the scale arm to allow a miter to cut at an oblique angle to the vertical axis of the standard 12, the arm is provided with a grooved slot 37, through which projects a bolt 38 engaged at one extremity by a thumb or wing nut 39.

The upper edge of the arm 34 is provided with a graduated scale 40 coacting with a master mark 41 scored in the ears 32 and 33 and by which the angle of adjustment of the face plate is determined.

Pivotally connected with the face plate 35, one adjacent to each end, is a pair of links 42, the upper ends of which are pivotally connected with the top plate 43 of the frame of the saw guide. The pivotal connection between one of the arms 42 and the plate 43 comprises a bolt 44 and a thumb or wing nut 45, whereby it will be readily perceived that the requisite clamping action may be created in order to effectively maintain the plate 43 in a predetermined position or adjustment relative to the face plate 35.

Projecting forwardly from the face plate 43 at the opposite ends thereof are the vertically spaced ears 45, in each series of which is suitably mounted the upper extremities of the vertically disposed parallel rods 46 depending a predetermined distance below the plate 43. While the rods 46 may be secured to their coacting ears 45 in any manner desired, I prefer to provide each of such rods, adjacent its upper end, with a shoulder 47 adapted to abut one face of the lowermost ear 45, while the upper projected extremity of such rod is upset, as indicated at 48.

The corresponding rods 45 of each set of rods are tied or connected by a plate 49 adapted to abut the shoulders 50 produced on said rods intermediate their length, and maintained in such contact through the medium of the fiber rollers 51 loosely mounted on the lower extremities of the rods and maintained in operative position through the medium of the detachable members 52, herein disclosed as conventional nuts or burs threaded upon the rods.

As is believed to be obvious, a saw may be positioned between the rods 46 with convenience and facility and the rollers 51 reduce to a minimum any friction occurring during the necessary reciprocation of the saw, and in such cases when the saw is a back saw, it will be readily appreciated that the contact of the lowermost shoulders of the back with the plates 49 will limit the depth of the cut or penetration of the saw.

It might be well to state that my device, as herein disclosed, is intended as an improvement on the device as disclosed in my co-pending application, Serial No. 828,855, filed March 30, 1914.

From the foregoing description, it is thought to be obvious that a saw guide constructed in accordance with my invention is of an extremely simple and comparatively inexpensive nature and is particularly well adapted for use by reason of the convenience and facility with which it may be assembled, and it will also be obvious that my invention is susceptible of some change and modification without material departure from the principles and spirit thereof and for this reason I do not wish to be understood as limiting myself to the precise arrangement and formation of the several parts herein shown in carrying out my invention in practice.

I claim:

1. In a saw guide, a base, a standard projecting therefrom, a sleeve mounted for longitudinal movement on the standard but held from rotary movement relative thereto, a collar rotatably mounted on the sleeve, means for maintaining the collar at any desired adjustment relative to the sleeve, an arm pivotally connected for vertical arcuate movement with the collar and carrying a face plate, links pivotally connected with the face plate, a plate carried by the upper ends of the links, a plurality of pairs of forwardly directed transversely spaced ears projecting from the plate, guide rods operatively supported by the ears, plates connect-

ing the guide rods, said plates serving as a means for controlling the depth of a cut, intermediate the lengths of such rods, and rollers carried by the rods below the plates.

2. In a saw guide, a base, a plate adjustably supported by the base, a plurality of pairs of transversely spaced ears projecting from the plate, each of said pairs of ears being provided with alined openings, guide rods having their opposite extremities reduced, certain of said reduced extremities being disposed through the alined openings of the ears, the shoulder afforded by such reduced portions of the rods being in contact with the adjacent ear, while the free extremities of the reduced portions are provided with means coacting with the second ear for holding the rods in operative position, rollers mounted upon the opposite reduced extremities of the rods, and plates connecting the corresponding rods of each pair of ears, said plates being interposed between the rollers and the shoulder afforded by said second reduced portions, said plates serving as a means for controlling the depth of a cut.

In testimony whereof I hereunto affix my signature in the presence of two witnesses.

JOHN E. WILSON.

Witnesses:

ARTHUR HULSIZER,

JOHN BORMLY.

Copies of this patent may be obtained for five cents each, by addressing the "Commissioner of Patents, Washington, D. C."