United States Patent

Scollins

[15] **3,687,079**

[45] **Aug. 29, 1972**

[54] **SECTIONED OBTURATING RING**

[72] Inventor: **John A. Scollins,** Dover, N.J.

[73] Assignee: **The United States of America as represented by the Secretary of the Army**

[22] Filed: **Nov. 20, 1970**

[21] Appl. No.: **91,424**

[52] **U.S. Cl.** **102/49.2,** 102/93
[51] **Int. Cl.** **F42b 13/22,** F42b 31/00
[58] **Field of Search**.....102/49.1, 49.2, 93, 94

[56] **References Cited**

UNITED STATES PATENTS

1,861,522	6/1932	Brandt	102/93
2,798,433	7/1957	Allan	102/93

FOREIGN PATENTS OR APPLICATIONS

488,990	4/1970	Switzerland	102/94

Primary Examiner—Verlin R. Pendegrass
Attorney—Harry M. Saragovitz, Edward J. Kelly and Herbert Berl

[57] **ABSTRACT**

A mortar shell obturating ring comprised of at least two ring segments joined together in an encircling course and received in a groove formed in the main body portion of the shell, the ends of the ring segments being provided with complementally-shaped end sections to permit interlocking interengagement of the ring segments to hold the ring structure securely on the shell before and during firing of the mortar. When the mortar is fired, the obturating ring expands substantially uniformly radially and engages the mortar tube bore to prevent escape of propellant gas around the body of the mortar shell thereby increasing the force with which the shell is propelled from the mortar tube.

4 Claims, 6 Drawing Figures

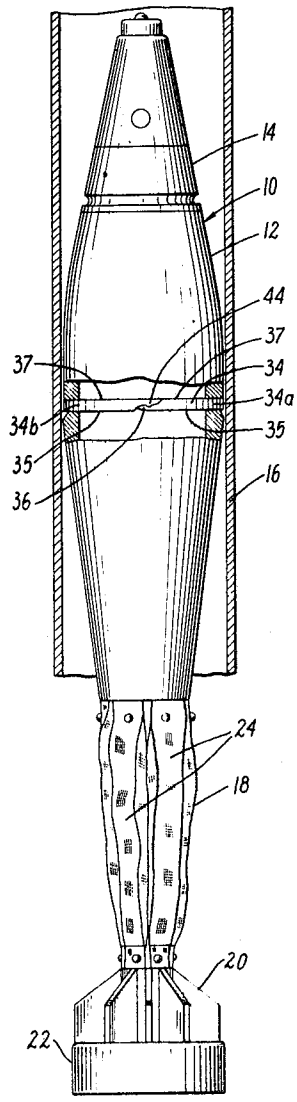

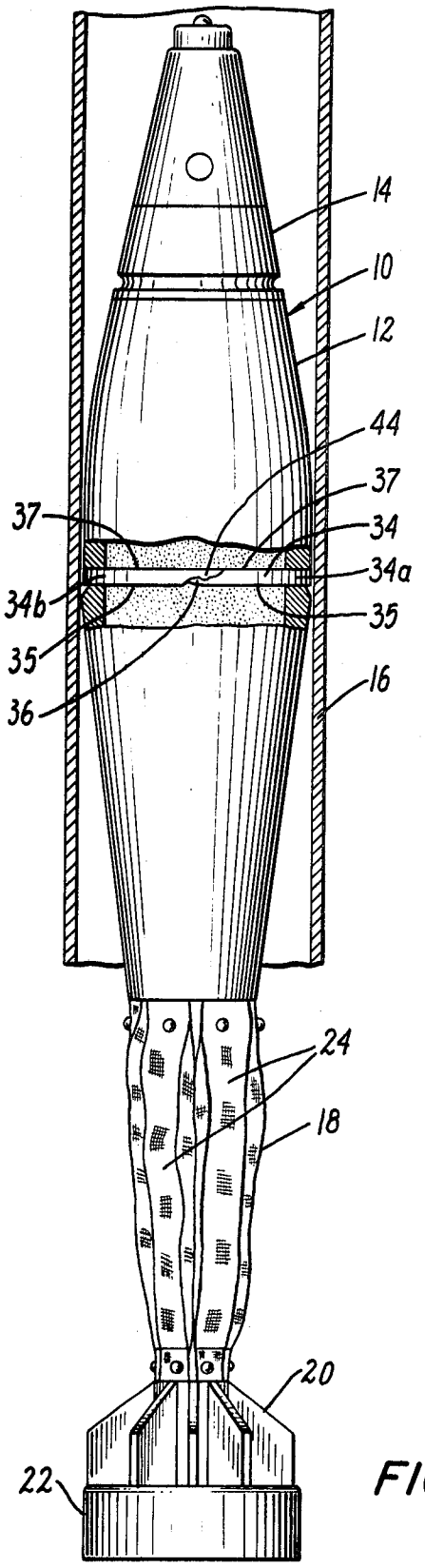

FIG. 1

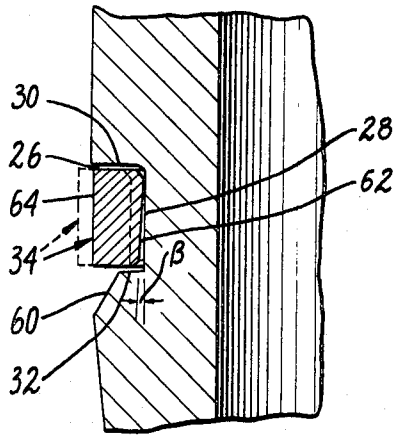

FIG. 2

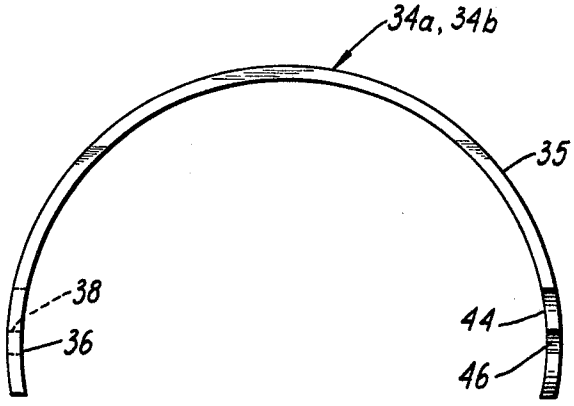

FIG. 3

INVENTOR
JOHN A. SCOLLINS
BY Harry M. Saragovitz, Edward J. Kelly & Herbert Berl
ATTORNEYS

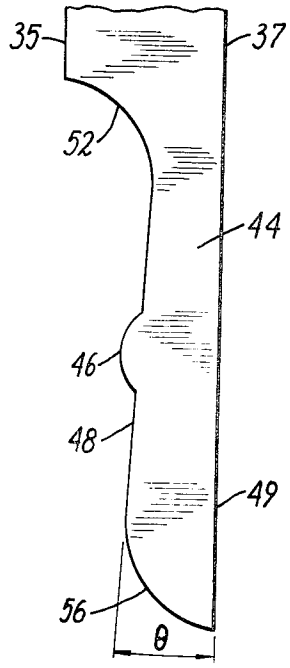

FIG. 4

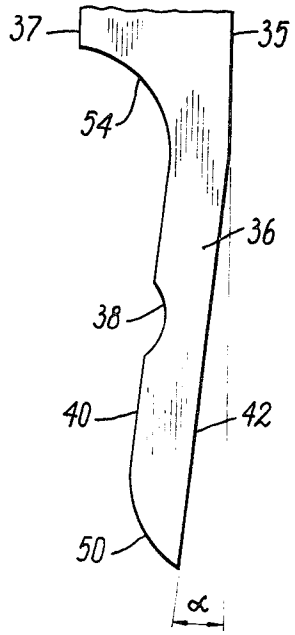

FIG. 5

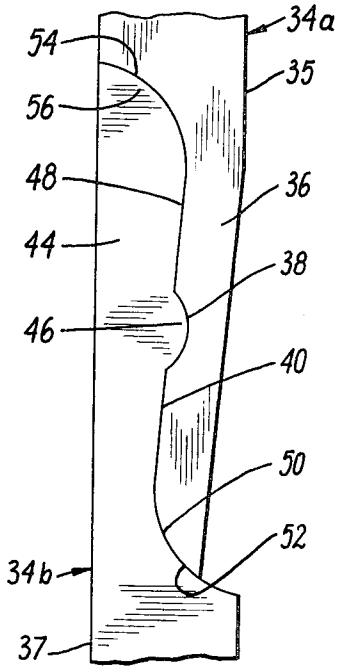

FIG. 6

INVENTOR
JOHN A. SCOLLINS
BY Harry M. Saragovitz,
Edward J. Kelly &
Herbert Berl
ATTORNEYS

SECTIONED OBTURATING RING

The invention described herein may be manufactured, used and licensed by or for The Government for governmental purposes without the payment to me of any royalties thereon.

BACKGROUND OF THE INVENTION

An artillery mortar generally is provided as a smooth bore tube although it is also known to provide it with rifling. The mortar shell or projectile fired from the mortar tube most usually is provided with an enlarged main body portion and a narrower after body portion, the latter including an explosive propellant charge for generating pressurized gas within the mortar tube to propel the projectile therefrom. The after body portion also carries a fin assembly and shroud wherein is positioned a percussion primer employed for igniting the explosive propellant charge when the mortar is fired.

The main body portion of the mortar shell is made such that its maximum diameter is slightly smaller than the bore of the mortar tube to provide clearance for air to escape from the tube around the periphery of the shell main body during the descent of the mortar shell to firing position. When the mortar is fired, the gas generated by the exploded propellant charge propells the mortar shell from the mortar tube. The propelling effect of the gas is to a certain measure diminished by existence of the clearance between the mortar shell main body portion and the mortar tube bore which allows some of the gas to escape around the outside of the mortar shell before the latter exits the mortar tube. If this condition were eliminated, greater propelling effect and hence greater effective mortar range would be possible for a given propellant charge.

To overcome the aforementioned loss of propelling effect, it is known to provide a mortar shell with an obturating ring for the purpose of constricting the clearance space between the mortar tube bore and mortar shell main body during firing. Such known types of obturating rings have not fulfilled the need for a simply constructed, inexpensively fabricated, easily installed and fully service-dependable mortar shell obturating ring. Thus, for example, known type single piece rings present problems of mounting the same on the mortar shell. Further, the problem of retaining segmental type rings secure on the mortar shell so that the ring does not obturate during descent of the shell in the mortar tube has not been overcome satisfactorily. Moreover, such means as have been successful to prevent obturation during descent of the mortar shell in the mortar tube frequently prevent obtainment of obturation following firing of the mortar shell.

The present invention eliminates the shortcomings of prior art mortar shell obturating rings providing such a device which is simple in construction and certain and dependable in operation.

SUMMARY OF THE PRESENT INVENTION

The obturating ring of the present invention comprises two ring segments joined together in an encircling assembly and received in and closely engaging a groove formed in the main body portion of a mortar shell. The ring segments are held in assembled condition by interengaging locking means formed on the ends of each ring segment, the locking means taking the form of sections of reduced width at the ring segment ends. The end section at one end of each ring segment is provided with a curved recess extending laterally inwardly from a side edge of the end section whereas, the other end section of each ring segment has formed thereon a curved cam part extending laterally outwardly from a side edge of such other end section and formed complementally with the recess in the first-mentioned end section. Furthermore, the side edges of the two end sections of the ring segments which carry the respective recess and cam part also are complementally arranged so that the cam part end section of one ring segment can be received in mating connection with the recess carrying end section of the other or second ring segment, and the cam part end section of the second ring segment received in mating connection with the recess carrying end section of the first ring segment to hold the two ring segments in encircling assembly.

To assure retention of the obturating ring in the mortar shell main body groove before and during firing of the mortar, one end section of each ring segment, e.g., the end section carrying the curved recess is laterally offset with respect to the remainder of such ring segment, the degree of offset being such that recess carrying side edge of the end section is more acute with respect to a plane transverse to the mortar shell axis than the cam part carrying side edge of the complementally formed end section of the other ring segment. This, with the ring segments received in the main body groove in assembled condition, the offset end section of one ring segment applies a biasing force against the complemental end section of the other ring segment urging such other ring segment into holding abutment with a wall of the groove, the degree of biasing force being sufficient to preclude radial bodily movement of the ring before firing but insufficient for that purpose following firing.

The obturating ring, by reason of its construction and the type of material from which it is fabricated, is possessed of sufficient resiliency to be expanded substantially uniformly radially to the main body groove during the firing of the mortar to engage the bore of the mortar tube. Normally and before firing, the obturating ring is designed such that it does not extend outwardly of the mortar shell main body portion thereby enabling ready descent of the mortar shell in the mortar tube. However upon firing of the mortar, gases from the explosive propellant charge create a condition of reduced pressure in the mortar tube in the space between the mortar shell and the tube bore. Such reduced pressure pulls the obturating ring outwardly of the groove and is instantaneously supplemented by the entry of high pressure gas into the groove below the ring to complete the radial expansion of the ring structure forcing it into contact with the tube bore. The obturating ring remains in contact with tube bore during the ascent of the mortar shell in the mortar tube and upon discharge of the mortar shell from the mortar tube, the obturating ring segments fly off the mortar shell generally breaking into three or more pieces.

The obturating ring of the present invention in addition to serving the important function of preventing escapement of propellant gas during firing, functions to wipe the mortar tube bore of any residue matter thereon accumulated as an incident of firing, which

residue if present in any measurable amount could prevent a proper descent of a mortar shell in the mortar tube.

To facilitate entry of propellant gas to the mortar shell main body portion groove for expanding the obturating ring during firing, the body of the shell adjacent the rear wall of the groove can be beveled to provide a gas entry course to the groove.

The invention accordingly comprises the obturating ring device possessing the features, properties, and relation of elements which will be exemplified in the device hereinafter described and the scope of the invention will be indicated in the claims.

BRIEF DESCRIPTION OF THE DRAWINGS

The invention and a fuller understanding of its nature and objects will appear more clearly from the following detailed description taken in conjunction with the accompanying drawings, showing by way of example a preferred embodiment of the inventive concept and in which:

FIG. 1 is a longitudinal view partly in section, of a mortar shell provided with an obturating ring made in accordance with the principles of the present invention, the mortar shell being shown received in a mortar tube preliminary to firing of the mortar, the latter being shown in sectional fragmentary view only.

FIG. 2 is a fragmentary sectional view on enlarged scale taken along a longitudinal portion of the mortar shell main body showing the manner in which the obturating ring is received in the main body groove and retained therein before firing.

FIG. 3 is a side edge view of the obturating ring segment which when connected with a like ring segment provides an encircling obturating ring assembly.

FIG. 4 is an enlarged plan view of one end section of the ring segment shown in FIG. 3, more particularly the end section seen from the right in FIG. 3.

FIG. 5 is an enlarged plan view of the other end section of the ring segment as viewed from the left in FIG. 3.

FIG. 6 is an enlarged plan view showing the manner in which one end section of one ring segment interfits or mates with the complementally-shaped end section of a second ring segment to form an encircling ring assembly.

Throughout the following description like reference numerals are used to denote like parts in the drawings.

DESCRIPTION OF THE PREFERRED EMBODIMENTS

The present invention is concerned with providing an obturating ring for an artillery projectile, and more particularly, a mortar shell which is adapted for firing from a smooth bore mortar tube. The obturating ring can be employed on all sizes of projectiles which are intended to be fired from smooth bore artillery utilizing gas pressure as the propelling force. The obturating ring depicted in the drawings and which will be described hereafter is designed for use on an 81 mm. mortar shell, it being understood however that such described use is given by way of illustration and not limitation.

Referring now to FIG. 1, the mortar shell **10** is of known type and construction and is provided with a main shell body portion **12** of relatively elongated configuration, the main body portion **12** tapering or enlarging outwardly from its point of connection with fuse **14** to a point of maximum dimension at about mid-length thereof from whence it tapers inwardly in a rearward direction as shown, the maximum dimension of the main body portion being less than the bore diameter of the mortar tube **16**. The mortar shell also includes an after body portion **18** which is narrower in dimension than the main body portion and which terminates in a fin assembly **20** and shroud **22**. Located in the fin assembly and shroud is a percussion primer (not shown) which is used to ignite an explosive propellant charge carried in incremental sections **24** at the after body portion of the shell when the mortar is fired.

The main body portion **12** of the shell is provided in a region where its diameter is a maximum, with a groove **26** in the surface thereof, the groove extending in an encircling course around the main body portion and desirably being disposed perpendicularly transversely of the axis of the shell, with the opposed side walls **30**, **32** thereof being parallel to a plane transverse to said axis and the base **28** of the groove concentric of said axis, such details of the groove being best noted in FIG. 2. Received in the groove **26** is obturating ring **34**, the ring being comprised of at least two ring segments **34*a*** and **34*b***, the two ring segments being joined together in encircling assembly and closely engaging groove **26**. The obturating ring **34** is made such that at times before the firing of the mortar, it is maintained in the groove **26** without any part of the ring extending outwardly from the groove, such positioning of the ring being shown in solid lines in FIG. 2. Following the firing of the mortar, for the reasons and in the manner to be given in greater detail later, the obturating ring is expanded radially outwardly of the groove **26** to the position shown in dashed lines in FIG. 2 wherein the ring engages the bore of the mortar tube.

According to the present invention, the obturating ring **34** of the present invention is comprised of at least two ring segments **34*a***, **34*b***, the ring segments preferably being identically formed components. The two ring segments **34*a***, **34*b*** are joined together in encircling assembly and for which purpose interengaging or mating end sections are formed on each ring. The arrangement of the end sections of the rings **34*a***, **34*b*** are depicted in greater detail in FIGS. 3–6. Further reference to the ring segment construction will be given in terms of one ring segment only, although it will be understood that at least two ring segments are required to provide a complete encircling obturating ring. Further it will be understood that one end section of one ring segment is intended for complemental engagement with an end section formed on the second ring segment and that such end section of the second ring segment is in all respects like that provided at the other end of the first ring segment.

Each ring segment has an overall semi-annular profile and with the exception of the end sections thereof, is of substantially uniform width thereby providing equal spacing between the ring main side edges **35**, **37**. The end sections of the ring segment are sections of reduced width as can be best noted in FIGS. 4 and 5, the overall width of the end sections being less than about one-half of the overall width of the remainder of the ring segment. One end section **36** of

the ring segment is provided with a curved recess **38** extending laterally inwardly from an inner side edge **40** of the section, the section **36** being provided with an outer side edge **42** arranged generally parallel with the inner side edge **40**, the outer side edge **42** being a terminal portion of ring segment main side edge **35** but angularly inwardly offset from the latter. The other end section **44** of the ring segment has formed thereon a curved, preferably convex curved cam part **46** extending laterally outwardly from an inner side edge **48** of such section, the cam part **46** being formed complementally with the concave recess **38**, and end section **44** having an outer side edge **49** formed in alignment with and as a terminal portion of the ring segment main side edge **37**. The inner side edges **48** and **40** of the end sections **44**, **36** respectively also are formed complementally as smooth surfaces so that the cam part end section **44** of a first ring segment will mate with the recess-carrying end section **36** of a second ring segment with such smooth surfaces in abutment. To further facilitate the mating fit, the end section **36** of each ring segment has a rounded tip end as at **50**, whereas, the other end section **44** of each ring segment has a correspondingly curved base portion **52**. Similarly, each end section **36** includes a curved base part **54** shaped in correspondence to the rounded tip end **56** of the other end section **44**, the aforementioned tip ends and curved bases of each ring segment also engaging in smooth abutment with the complementally shaped structure of a second ring segment when two ring segments are joined together in the manner as depicted in FIG. **6**.

To hold two ring segments in joined encircling assembly, the end sections **36** of the segments cooperate with the end sections **44** to provide a locking means to effect locked joinder of the segments. Thus as illustrated in FIG. **6**, end section **36** of ring segment **34*a*** interfits or mates with end section **44** of ring segment **34*b*** with the recess **38** of the former receiving the cam part **46** of the latter. Similarly, the end section **36** of ring segment **34*b*** interfits or mates with end section **44** of ring segment **34*a*** at a reciprocal location on the shell body. Thus with the ring segments assembled in shell body groove **26**, any force applied circularly of the ring is ineffective to cause disassembly of the ring segments.

The construction of each ring segment **34*a*, 34*b*** is as noted in FIG. **3** such that the inner side edges **48** and **40** of the end sections **44**, **36** respectively face away from each other, or in other words are formed inwardly from opposite ones of the side edges **35**, **37** of the ring segment. This thus provides that identical ring segments can be employed to form a ring assembly. As can be seen in FIG. **1**, the ring segments preferably are positioned when mounted in the groove **26** of the shell main body **12** such that the recess-containing end sections **36** of the ring segments are positioned closer to the after body portion of the shell and the end sections **44** carrying the cam parts are positioned nearer to the fuse end or forward side of the shell.

To assure retention of the obturating ring **34** in the groove **26** before firing of the mortar and particularly so as to preclude obturation of the ring during the descent of the shell in the mortar tube, the end sections of the ring segments embody means for applying a biasing force against the ring segments to hold them in abutment against one of the opposed walls of the groove **26**. The biasing force is provided by the end section **36** of each ring segment which as will be noted in FIG. **5** is laterally offset with respect to the remainder of such ring segment, the degree of offset being such that the recess-carrying inner side edge **40** of section **36** is more acute with respect to a plane transverse to the mortar shell axis than the cam-carrying inner side edge **48** of the end section **44** of the ring segment with which the end section **36** of the ring segment mates or interengages. In this manner the end section **36** of one ring segment in order to be assembled in the groove **26** and engaged with the end section **44** of a second ring segment must be sprung away from the end section **44** to permit for abutment of the complementally shaped edges **48**, **40** and the mating of the cam part **46** with recess **38** to provide a connection as shown in FIG. **6**. When the force which is used to allow for interengagement is released, the offset condition of the end section **36** acts like a spring to apply pressure against the section **44** and force it into holding abutment against the groove wall **30** remote from the section **36**, i.e., the groove at the forward side of the projectile.

The provision of the above-described ring retention means can be discerned readily by referring to FIGS. **4** and **5** from which it will be noted that inner side edge **48** of a ring end section **44** is disposed relatively of ring segment main side edges **37** at an angle θ which is slightly less than the angle α at which inner side edge **40** of complemental ring segment end section **36** is disposed with respect to ring segment main side edge **35**. Thus bringing inner side edges **48**, **40** into abutment results in end section **36** applying a spring biasing force against end section **44**.

The ring segments **34*a*, 34*b*** conveniently can be formed by cold forging or stamping of strip blank material. Such forming operation thus transforms a flat stock strip into a structure with the semi-annular profile shown in FIG. **3**. The ring segment structure is such that when joined together with a like ring segment, it provides an encircling ring possessed of sufficient resilience to be expanded uniformly radially following the firing of the mortar and in the manner to be described in detail shortly. The ring segments can be made from various metal materials including aluminum, steel, and various metal alloys. To enhance sliding contact between the outer broad face **64** of the obturating ring **34** and the bore of the mortar during firing, a face coating of a friction-reducing material such as PTFE can be embodied on the ring. Other friction-reducing materials such as tungsten disulfide also can be used.

The functioning of the obturating ring will now be described. A mortar shell fitted with an obturating ring **34** is loaded in a mortar tube in the conventional manner. During its descent in the tube **16**, the obturating ring **34** lies fully within the groove **26** in the main body portion **12** of the shell as depicted in solid lines in FIG. **2**. As soon as the mortar shell reaches the bottom of the mortar tube and is fired, the explosive propellant charge generates gas to propel the shell upwardly and out of the tube. Initially a certain portion of the highly pressurized gas escapes around the body of the shell creating a condition of reduced pressure along side the obturating ring **34**. Such condition of reduced pressure draws the obturating ring outwardly radially from

groove 26, such condition being instantaneously supplemented by the entry of high pressure gas to groove 26, the gas investing the groove intermediate the obturating ring and the base 28 of the groove. The highly pressurized gas expands the obturating ring substantially uniformly radially of the groove so that its outer face moves into contact with the bore of the mortar tube, such moved position being shown in dashed lines in FIG. 2. With the obturating ring in contact with the bore of the mortar tube, obturation of the outflow of propellant gas from the mortar tube around the periphery of the shell is effected. Hence a greater portion of propelling effect is provided by the pressurized gas. During the upward travel of the shell in discharge from the mortar tube, the engagement of the obturating ring with the mortar tube bore in addition to preventing gas escapement, serves to wipe away from the bore any residue which may have deposited thereon in consequence of previous firings of the mortar. Following passage of the mortar shell from the mortar tube and as soon as the ring containing part of the shell main body passes the mouth of the tube, the effect of the gas pressure in expanding the obturating ring radially causes the ring to destruct, i.e., break up and fly off from the groove 26 of the mortar shell. The obturating ring generally breaks into three or more pieces and becomes detached immediately from the shell upon the departure of the latter from the mouth of the mortar tube.

To facilitate entry of highly pressurized gas to the groove 26 and below the obturating ring so as to expand the latter radially, the projectile main body adjacent the groove wall 32 can be beveled in the direction of the groove as at 60, the bevel merging with groove wall 32 thereby to provide a gas flow course insuring positive and immediate entry of pressurized gas to the groove. Moreover, the inner encircling broad face 62 of the obturating ring as shown in FIG. 2 is not concentric with the axis of the projectile as is the case with the outer broad face 64, but rather is inclined or tapered away from the groove base toward the outer face in the direction of the after body of the shell. This thus insures a small space defined by groove base 28 and encircling face 62 beneath the obturating ring when it is received in the groove for admitting gas under pressure below the obturating ring to expand it radially. The space underlying the obturating ring is provided by an inner broad face 62 of an angle β with respect to groove base 28 as depicted in FIG. 2.

It will be understood that the obturating ring of the present invention can be subject to certain modifications or changes within the scope of the invention. For example, the cam part 46 and complemental recess 38 which provide ring segment locking means could also be shaped as triangular wedges, rectangular cams, etc. Furthermore, more than one cam part could be provided on each end section with a corresponding number of cam-receiving recesses on the other section.

It will thus be seen that the objects set forth above, among those made apparent from the preceding description, are efficiently attained and, since certain changes may be made in the above construction without departing from the scope of the invention, it is intended that all matter contained in the above description or shown in the accompanying drawings shall be interpreted as illustrative and not in a limiting sense.

What is claimed is:

1. In a mortar projectile adapted for firing from a smooth bore mortar tube and having a forward end, a main body portion, and an after body portion containing an explosive propellant charge for generating pressurized gas to propel the projectile from the mortar tube,

said main body portion having a maximum diameter which is smaller than the bore of said tube, said main body portion further having a groove extending in an encircling course in the surface thereof, said groove having a base and opposed side walls,

an obturating ring received in and closely engaging the groove in said main body portion, said obturating ring comprising at least two ring segments joined together in encircling assembly, said ring segments each having inner and outer broad faces of substantially uniform width, and main side edges extending between said broad faces, the ends of one ring segment being provided with sections of reduced width, each of which include an outer side edge provided by terminal portions of opposite ones of said main side edges, said sections further having an inner side edge spaced laterally of said outer side edges, the inner side edges of the sections of reduced width of one of said ring segments smoothly abutting the inner side edges of the sections of reduced width of one of said ring segments smoothly abutting the inner side edges of the sections of reduced width of the other ring segment when said ring segments are joined in assembly, said sections of reduced width shaped complementally to and receivable with sections of reduced width provided on the ends of the other ring segment, said sections of reduced width embodying locking means which includes a cam part projecting outwardly from the inner side edge of the section of reduced width at one end of each ring segment, and a complementally shaped recess extending inwardly of the inner side edge of the section of reduced width at the other end of each ring segment, the cam part at said one end of one ring segment being received in the shaped recess at said other end of a second ring segment and vice versa, for maintaining said ring segments in joined assembly, said ring segments being received in said groove such that the outer broad faces thereof do not extend outwardly of the groove before firing,

said obturating ring being sufficiently resilient to be expanded substantially uniformly radially of said groove into contact with the bore of the mortar tube by explosive propellant gas pressure thereby preventing the escape of explosive propellant gas around the body of the projectile during firing of the mortar.

2. The mortar projectile as set forth in claim 1 wherein the cam part of the section of reduced width at said one end of each ring segment curves convexly from the inner side edge of such section, the recess extending inwardly of the inner side edge of the section of reduced width at said other end of each ring segment being concavely curved.

3. The mortar porjectile as set forth in claim 1 wherein the ring segments comprising said obturating ring are received in said main body groove with the recess carrying sections of reduced width positioned at

the side of the after body portion and with the cam part carrying sections of reduced width positioned at the forward side of the projectile.

4. The mortar projectile as set forth in claim 1 wherein the groove in said main body portion is disposed therein such that the side walls thereof are parallel to a plane extending transversely of the main axis of the projectile, the recess carrying sections of reduced width of said ring segments being offset acutely with respect to said plane and to a degree that the inner side edges of said recess carrying sections are disposed more acutely of said plane than the inner side edges of the cam part carrying sections of reduced width whereby when said ring segments are received in said groove, said recess carrying sections apply biasing forces to said cam carrying sections for urging the latter into holding abutment against the groove wall at the forward side of the projectile.

* * * * *