Dec. 13, 1938. L. L. SALFISBERG 2,140,117

PACKAGE FABRICATOR

Filed Aug. 19, 1936 3 Sheets-Sheet 1

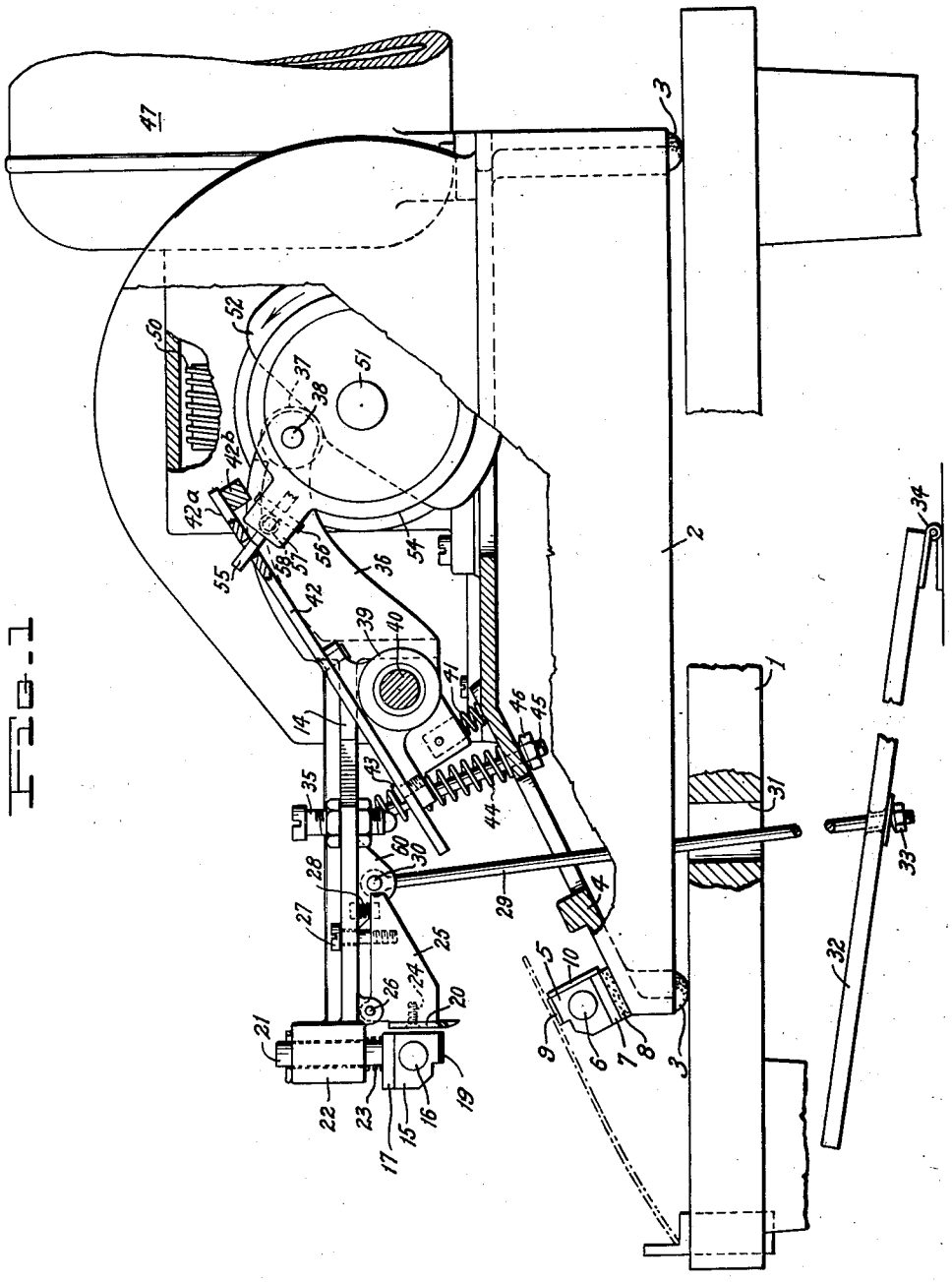

Fig. 1

INVENTOR.
Leroy L. Salfisberg
BY Gordon B Schiebell
ATTORNEY.

Dec. 13, 1938. L. L. SALFISBERG 2,140,117

PACKAGE FABRICATOR

Filed Aug. 19, 1936 3 Sheets-Sheet 2

Fig. 2

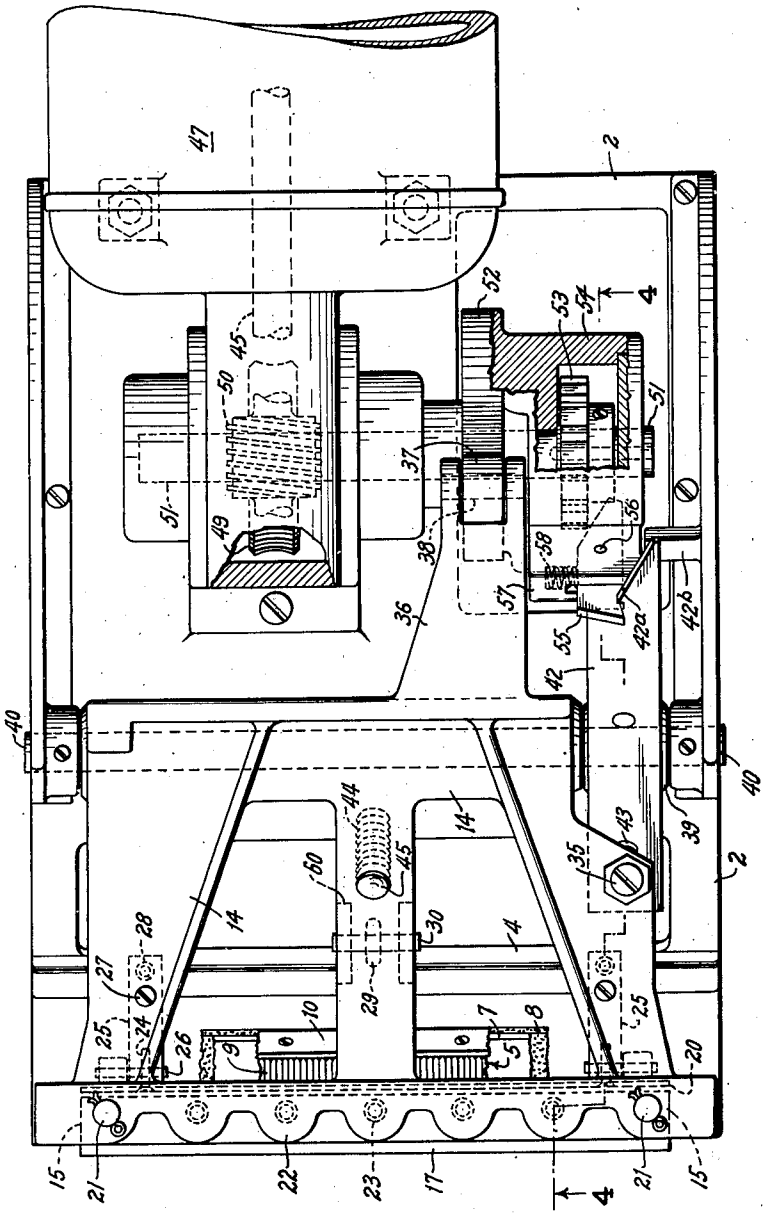

INVENTOR.
Leroy L. Salfisberg
BY Gordon B Scheibell
ATTORNEY.

Dec. 13, 1938. L. L. SALFISBERG 2,140,117

PACKAGE FABRICATOR

Filed Aug. 19, 1936 3 Sheets-Sheet 3

Fig. 3

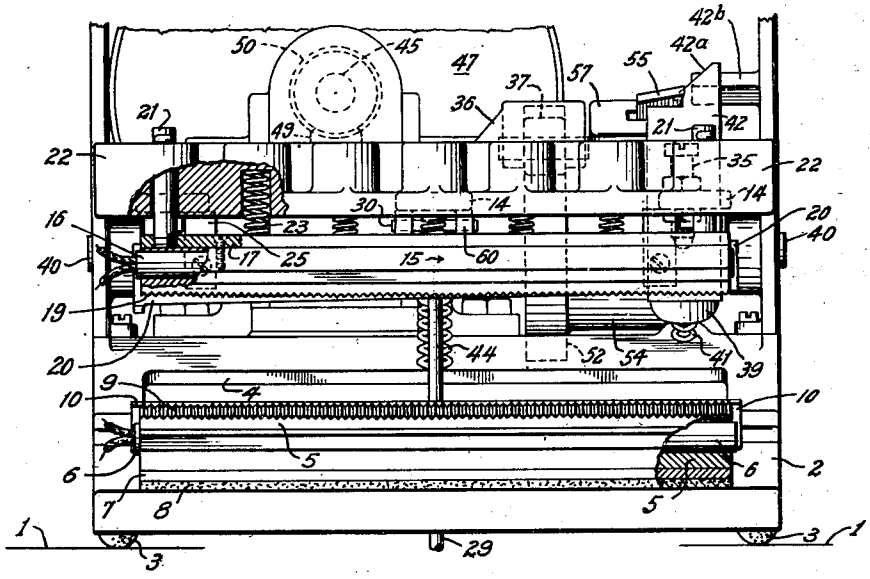

Fig. 4

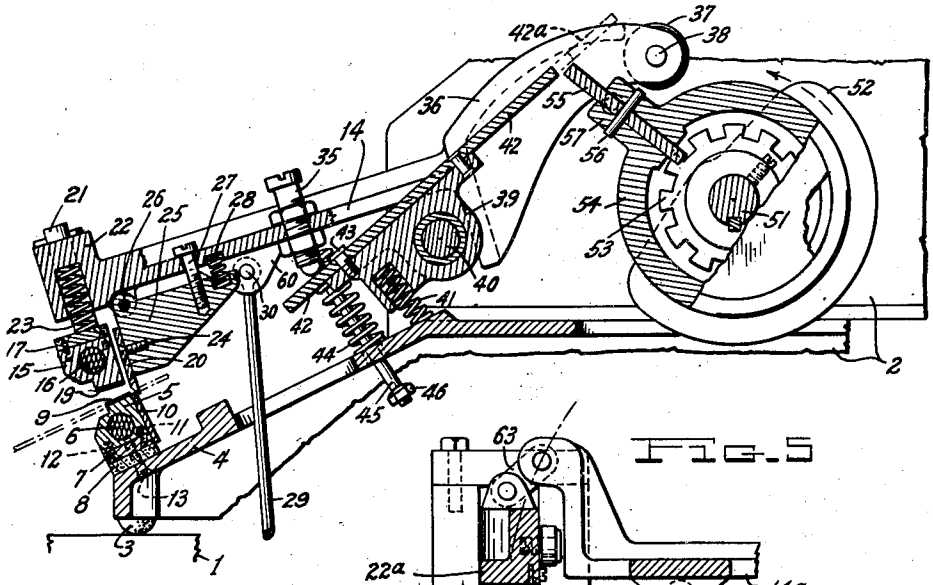

Fig. 5

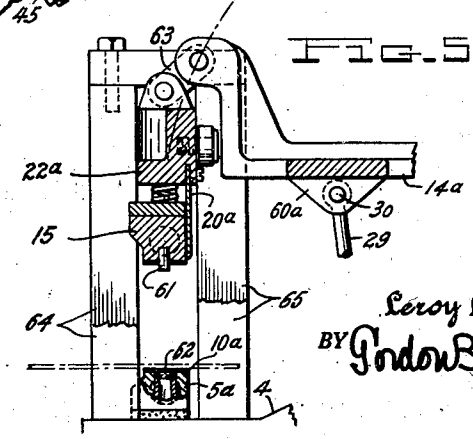

INVENTOR.
Leroy L. Salfisberg
BY Gordon B Schewell
ATTORNEY.

Patented Dec. 13, 1938

2,140,117

UNITED STATES PATENT OFFICE

2,140,117

PACKAGE FABRICATOR

Leroy L. Salfisberg, South Orange, N. J., assignor to Wrap-Ade Machine Company, Newark, N. J., a corporation of Delaware

Application August 19, 1936, Serial No. 96,752

3 Claims. (Cl. 226—56)

My invention pertains in general to package fabrication equipment and specifically relates to a form of combined automatic and manually operated package sealing mechanism.

One object of the invention is to provide a manually controlled power-driven machine organization for heat crimping, sealing and shearing envelope enclosure structures for use in the packaging of commodity articles.

Another object of the invention consists in providing a form of packaging equipment having means for automatically exerting a predetermined force in the sealing of package enclosures.

A further object of the invention comprises providing a machine having manually movable sealing elements and an organization for automatically power driving said elements upon the manual initiation of a sealing operation.

These and other objects will be apparent from the following description in conjunction with the appended drawings in which like reference numerals designate corresponding parts and in which:

Fig. 1 is a side view, partially sectioned, of one embodiment of a package fabricator machine according to this invention;

Fig. 2 is a top plan view, partially sectioned, of the machine;

Fig. 3 is a front view, partially sectioned, of the machine;

Fig. 4 is a vertical sectional view, taken along the line 4—4 of the representation of Fig. 2, showing the crimping and shearing elements in another position; and

Fig. 5 is a vertical view, partially sectioned, of the perforating equipment employed in another embodiment of a machine, according to the invention, in which a punch and die arrangement is incorporated.

This invention contemplates providing means for the rapid and accurate timed sealing and shearing of packages in a heated crimping process, the means embracing a correlated combination of manually and automatically operating units. The machine in accordance with this invention provides for sealing the ends of package enclosures such as fabricated from regenerated cellulose with a heat treatment coating thereon, by the timed application of heat and pressure. The machine also acts to sever the ends of such package enclosures into predetermined lengths, conjointly with the heating, crimping and sealing operations.

Referring to the drawings in detail and particularly to Fig. 1, and for details of parts, to Fig. 4, there is provided a bed plate 1 supported by a suitable underpinning or legs. Superimposed on this bed plate is provided a general mounting frame 2, resting on cushion supports 3. Attached to the general mounting frame 2 is a plate member 4 upon which is secured a lower crimping bar 5 held by screws 11 and 12 extending through an intermediate plate 7, in turn held by screws 13. Between plate 7 and the plate member 4, there is interposed a resilient heat resisting sheet element 8, preferably made of asbestos.

The crimping bar 5 has a cylindrical core extending through its length to receive a heating cartridge 6 which is connected with suitable electric terminals to convey heating current thereto. The upper face 9 of this crimping bar 5 is serrated to provide a crimping effect. The inner side of the bar 5 is provided with a lower shearing knife 10 which cooperates with an upper shearing knife to sever the packaging material.

There is also provided a framework 14, with an extension 36, mounted on the shaft 40. At the front end of framework 14, a plate 17 is movably secured to the framework 14 by pins 21. To this plate 17, a crimping bar 15 is secured by screws. The crimping bar 15 is similar in construction to the lower bar 5, having a cylindrical opening through the central portion thereof to receive an electrical heating cartridge 16. Interposed between the crimping bar 15 and the framework 14 and contained within the bosses 22 of framework 14, Fig. 3, there are provided five coiled springs 23 to cushion the shock when the crimping bars 5 and 15 are brought into engagement.

The framework 14 is provided with two members 25 which are pivoted thereto at one end by pins 26, Figs. 1, 2 and 4, while the other ends thereof are secured to the framework 14 by screws 27, the shanks of which extend loosely through the framework 14. These members 25 are also provided with cushioning springs 28, as shown.

Upon the forward end of the members 25 there is secured an upper shearing knife 20, Figs. 1 and 4, held by screws 24. The cutting edge of the knife 20 is set on an inclined plane so as to progressively shear the packaging material in cooperation with the lower knife 10, as shown in Fig. 4.

At the end of the extension member 36, Figs. 4 and 2, there is provided a roller 37 pivoted thereto by a pin 38. To actuate the framework

14 and the attached crimping bar 15, there is provided a rod 29 adapted to be pivoted at its upper end between a pair of bosses 60 of the framework 14 by a pin 30, Figs. 1 and 2. This rod 29 depends through a slot in the plate member 4, and through an opening 31, Fig. 1, in the bed plate 1, and is connected with a foot treadle 32 by a nut 33; the foot treadle, in turn, having one end secured to a hinge 34.

The foot treadle 32 may be operated to swing the frame 14 so as to cause the upper crimping bar to move into engagement with the lower crimping bar. At a point near the completion of this swinging movement of the frame 14, automatic means are set in motion for causing the power driven engagement of the upper and lower crimping bars for a timed interval to effect a crimping and shearing operation.

The automatic power driven part of the machine will now be described in detail. As shown in Figs. 1 and 4, there is provided a check plate member 42 which is secured to a tilting block 39 by the screw 43 and a suitable rivet. The block is mounted for rotative motion on a fixed shaft 40. A coil spring 41 is mounted at the lower end of the tilting block 39 and contacts a portion of the lower framework 4. Attached to the middle rib of the upper framework 14, Figs. 1 and 2, is a coil spring 44 mounted on a bolt 45 terminating in a nut 46, which moves freely through the lower framework 4. The upper end of spring 44 contacts the upper framework 14 while the lower end of spring 44 contacts the lower framework 4. The object of this spring is to cause the upper framework 14 to resume a normal position after the crimping operation is completed.

The tilting block 39 is actuated and depressed by a bolt 35, Figs. 1 and 2, which is adjustably locked to the upper frame 14. The lower end of bolt 35, contacting the check plate 42 which is mounted on the tilting block 39, depresses the check plate 42 which in turn releases a locking plate 55 when the upper framework is depressed by action of the foot treadle 29.

As shown in Fig. 4, there is provided a toothed clutch member 53 keyed to the driving shaft 51. The shaft 51 has mounted thereon a gear 49, Fig. 2. This gear 49 is engaged by the worm 50, Figs. 1 and 2, which in turn is mounted on the driving shaft 48, Fig. 2, of the motor 47.

In a housing 54, Fig. 4, enclosing the toothed clutch 53, there is provided a plate 55 the lower end of which is adapted to engage teeth of the clutch 53, at timed intervals. The upper end of plate 55 interlocks with the check plate 42 when the upper crimp bar frame 14 is released to a normal upward position. The locking plate 55 extends through an extension 57 of the housing 54 and is pivoted therein by the pin 56. A coiled spring 58, Fig. 2, is mounted in the extension 57 and contacts the edge of the plate 55 to hold the same in engagement with the check plate 42. When the foot treadle acts to depress the upper crimp bar frame, thereby depressing the check plate 42, the plate 42 disengages from plate 55, whereupon the spring 58, acting against the upper end of the plate 55, causes the plate 55 to revolve on the pin 56 whereby the lower end of the plate 55 engages the toothed clutch 53.

As shown in Figs. 1, 2, and 4, a cam member 52, preferably integral with the housing 54, is freely mounted on the shaft 51. When the lower end of the plate 55 engages the clutch 53, which is actuated by the continuously operated driving shaft 51, the cam member 52 is rotated and engages the roller member 37 which causes a further automatic and forced depression of the upper crimp bar frame 14 thus bringing the upper and lower crimping bars into power operated engagement. At the same time the shearing knives are brought into engagement, thereby completing the packaging operation in which the packaging material is sealed, crimped and cut to a desired length.

As shown in Fig. 4, the contour of the cam 52 is such that, at a point nearing completion of a single revolution, the roller 37 is released, thereby permitting the upper crimping block frame to assume an initial upward position under force exerted by spring 44. In this position of the frame 14, the plate 42 engages with the stop-lug 42b shown in Figs. 1, 2 and 3. The stop 42b serves to limit the movement of the plate 42 under influence of the spring 44. As the housing 54 revolves, the outer end of the plate 55 engages with the angular face 42a of the plate 42, as shown in Fig. 2. By virtue of the angular face 42a, the plate 55 is swung about the pin 56 against the force of spring 58 to assume the locked position shown in Fig. 4. Thus, the machine operates to give a power-driven sealing and shearing operation for a definite time interval. However, if the operator holds the crimping frame in a lowered position, the housing will continue to revolve thereby successively transmitting force to the frame from the motor 47 as the cam 52 continues to rotate.

Fig. 4 shows the position of the frams 14 at a point when the plate 55 has just been released from the check plate 42. In this position, the crimping bar 15 is in close proximity with the crimping bar 5 so that the fingers of the operator cannot be accidentally inserted therebetween. In this way, the power driven actuation of the frame 14 is initiated at a safety position and without danger of the operator's hands being injured by accidental insertion between the crimping bars.

Fig. 5 represents a modified form of the invention in which the crimping bar 15 depends from a block 22a which, in turn, is supported by toggles 63. The toggles 63 are supported by the end of a frame 14a which is a modified form of the frame 14. In this arrangement, the bar 22a is slidably mounted for movement between upright members 64 and 65. As the frame 14a is swung about its axis, in the same manner that frame 14 is actuated in Fig. 4, a rectilinear motion is imparted to the crimping bar 15a so as to come into engagement with the crimping bar 5a. In the construction shown in Fig. 5, the upper crimping bar 15a is provided with a punch element 61 for engagement with a die hold 62 in the crimping bar 5a. This punch is provided for the purpose of perforating the packaging material at the time it is sealed and crimped.

In the operation of the severing mechanism of the invention, the packaging material is positioned between the crimping bars 5 and 15. This packaging material may be in the form of a preformed tubular structure of regenerated cellulose material provided with a thermo-plastic coating so that the action of the heated crimping bars 5 and 15 serves to seal the tubular structure to provide individual envelopes, it being noted that the knives 10 and 20 cut these envelopes into desired lengths along lines adjacent the sealing areas. When the packaging material has been placed between the crimping bars 5 and 15, the treadle 32 is depressed so as to lower the upper framework 14. At a predetermined point of movement

of frame 14, the plate 55 is released so as to enable the clutch mechanism to transmit forces from the driving motor 47 to the cam 52. The cam 52 is thereby rotated to cause the forced engagement of the bars 5 and 15 as well as the engagement of the knife elements 10 and 20. As the operator manually releases the frame 14, the cam 52 will complete a single revolution and then come to rest, as before pointed out. However, if the frame 14 is held in a downward position by the operator, the cam 52 will continue to revolve until the frame 14 is mechanically released.

The foregoing mechanism affords an arrangement for effecting the efficient and rapid fabrication of packages, especially where manual supervision and control is desired. The sealing and crimping operations are manually initiated but actually effected and completed by the automatic mechanism which produces packaging operations of predetermined characteristics.

Although a preferred form of the machine has been disclosed, various equivalent structures may be produced without departing from the intended scope of the invention. I do not, therefore, desire to limit myself to the foregoing except as may be pointed out in the appended claims.

What I claim as new and original and desire to secure by United States Letters Patent is:

1. A sealing mechanism comprising, sealing members, a reciprocative support for at least one of said sealing members, an eccentric for moving said support to cause said members to engage, a motor, a clutch for coupling said motor and eccentric and a clutch control device operable by predetermined manual movement of said support for engaging said clutch including means adapted to be released after predetermined rotation of said eccentric, to disengage said clutch, and including means for preventing operation of said last mentioned means when said sealing members are held in proximity to each other.

2. Sealing mechanism comprising, a reciprocative sealing press, a rotatable cam device for actuating said press, a motor, a clutch included between said motor and cam device, mechanism for controlling said clutch including a controlling part carried by said cam device and adapted to be tripped when said press is in predetermined position to close said clutch for a predetermined movement of said cam device.

3. A sealing mechanism comprising, a motor, a driver member coupled with said motor, a rotary cam device, a trip carried by said device for coupling said driver and cam device, a catch for holding said trip in an uncoupling position, mutually engageable sealing means including a reciprocative press having a cam rider and having parts for actuating said catch to release said trip when said press is in predetermined position to permit said cam to be driven by said motor for actuating said press in a sealing operation.

LEROY L. SALFISBERG.