July 8, 1930. J. SHAKESPEARE 1,770,219

APPARATUS FOR THE MANUFACTURE OF CONCRETE BUILDING BLOCKS AND THE LIKE

Filed Oct. 22, 1927 4 Sheets-Sheet 1

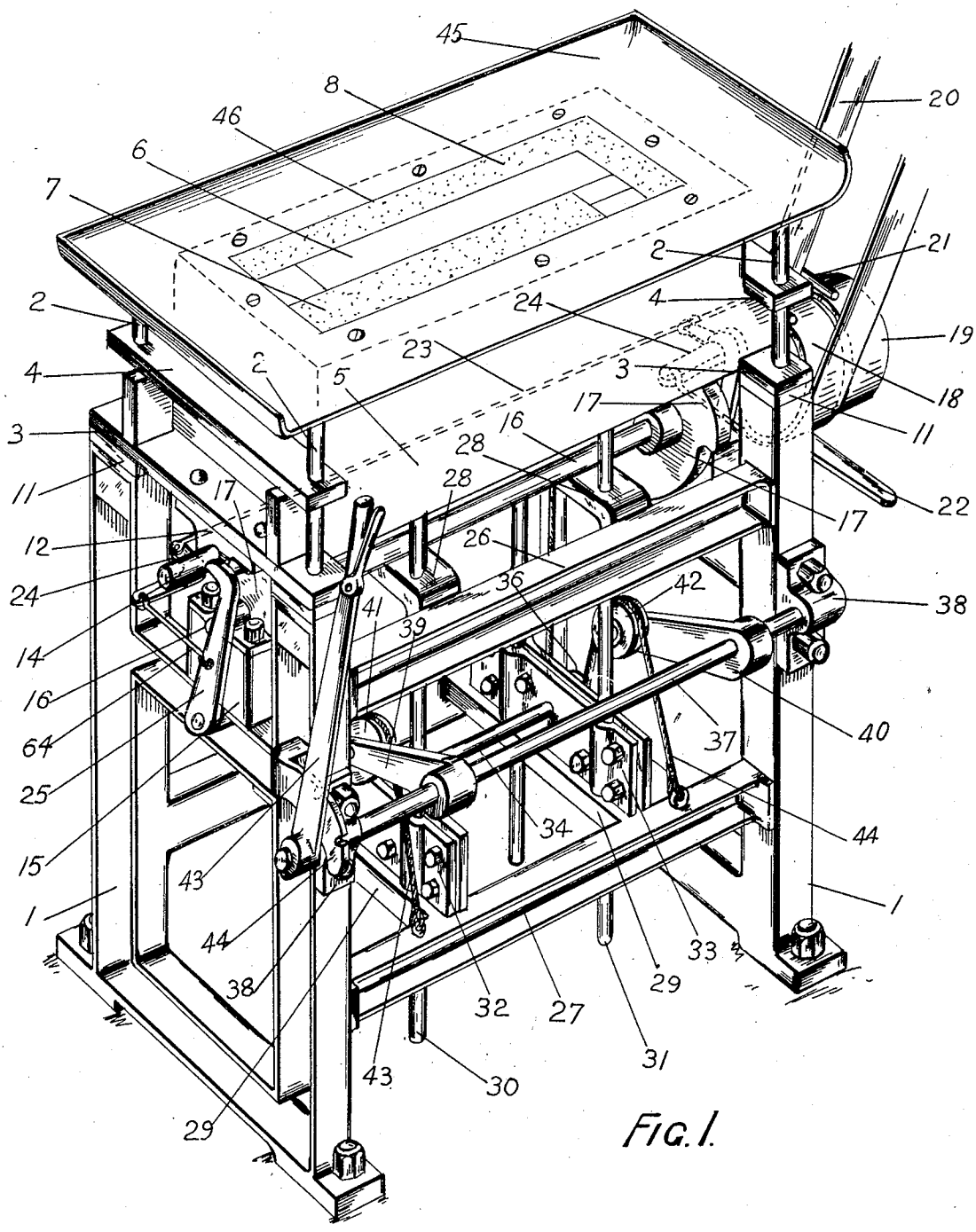

FIG. 1.

J. Shakespeare
INVENTOR.

By: Marks & Clerk
Attys.

July 8, 1930. J. SHAKESPEARE 1,770,219

APPARATUS FOR THE MANUFACTURE OF CONCRETE BUILDING BLOCKS AND THE LIKE

Filed Oct. 22, 1927 4 Sheets-Sheet 2

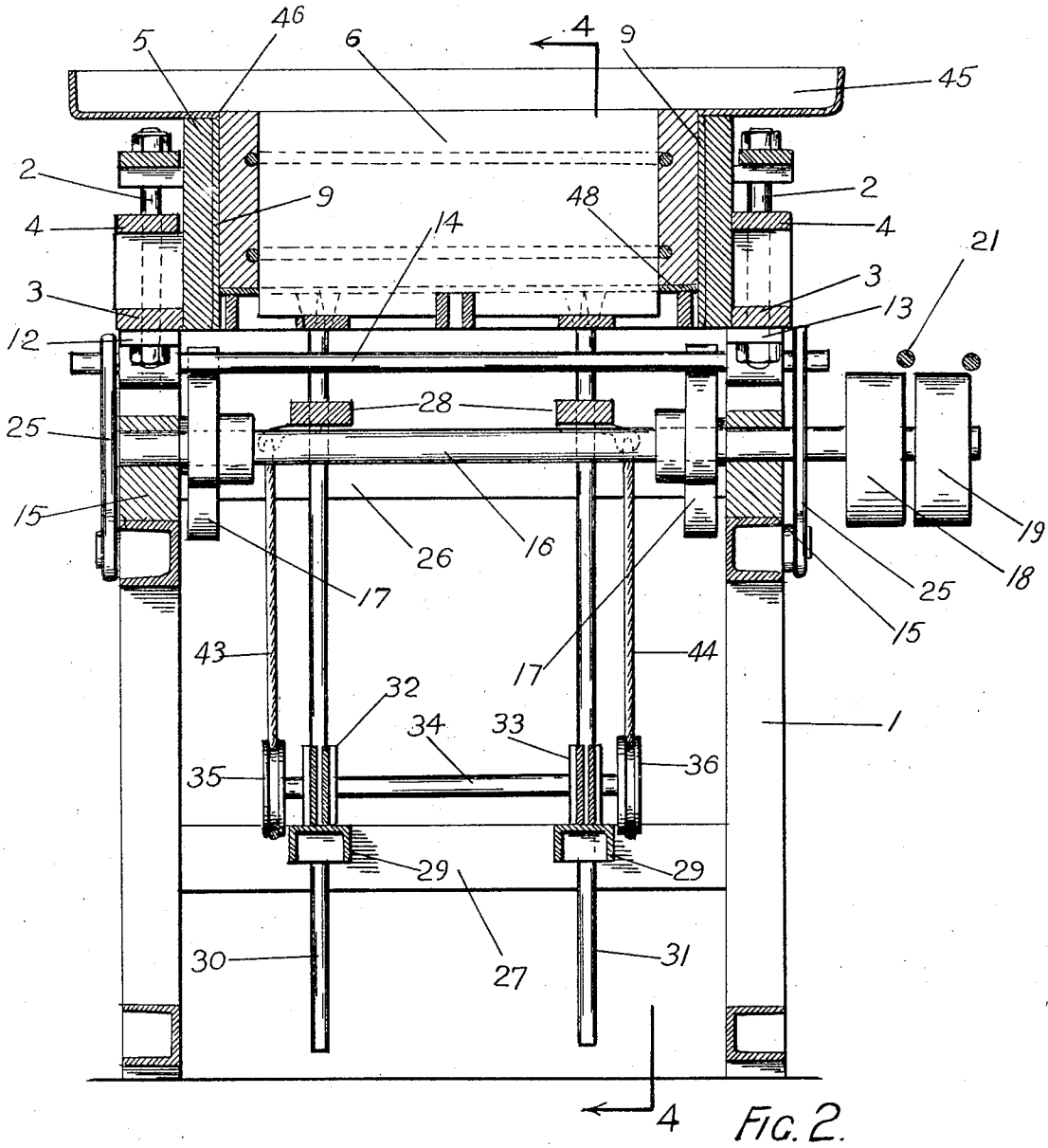

FIG. 2.

J. Shakespeare
INVENTOR

By: Marks & Clark
Attys.

July 8, 1930. J. SHAKESPEARE 1,770,219

APPARATUS FOR THE MANUFACTURE OF CONCRETE BUILDING BLOCKS AND THE LIKE

Filed Oct. 22, 1927 4 Sheets-Sheet 3

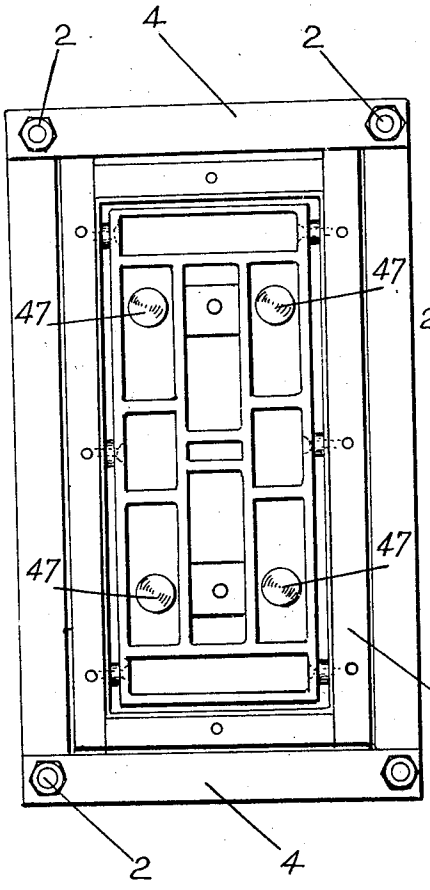

FIG. 3.

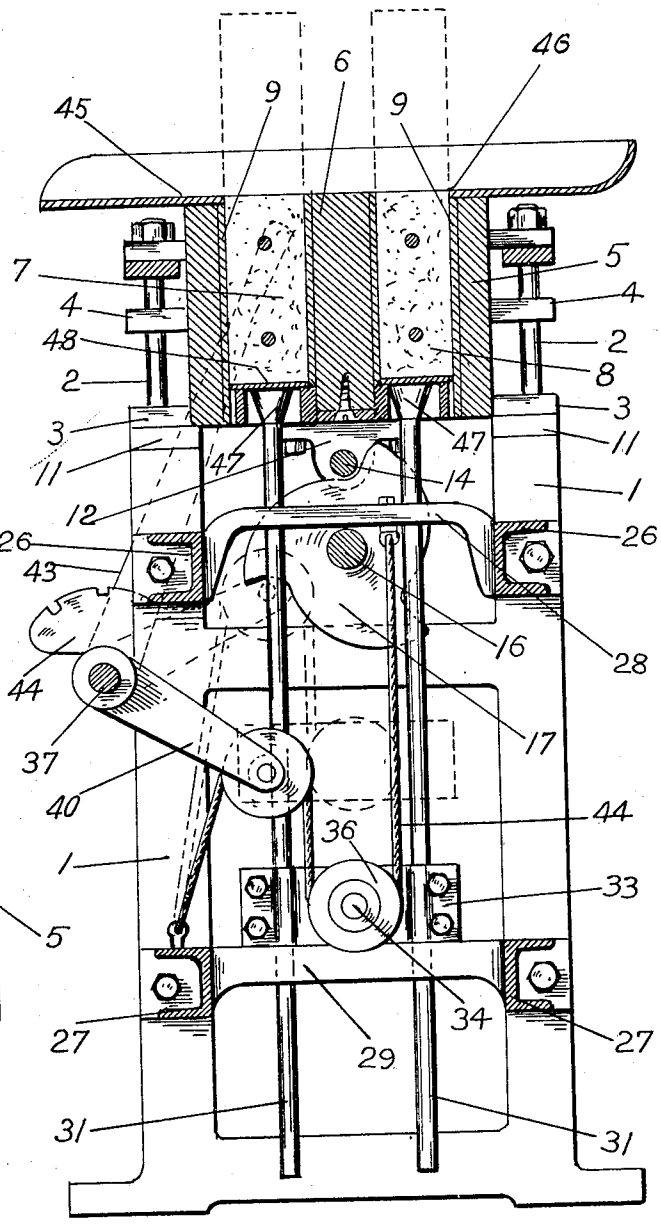

FIG. 4.

J. Shakespeare
INVENTOR.

By: Marks & Clark
Attys.

July 8, 1930. J. SHAKESPEARE 1,770,219

APPARATUS FOR THE MANUFACTURE OF CONCRETE BUILDING BLOCKS AND THE LIKE

Filed Oct. 22, 1927 4 Sheets-Sheet 4

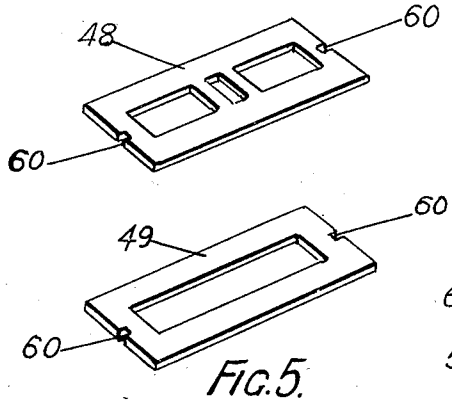

FIG. 5.

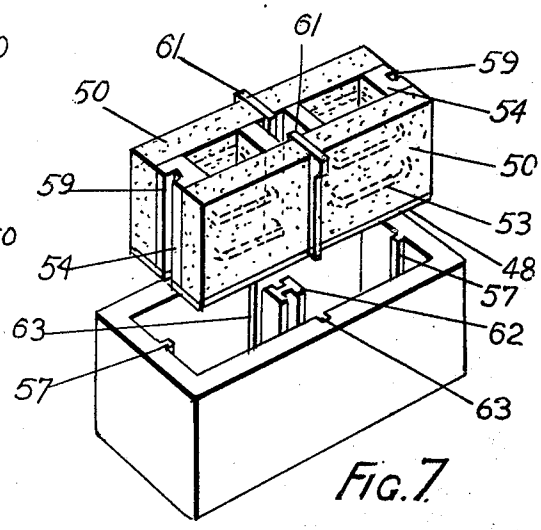

FIG. 7.

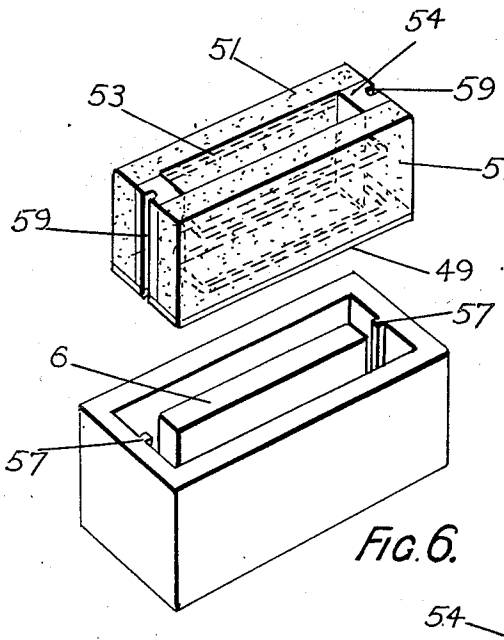

FIG. 6.

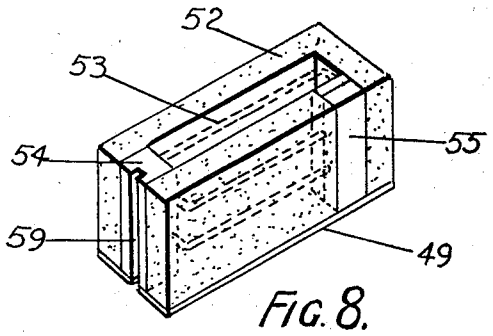

FIG. 8.

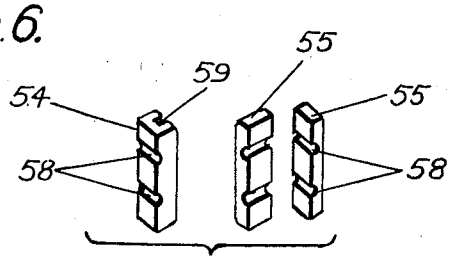

FIG. 9.

J. Shakespeare INVENTOR.

By Marks & Clerk Attys.

Patented July 8, 1930 1,770,219

UNITED STATES PATENT OFFICE

JOHN SHAKESPEARE, OF CANBERRA, NEW SOUTH WALES, AUSTRALIA

APPARATUS FOR THE MANUFACTURE OF CONCRETE BUILDING BLOCKS AND THE LIKE

Application filed October 22, 1927, Serial No. 227,965, and in Australia July 25, 1927.

This invention relates to apparatus applicable for the manufacture of concrete building blocks or the like. The principal object of the invention is the provision of apparatus whereby the blocks can be moulded expeditiously and cheaply and after having been moulded can be discharged from the apparatus.

Referring to the accompanying drawings, Fig. 1 is a perspective view of the apparatus; Fig. 2 longitudinal section; Fig. 3 plan with tray and pallets removed; Fig. 4 section on line 4—4, Fig. 2; Fig. 5 perspective views of removable pallets; Fig. 6 perspective view of mould box and two reinforced blocks mouldable therein with removable pallet below; Fig. 7 view illustrating mould box and four reinforced blocks mouldable therein with removable pallet below; Fig. 8 view of reinforced hollow block and removable means for temporarily holding reinforcing wires; and Fig. 9 perspective view of means for holding reinforcing wires.

A main framing 1 of suitable construction is provided; the head of such framing has fixed thereto at opposite ends the vertically disposed guide rods 2 which pass through openings in cross-bearers 3 and 4 on the opposite ends of the mould box 5. The latter may be provided with a partition 6 (Figs. 1, 4 and 6) and with separate moulding divisions 7 and 8 and the mould box 5 is also lined with metal 9. Rubber buffers 11 or the like are furnished in association with the framing 1 with which the bearers 3 may contact on vertical movements being imparted to the box 5. Fixed to the mould box 5 is a tray 45 upon which may be placed material to be fed to the said box, the said tray having an opening 46 therein.

Secured to the cross-bearers 3 are bearings 12 and 13 for the bar 14. On the framing 1 at opposite ends thereof are bearings 15 for a rotatable shaft 16 which has fixed thereto two or more cams 17; such cams during rotation of the shaft 16 contact with the bar 14 and at intervals raise and lower the mould box 5 whereby material to be moulded in such box is compacted without separate tamping and air bubbles in the material are caused to rise to the surface thereof. The shaft 16 may have fitted thereto fast and loose pulleys 18 and 19 with which is associable the driving belt 20. A belt shifter 21 with operable handle 22 has associated therewith a link rod 23 having pivoted thereto one end of a pair of bell-crank levers 24 whose opposite end is pivoted to links 64 which are also pivoted to hooks 25 separately pivoted to the opposite ends of the framing 1. Such hooks 25 are adapted to engage the opposite ends of the bar 14 when the belt 20 is being moved from the fast pulley 18 to the loose pulley 19 upon operation of the handle 22 which operates the belt shifter 21. When the hooks 25 are in engagement with the bar 14 the mould box 5 is held firmly against upward movement thereof.

The main framing carries upper longitudinal members 26 and lower longitudinal members 27 with which are respectively associated the upper transverse members 28 and the lower transverse members 29 which are located at opposite ends of the framing 1. Said members 28 and 29 serve as bearings for the oppositely disposed pairs of vertical rods 30 and 31; the pairs of rods 30 and 31 have secured to them respectively the elements 32 and 33 which serve as bearings for a shaft 34 whose opposite ends carry a grooved wheel 35 and 36 or the like. Forwardly of the framing 1 is a rotatable shaft 37 journalled in bearings 38 on the said framing. Such shaft has fixed thereto one end of a pair of arms 39 and 40 whose other end carries grooved wheels 41 and 42 or the like. Ropes 43 and 44 attached at opposite ends to the members 28 and 29 respectively pass over the wheels 35 and 36 and 41 and 42. On the shaft 37 is fixed an operating handle 43 cooperating with a notched quadrant 44 fixed to the main framing 1. The heads of the rods 30 and 31 may be formed with conical or other suitable bearers 47 for removable pallets 48 and 49 which fit loosely in the open bottom of the mould box 5.

In Fig. 5 forms of removable pallets 48 and 49 are shown, the pallet 48 being utilizable when say a series of blocks 50 are to be moulded simultaneously as shown in Fig. 7,

and the pallet 49 being usable when blocks 51 (Fig. 6) and 52 (Fig. 8) are to be moulded. If the blocks are to be reinforced removable liners for temporarily retaining reinforcing wires 53 are provided. Such liners may be in one single piece 54 or in duplicate pieces 55 (Figs. 8 and 9) with grooves 58 therein. Should hollow blocks be required core pieces may be furnished to fit the mould boxes 5; said boxes may be furnished with ribs 57 with which the liners 54 may cooperate through the grooves 59 therein, the pallets 48 and 49 being also grooved at 60 to enable them to be fitted about their ends to the ribs 57. If a series of blocks 50 are to be moulded (Fig. 7) spacers 61 and 62 may be furnished, the mould box 5 having grooves 63 to receive the spacers 61, and the spacers 62 also having grooves to receive the spacers 61.

In operation, when blocks are to be moulded in the mould box 5, such box is located in its lowermost position on the framing 1, the shaft 16 being stationary. The removable pallets with liners and spacers and cores and reinforcing wires, if these should be required, are placed in the mould box 5. The material of which the blocks are to be constructed may then be fed to the mould box 5 from the tray 45. Upon detachment of the hooks 25 from the bar 14 through operation of the belt shifter 21 by manually operating the handle 22, power is applied to the shaft 16 and the latter is rotated whereby the cams 17 thereon are also rotated; these cams cooperate with the bar 14 which is associated with the cross-bearers 3 attached to the mould box 5 and the latter is thus reciprocated or vibrated vertically whilst the cams 17 are rotating. Material in the mould box 5 is thus compacted without separate tamping and air bubbles removed therefrom; any surplus material fed to the mould box 5 is also deposited on the tray 45.

When the desired blocks have been so moulded, the handle 22 is again operated to shift the belt 20 onto the loose pulley 19 whereby rotation of the shaft 16 will cease and simultaneously the hooks 25 will engage the bar 14 and hold the mould box 5 against upward movement thereof.

The moulded blocks together with the removable pallets may then be ejected from the mould box 5 by operating the lever 43 whereby the shaft 37 is rotated and the arms 40 associated therewith are arcuately moved and the ropes 43 and 44 are thus drawn on and the pairs of rods 30 and 31 elevated to force the removable pallets and moulded articles with any liners or spacers or cores thereon from the mould box 5.

After such ejection of the moulded blocks the pallets and liners and spacers and cores may be removed from the moulded blocks, and the pallets may then be reinserted within the mould box 5 for the moulding of further blocks, after the rods 30 and 31 have been returned to normal lower position thereof by the operation of the lever 43 in opposite direction.

What I claim as my invention and desire to secure by Letters Patent is:—

1. Apparatus for manufacturing concrete blocks and the like comprising a frame, an open bottomed mould box supported on said frame, a removable bottom slidably fitting within the mould box, means for reciprocating the mould box on said framing after mouldable material has been fed to said box, and means for ejecting the false bottom with moulded block thereon from the mould box including two pairs of rods slidable vertically on the framing, a rotatable shaft with control handle thereon supported on the framing, radial arms fixed to the shaft and carrying rotatable means, means associated with each pair of said rods and carrying rotatable means, and flexible means connected at opposite ends to the framing and passing over the said rotatable means, and adapted when the rotatable shaft is operated to enable the pairs of rods to be elevated on the framing and to eject the false bottom and moulded block thereon from the mould.

2. Apparatus for manufacturing concrete blocks and the like, comprising a framing, an open bottomed mould box supported on the framing, a driving shaft rotatably mounted in the framing, a plurality of cams mounted on the driving shaft, a bar fixed to the mould box and adapted to be engaged during the rotation of the shaft to reciprocate the mould box, means for releasably holding the mould box rigid with respect to the framing, means for controlling the rotation of the shaft, and a lever mechanism between the controlling means and the holding means for effecting automatic engagement of the holding means on the stopping of the rotation of the shaft.

3. Apparatus for manufacturing concrete blocks and the like, comprising a framing, an open bottomed mould box supported on said framing, a driving shaft rotatably mounted in the framing, a plurality of cams mounted on the driving shaft, a bar supported horizontally of and rigidly attached to the mould box and adapted to be engaged during the rotation of the shaft to reciprocate the mould box, means for holding the mould box rigid with respect to the framing when the cams have been put out of action and it is desired to eject the moulded block including pivotally mounted hooks adapted to engage the ends of the bar, means for controlling the rotation of the shaft, and a lever mechanism between the controlling means and the hooks for effecting automatic engagement of the hooks on the stopping of the rotation of the shaft.

4. Apparatus for manufacturing concrete blocks and the like, comprising a framing, an

open bottomed mould box supported on the framing, a movable bottom slidably fitted within the mould box, a driving shaft rotatably mounted in the framing, a plurality of cams mounted on the driving shaft, a bar fixed to the mould box and adapted to be engaged by the cams during the rotation of the shaft to reciprocate the mould box, means for holding the mould box rigid with respect to the frame when the cams have been put out of action, means for ejecting the movable bottom with the moulded block thereon from the mould box, comprising rods engaging the said movable bottom and slidable vertically in the framing, a rotatable shaft supported on the framing and fitted with a control handle, lateral arms rigidly attached to the latter shaft and carrying rotatable members, means associated with the rods and also carrying rotatable members, and flexible means connected at opposite ends thereof to the framing and passing over the rotatable members and adapted to enable the rods to be moved vertically when the rotatable shaft is operated so as to facilitate the ejection of the said movable bottom and the moulded block thereon from the mould box.

In testimony whereof I affix my signature.

JOHN SHAKESPEARE.