677205

AUSTRALIA

PATENTS ACT 1990

NOTICE OF ENTITLEMENT

I, **Iver Hansen**, the applicant/Nominated Person in respect of Application No. 43602/93 state the following:-

The Nominated Person is entitled to the grant of the patent because the Nominated Person is the inventor.

The Nominated Person is entitled to claim priority from the application listed in the declaration under Article 8 of the PCT because the Nominated Person made the application listed in the declaration under Article 8 of the PCT, and because that application was the first application made in a Convention country in respect of the invention.

DATED this NINTH day of JANUARY 1995

Keith L. Heslie

.....

a member of the firm of DAVIES COLLISON CAVE for and on behalf of the applicant(s)

(DCC ref: 1709682)

AU9343602

(12) PATENT ABRIDGMENT (11) Document No. AU-B-43602/93
(19) AUSTRALIAN PATENT OFFICE (10) Acceptance No 677205

(54) Title
PORTABLE AIR CONDITIONER

International Patent Classification(s)
(51)[6] A62B 007/10 A61M 016/00
(51)[6] F24F 003/16

(21) Application No. : 43602/93 (22) Application Date : 01.06.93

(87) PCT Publication Number : WO93/24168

(30) Priority Data

(31) Number	(32) Date	(33) Country
921853	01.06.92	NO NORWAY

(43) Publication Date : 30.12.93

(44) Publication Date of Accepted Application : 17.04.97

(71) Applicant(s)
IVER HANSEN

(72) Inventor(s)
IVER HANSEN

(74) Attorney or Agent
DAVIES COLLISON CAVE , 1 Little Collins Street, MELBOURNE VIC 3000

(56) Prior Art Documents
US 5002049
US 4331141
US 5394870

(57) Claim

1. A personal portable air purifying apparatus with a carrying arrangement, e.g. including a neck strap, for delivery of purified air to the user's head/facial area, comprising a filter/fan unit for affixing to the chest of the user, said unit adapted to direct a concentrated stream of purified or conditioned air toward the user's mouth and nose and an air current steering device.

5. Apparatus according to claim 4 characterized in that said air current steering devices include an electronic control means, comprising detectors for head movement of the user and controllable devices in or by an air outlet orifice for changing air fanning direction.

14. A portable fan for directing a forced air stream toward a user's face, comprising:

(1) a fan unit having a motorized fan, said fan unit having means for positioning said fan unit on the chest of the user;

(2) an air inlet in said fan unit;

(3) an air outlet in said fan unit, wherein air flows into said air inlet and flows out through said air outlet by action of said motorized fan; and

.../2

(4) means connected to said fan unit and positioned entirely below the face of the user when said fan unit is positioned on the chest of the user for directing said forced air stream toward the user's face.

OPI DATE 30/12/93 APPLN. ID 43602/93
AOJP DATE 10/03/94 PCT NUMBER PCT/NO93/00088

AU9343602

INTERNATIONAL APPLICATION PUBLISHED UNDER THE PATENT COOPERATION TREATY (PCT)

(51) International Patent Classification 5 :
A61M 15/02, A62B 7/00
F24F 3/16

A1

(11) International Publication Number: WO 93/24168

(43) International Publication Date: 9 December 1993 (09.12.93)

(21) International Application Number: PCT/NO93/00088

(22) International Filing Date: 1 June 1993 (01.06.93)

(30) Priority data:
921853 1 June 1992 (01.06.92) NO

(71)(72) Applicant and Inventor: HANSEN, Iver [NO/NO]; Gjerdalsveien 3, N-3442 Hyggen (NO).

(81) Designated States: AT, AU, BB, BG, BR, CA, CH, CZ, DE, DK, ES, FI, GB, HU, JP, KP, KR, KZ, LK, LU, MG, MN, MW, NL, NO, NZ, PL, PT, RO, RU, SD, SE, SK, UA, US, VN, European patent (AT, BE, CH, DE, DK, ES, FR, GB, GR, IE, IT, LU, MC, NL, PT, SE), OAPI patent (BF, BJ, CF, CG, CI, CM, GA, GN, ML, MR, NE, SN, TD, TG).

Published
With international search report.
With amended claims.
In English translation (filed in Norwegian.

677205

(54) Title: PORTABLE AIR CONDITIONER

(57) Abstract

A personal portable air conditioner or air purifier with a carrying arrangement, which includes a neck strap (11), delivers conditioned or purified air to the head/facial area of the user. The apparatus consists of a filter/fan unit (8, 2), arranged to direct a concentrated flow of conditioned or purified air toward the user's mouth and nose. The filter/fan unit may also be kept secure in its position by a lower belt (fig. 4) which is included in the carrying arrangement, or for instance by using braces or a tight fitting pocket in a useful position. The filter/fan unit is also equipped with a rapid fastening arrangement, for instance a Velcro® attachment (20), for one or several additional accessories for air regulation included as optional parts of the apparatus.

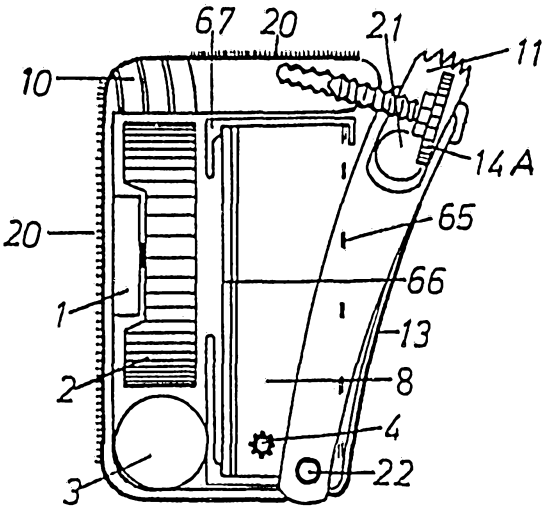

PORTABLE AIR CONDITIONER

This invention is a portable air conditioning or air purifying unit for persons with health problems due to air quality. These health problems include headache, fatigue, depressions, etc. and possibly some types of allergic and asthmatic reactions as well.

To improve air quality there are many devices available. However, most have the common disadvantage of purifying air only in the immediate surroundings without always securing sufficient purification and improvement of air closest to the users head/facial and breathing area.

Even when using expensive stationary air conditioners and purification equipment, users may still breathe polluted and noxious air when for instance cigarette smoke comes between the user and the air purifying unit.

Having some health problems due to air pollution, the inventor has been experimenting since 1977 making both stationary and portable air purifiers. He came to the conclusion that he benefited most when using an air purifier close to his breathing organs. Therefore, he made air purifiers smaller and portable, because other purifiers on the market were stationary and consequently did not solve the health problems mentioned above.

In a German publication, ***DE 27 33 729 B 2***, a stationary air purifier with a combination of ionizer and fan has been presented earlier. This purifier does not solve the above mentioned problems as it is stationary.

The inventor designed several small air purifiers which are portable and use a neck strap. He also designed portable ionizers having certain similar features as those types which were later patented by others, see Norwegian laid-open publication # ***167246*** and international publication # ***WO 92/16251***. According to the inventor's experience, none of these ionizers offer a satisfactory solution to health problems like headache, fatigue, and other discomfort related to air pollution. This lack of effect also seems to be confirmed by doctors that have made investigations in this regard. Another disadvantage to ionizers is that they contain a high voltage unit and are surrounded by an electric field which may cause discomfort to some persons. Short-term use of ionizers is considered acceptable by health professionals, but there are questions concerning long-term effects. Experiments show that long-term use of portable ionizers close to the body may cause discomfort to susceptible persons. The inventor has solved this problem by placing an

ionizer to the outside of the main apparatus *(fig. 1)* so that the electrical field has less exposure to the body compared with the portable ionizers mentioned above. Also, the inventor has designed additional equipment (optional) in the ionizer, inter alia a pot meter which allows the user to adjust the amount of ionization to fit individual need. In addition thereto, the inventor has an adjustable field regulator in his ionizer, thereby enabling an even greater adaptation to personal need. Also included is a lower belt attachment which stabilizes the ionizer, avoiding the pendulous movements of prior ionizers when walking and in motion.

In areas having variable and poor air quality, the air will normally consist of far more noxious gases and pollutants that can possibly be purified by a simple portable or stationary ionizer, because an ionizer has a limited range of operation. The inventor has for many years constructed and tested prototypes of portable air purifiers, and has come to the conclusion that ionizing alone is usually not sufficient. A more versatile air purification system is necessary to obtain satisfactory results. Obviously, there is a need to focus a multi-filtered stream of air directly to the breathing organs from a short distance, using a speed regulator. Experience shows that this gives the best health results, because the user of such a portable purifier generally gets the health advantages of improved air quality no matter where he is residing. Thus, there should be a clear demand for an apparatus which offers both versatility and adjustability to various user body shapes and health problems, i.e. an apparatus incorporating the possibility of individual adaptation to the particular user.

In order to solve the above problems for persons sensitive to air pollution, there is consequently an obvious need for such a portable apparatus offering a better and wider function than the simple principle of ionization alone.

According to the present invention there is provided a personal portable air purifying apparatus with a carrying arrangement, e.g. including a neck strap, for delivery of purified air to the users head/facial area, characterized in that it comprises a filter/fan unit, affixed to the chest of the user, said unit adapted to direct a concentrated stream of purified or conditioned air toward the user's mouth and nose.

AUSTRALIAN PATENT OFFICE 13

The apparatus in accordance with the invention is hereby described more closely by referring to exemplary embodiments thereof and with reference to the enclosed drawings wherein:

Fig. 1 shows a fan and filter unit, which constitute the central main part of the apparatus.

Fig. 2 shows the cooling and humidifying unit of the apparatus, which unit must be regarded as optional equipment that is used only under certain weather and temperature conditions.

Fig. 3 also shows additional equipment, i.e. an ionizer, which is only used under particular air conditions.

AUSTRALIAN PATENT OFFICE

Fig. 4 shows the lower belt, which is quite essential to keep the main apparatus (fig. 1) in a stable and secure position when the user is in motion.

Fig. 5 shows a so-called swan's neck or mouth piece which may be used advantageously in heavily polluted areas or when wind deflects the air stream from the main apparatus.

Fig. 6 shows an adjustable directing fin for the direction of air flow.

Fig. 7 shows a cooling and humidifying unit, lighter than the unit of *Fig. 2*, and more suitable for use when mobile.

Fig. 8 shows a smaller ionizer which is more suitable for ionization of air entering the filters.

Fig. 9 shows the most commonly used position of the main apparatus on the body.

Fig. 10 shows an embodiment of the apparatus with an electronic auto control unit on top of the apparatus for automatic focusing of air flow towards the respiratory organs of the user.

Fig. 11 shows an embodiment of the apparatus which provides the option of thicker filters for use in more polluted areas.

Fig. 12 shows the use of the apparatus in heavily polluted situations, where a mask is necessary to keep poisonous air away from the respiratory organs.

Fig. 13 shows the use of the air purifier in heavy air pollution where there is a danger of damage to eyesight.

Fig. 14 shows an embodiment of the apparatus having a propeller type fan.

Fig. 1 shows a unit consisting of a fan **(2)** and a filter unit **(8)**. The filter unit may comprise of an active carbon filter, a pre-filter **(65)** and a post-filter **(66)**. The fan sucks the air by the rear hatch way **(13)** and through the filters **(8,65,66)**. The air then passes through the fan **(2)** and is thereafter hurled toward the user's respiratory organs. Filters may easily be changed by opening the rear hatch way **(13)** by way of a simple rapid coupling system, e.g. a magnet attachment or a screw connection **(14A)**. A full disconnection of the rear hatch way **(13)** is simply done by additionally

bending outward the tongue like projections below the lower belt attachment **(22)**. Pulling out the filter unit **(8)** and the filter cassette **(67)**, makes the NiCd battery **(3)** and the fan **(2)** easily accessible. By loosening the fan center screw, the motor **(1)** is accessible for lubrication and maintenance. The battery may alternatively be reached by an exterior slide hatch as is the case in one of the inventor's prototypes. In another alternative, an exterior plug may be mounted for charging the battery, running the motor, cooling, electronics, etc. The wind direction fins **(10)** are quite necessary to catch and forward the rotating air from the centrifugal fan. The speed regulator **(4)** is quite necessary to obtain an air current of suitable speed from the apparatus. The lower belt attachment **(22)** has a small plug entering into the apparatus *(fig. 1)* and another plug protruding for attachment of the hoop or ring **(68)** on the lower belt *(fig. 4)*. Between the rings **(68)** there is an elastic middle strap **(69)** which makes the hoops clasp firmly on to the lower belt attachment **(22)**. This solution also makes it possible to use the lower belt invisibly, if the user accepts that the covering clothes enter between the belt attachment and the hoop **(68)**. By turning an adjustment screw **(14A)**, it is easy to adjust the apparatus so that the user receives an adequate flow of air directly toward the nose and mouth. The lengths of the lower belt *(fig. 4)* and the neck strap **(11)** are adjustable by means of a rear slide buckle, e.g. of the so-called Fastex type.

Most people have an indent in the middle of the chest due to the shape of the rib cage. The middle of the rear hatch **(13)** on the apparatus may have a convex shape corresponding to the indent of the rib cage. The lower belt *(fig. 4)* pulls the apparatus against the indent to stabilize it's position. This solution offers more room for the filter unit **(8)** as well as counteracting pendulous movements of the apparatus when in motion.

The cooler and humidifier units *(fig. 2 and fig. 7)* may have a grating and/or a pipe system for cooling and humidifying the air when it passes the air duct **(26)** on the top of the apparatus.
Filters arranged in series **(8)** may comprise both of active carbon filters, electrostatic filters, and other filter types which contribute to the removal of harmful gases and particles, thereby improving the air for respiration.

The electronic auto control unit **(50-58)** consists inter alia of:

An electromotor **(50)** to direct the air flow sideways when the user is turning his head to the side. An electromotor **(51)** to direct the air flow backward and forward.

Detectors **(52,53)**, control electronics **(55)**, a bevel wheel control **(57)**, side directional fin **(56)**, magnetic swift lock **(58)**.

THE CLAIMS OF THE INVENTION ARE AS FOLLOWS:

1. A personal portable air purifying apparatus with a carrying arrangement, e.g. including a neck strap, for delivery of purified air to the user's head/facial area, comprising a filter/fan unit for affixing to the chest of the user, said unit adapted to direct a concentrated stream of purified or conditioned air toward the user's mouth and nose and an air current steering device.

2. Apparatus according to claim 1, characterized in that said filter/fan unit may also be kept in a stable and secure position by a lower belt included in the carrying arrangement, or for instance by the use of straps or a tight fitting pocket or pouch in a suitable position.

3. Apparatus according to claim 1 or 2, characterized in that said filter/fan unit is equipped with a rapid fastening arrangement, for instance a Velcro attachment, for one or several further air influencing units to be included as optional parts of the apparatus.

4. Apparatus according to claim 3, characterized in that said further air influencing units comprise an ionizing unit, and air cooling/humidifying unit.

5. Apparatus according to claim 4 characterized in that said air current steering devices include an electronic control means, comprising detectors for head movement of the user and controllable devices in or by an air outlet orifice for changing air fanning direction.

6. Apparatus according to claim 4, characterized in that the air current steering devices include a manually adjustable contraption for channelling a flow of air towards the desired area, for instance a manually adjustable directing fin or swan's neck of a flexible type, both having a base attachable at the top of the apparatus by the use of a Velcro attachment, a magnet attachment, or other rapid fastening arrangements.

7. Apparatus according to claim 4, characterized in that the air current steering devices include a flexible and elastic air duct, attached by means of a quick fastening arrangement, for instance a Velcro

AUSTRALIAN PATENT OFFICE 23

attachment **(20)**, to the filter/fan unit *(fig. 1 and 60)*, and a mask which covers the nose and mouth *(fig. 12)*, optionally also the eyes *(fig. 13)*.

8. Apparatus according to one of the preceding claims,
c h a r a c t e r i z e d in that it includes a housing with an adjustable sloping rear hatch *(fig 1,13)*, adaptable to the users chest angle and posture, by e.g. an adjustment screw **(14A)**, notches or tooth edged adjustment pin **(14B)** arranged at the top or bottom of the apparatus for adjustment of the angle of the rear hatch.

9. Apparatus according to one of claims **4-8**,
c h a r a c t e r i z e d in that the ionizing unit *(fig. 3)* ionizes the departing air of the apparatus and is easily attachable as a front part of the apparatus by means of a Velcro attachment **(20)**, magnet attachment, or another rapid fastening arrangement, by which the ionizing unit *(fig. 3)* is placed as far away from the user's body as practically possible, optionally, by having a smaller ionizing unit *(fig. 8)* influencing the air and being correspondingly attachable as a top part of the apparatus, and that the ionizing units *(fig. 3 and fig. 8)* are adjustable **(17)** regarding the amount of ionization, and optionally, directional adjustment of outgoing ions **(18)**.

10. Apparatus according to one of claims **4-9**,
c h a r a c t e r i z e d in that the cooling/humidifying unit *(fig. 2 and fig. 7)* includes a thermoelectric cooling unit which can be fastened to the filter/fan unit by a Velcro attachment **(20)**, magnets or other quick fastening arrangement.

11. Apparatus according to one of claims **4-9**,
c h a r a c t e r i z e d in that the cooling/humidifying unit *(fig. 2 and fig. 7)* comprises a cooling means based on refrigerated material, for instance ice, dry ice or the like.

12. Apparatus according to claim **11**,
c h a r a c t e r i z e d in that the cooling/humidifying unit *(fig. 2)* consists of an outside insulated covering case **(61)**, the interior cooling sheath **(62)** of the covering case having a shape adapted to the exterior shape of the filter/fan unit or, optionally to the exterior shape of the filter/fan unit when said further air influencing unit is attached thereto.

13. Apparatus according to one of claims **4-12**,
c h a r a c t e r i z e d in that said filter/fan unit *(fig. 1)* includes a filter **(8)**, optionally consisting of several partial filters of various types arranged in series, close to an air inlet **(63)**, and a fan **(2)** which may be of a centrifugal or propeller type.

AUSTRALIAN PATENT OFFICE 13

14. A portable fan for directing a forced air stream toward a user's face, comprising:

(1) a fan unit having a motorized fan, said fan unit having means for positioning said fan unit on the chest of the user;

(2) an air inlet in said fan unit;

(3) an air outlet in said fan unit, wherein air flows into said air inlet and flows out through said air outlet by action of said motorized fan; and

(4) means connected to said fan unit and positioned entirely below the face of the user when said fan unit is positioned on the chest of the user for directing said forced air stream toward the user's face.

15. The fan of claim 14, wherein said air stream directing means comprises air directing fins.

16. The fan of claim 14, wherein said air stream directing means is said air flow outlet.

17. The fan of claim 14, wherein said air inlet comprises an opening in said fan unit.

18. The fan of claim 17, wherein said opening is a rear hatchway allowing access into said fan unit.

19. The fan of claim 18, wherein said rear hatchway is hingeably attached to said fan unit and further comprises means for changing the angle of said rear hatchway relative to said fan unit about said hingeable attachment.

20. The fan of claim 18, wherein said rear hatchway is hingeably attached to said fan unit and further comprises an adjustable screw for changing the angle of said rear hatchway relative to said fan unit about said hingeable attachment.

21. The fan of claim 18, wherein said rear hatchway is hingeably attached to said fan unit and further comprises a notch or tooth edged adjusting pin for changing the angle of said rear

AUSTRALIAN PATENT OFFICE 13

hatchway relative to said fan unit about said hingeable attachment.

22. The fan of claim 14, wherein said air stream directing means further comprises an electric motor controllably attached to said air stream directing means.

23. The fan of claim 22, further comprising a head movement detector controllably connected to said electric motor.

24. The fan of claim 18, wherein said rear hatchway has a convex shape.

25. The fan of claim 18, wherein said air inlet is through or around said rear hatchway.

26. The fan of claim 14, wherein said air stream directing means is removably connected to said fan unit.

27. The fan of claim 14, further comprising a filter positioned between said air inlet and said motorized fan for purifying air flowing into said fan unit through said air inlet.

28. The fan of claim 27, comprising a plurality of said filters.

29. The fan of claim 14, wherein said motorized fan is a centrifugal fan.

30. The fan of claim 14, wherein said fan is a propeller fan.

31. The fan of claim 14, further comprising an air ionizer in air flow communication with said air outlet.

32. The fan of claim 31, wherein said air ionizer is removably attached to said fan unit.

33. The fan of claim 30, wherein said air ionizer further comprises means for adjusting the

AUSTRALIAN PATENT OFFICE

quantity of ionization.

34. The fan of claim 30, wherein said air ionizer further comprises means for directionally adjusting ions produced by said air ionizer.

35. The fan of claim 14, further comprising an air cooling or humidifying unit for cooling air flowing out through said air outlet.

36. The fan of claim 35, wherein said cooling or humidifying unit is removably attached to said fan unit.

37. The fan of claim 35, wherein said cooling or humidifying unit is attached to said fan unit by VELCRO attachment or magnetic attachment.

38. The fan of claim 35, wherein said cooling or humidifying unit comprises means for holding a coolant.

39. The fan of claim 35, wherein said cooling or humidifying unit use an ice or dry ice cooling or humidifying unit.

40. The fan of claim 35, wherein said cooling or humidifying unit comprises an outer insulated covering case surrounding at least a portion of said fan unit and an inner cooling sheath between said outer insulated covering case and said fan unit, wherein said cooling sheath cools air within said fan unit.

41. A portable fan for directing a forced air stream towards a user's face, comprising:

(1) a fan unit having a motorized fan, said fan unit having means for positioning said fan unit on the chest of the user;

(2) an air inlet in said fan unit;

AUSTRALIAN PATENT OFFICE 13

(3) an air outlet in said fan unit, wherein air flows into said air inlet and flows out through said air outlet by action of said motorized fan; and

(4) a fan speed regulator for regulating the speed of said motorized fan, said fan speed regulator adjustable for a suitable speed of said forced air stream from said fan unit.

42. A portable fan for directing a forced air stream toward a user's face, comprising:

(1) a fan unit having a motorized fan, said fan unit having means for positioning said fan unit on the chest of the user, said fan unit directing a forced air stream toward a user's face from a position entirely below the face of the user;

(2) an air inlet in said fan unit;

(3) an air outlet in said fan unit, wherein air flows into said air inlet and flows out through said air outlet by action of said motorized fan, said outlet position entirely below the face of the user; and

(4) a fan speed regulator for regulating the speed of said motorized fan, said fan speed regulator adjustable for a suitable speed of said forced air stream from said fan unit.

43. The fan of claim 42, further comprising filters positioned between said air inlet and said motorized fan.

44. The fan of claim 42, further comprising accessory means for channelling said forced air stream from said air outlet to a position closer to the user's face allowing the user open breathing organs and free unobstructed head movements.

Dated this 17th day of February 1997.

IVER HANSEN

By its Patent Attorneys

DAVIES COLLISON CAVE

AUSTRALIAN PATENT OFFICE

+3602 |93

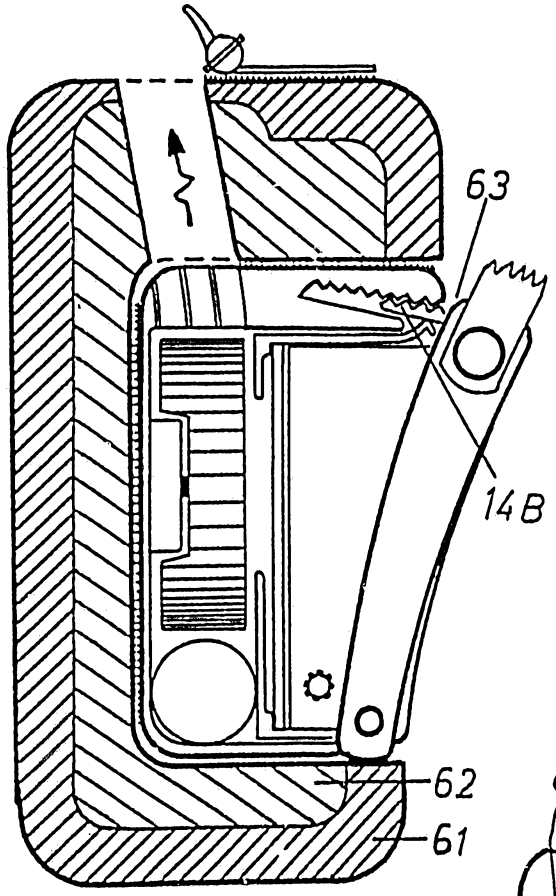

FIG.2

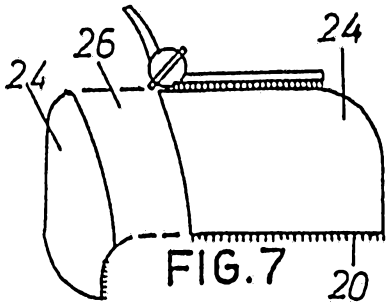

FIG.7

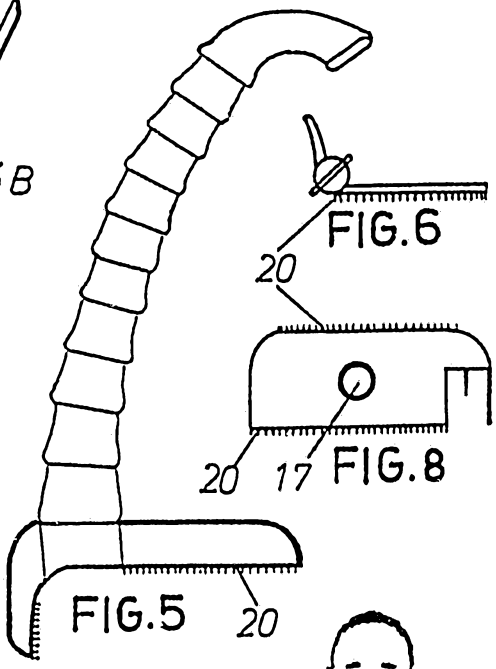

FIG.6 FIG.8

FIG.5

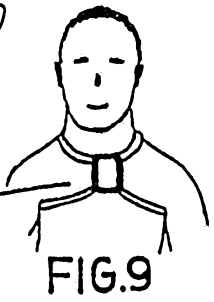

FIG.9

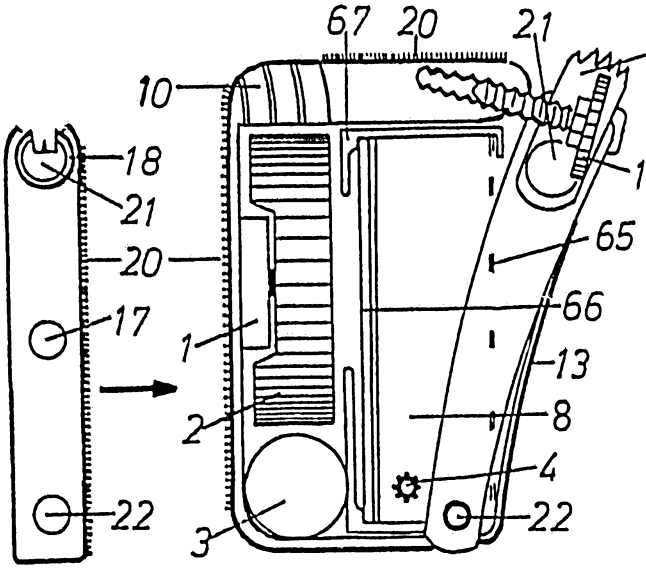

FIG.3 FIG.1

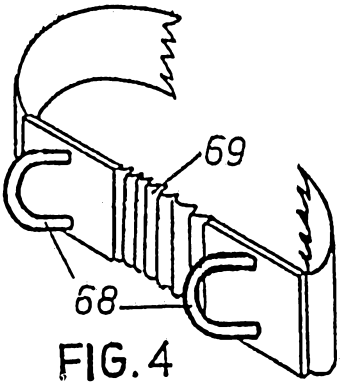

FIG.4

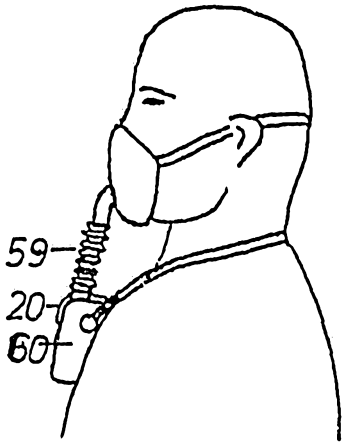

FIG.12

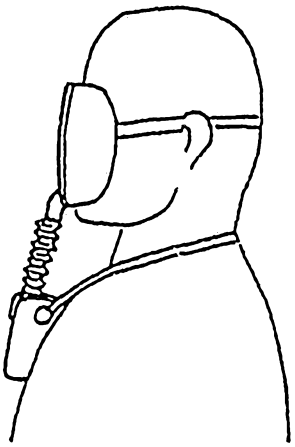

FIG.13

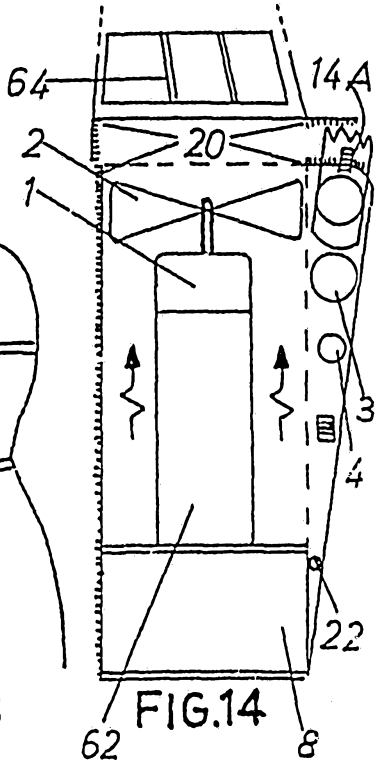

FIG.14

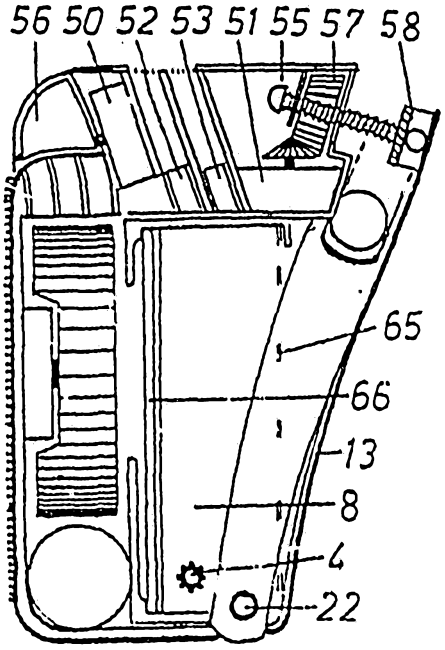

FIG. 10

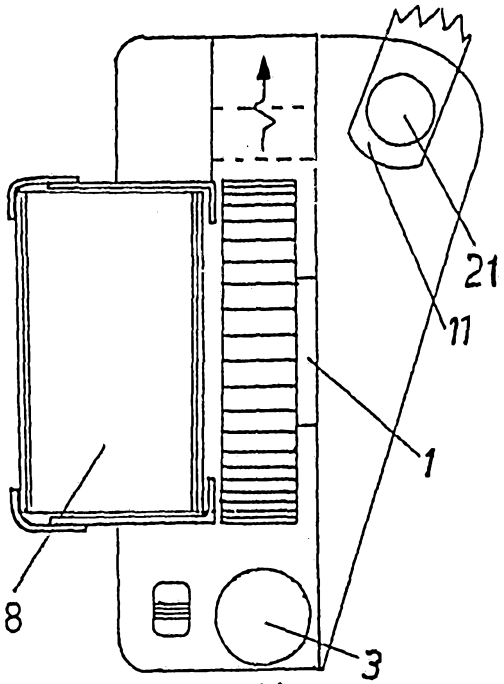

FIG.11

INTERNATIONAL SEARCH REPORT

International application No.
PCT/NO 93/00088

A. CLASSIFICATION OF SUBJECT MATTER

IPC5: A61M 15/02, A62B 7/00, F24F 3/16
According to International Patent Classification (IPC) or to both national classification and IPC

B. FIELDS SEARCHED

Minimum documentation searched (classification system followed by classification symbols)

IPC5: A61M, A62B, F24F

Documentation searched other than minimum documentation to the extent that such documents are included in the fields searched

SE,DK,FI,NO classes as above

Electronic data base consulted during the international search (name of data base and, where practicable, search terms used)

C. DOCUMENTS CONSIDERED TO BE RELEVANT

Category*	Citation of document, with indication, where appropriate, of the relevant passages	Relevant to claim No.
A	WO, A1, 9216251 (ULBERT, KAREL), 1 October 1992 (01.10.92), figure 1, abstract --	1
A	US, A, 5002049 (KNOLL), 26 March 1991 (26.03.91), figure 1, abstract --	1
A	US, A, 3140590 (F.M. GLEOCKLER), 14 July 1964 (14.07.64), figure 1 --	1,9

[X] Further documents are listed in the continuation of Box C. [X] See patent family annex.

* Special categories of cited documents:
"A" document defining the general state of the art which is not considered to be of particular relevance
"E" erlier document but published on or after the international filing date
"L" document which may throw doubts on priority claim(s) or which is cited to establish the publication date of another citation or other special reason (as specified)
"O" document referring to an oral disclosure, use, exhibition or other means
"P" document published prior to the international filing date but later than the priority date claimed
"T" later document published after the international filing date or priority date and not in conflict with the application but cited to understand the principle or theory underlying the invention
"X" document of particular relevance: the claimed invention cannot be considered novel or cannot be considered to involve an inventive step when the document is taken alone
"Y" document of particular relevance: the claimed invention cannot be considered to involve an inventive step when the document is combined with one or more other such documents, such combination being obvious to a person skilled in the art
"&" document member of the same patent family

Date of the actual completion of the international search	Date of mailing of the international search report
2 Sept 1993	06 -09- 1993
Name and mailing address of the ISA/ Swedish Patent Office Box 5055, S-102 42 STOCKHOLM Facsimile No. +46 8 666 02 86	Authorized officer C. Westberg Telephone No. +46 8 782 25 00

INTERNATIONAL SEARCH REPORT

International application No.
PCT/NO 93/00088

C (Continuation). DOCUMENTS CONSIDERED TO BE RELEVANT

Category*	Citation of document, with indication, where appropriate, of the relevant passages	Relevant to claim No.
A	Derwent's abstract, No 92-241232/29, week 9229, ABSTRACT OF SU, A, 1676631 (MOSC AUOTRACTOR ELEC EQUIP WKS), 15 Sept 1991 (15.09.91)	1,9

--

INTERNATIONAL SEARCH REPORT

Information on patent family members

30/07/93

International application No.
PCT/NO 93/00088

Patent document cited in search report	Publication date	Patent family member(s)	Publication date
WO-A1- 9216251	01/10/92	NONE	
US-A- 5002049	26/03/91	EP-A,B- 0336518	11/10/89
US-A- 3140590	14/07/64	NONE	