J. W. JORDAN, JR.

DRAWER LOCK.

APPLICATION FILED MAY 7, 1913.

1,092,651. Patented Apr. 7, 1914.

Fig. 1.

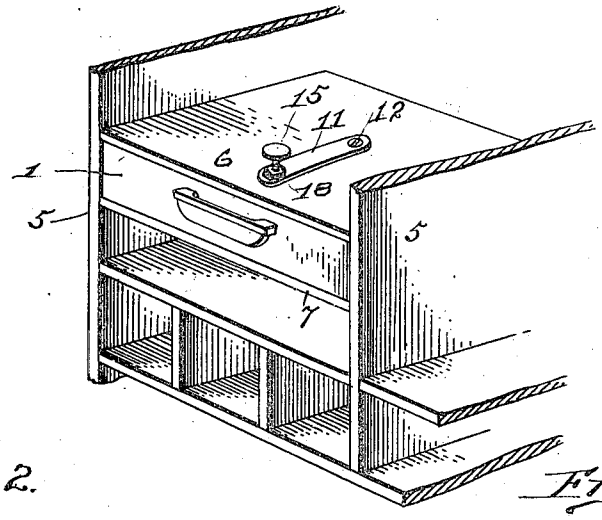

Fig. 2.

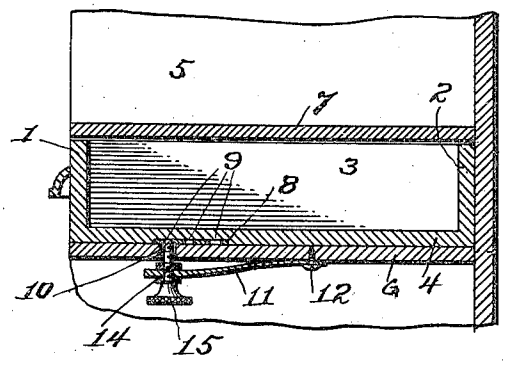

Fig. 3.

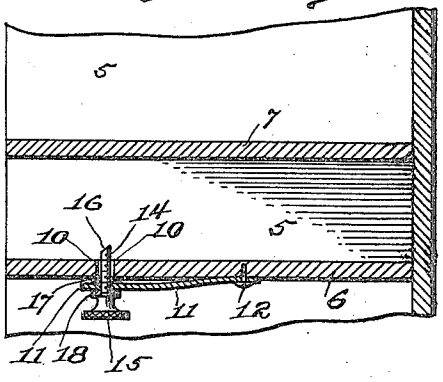

Fig. 4.

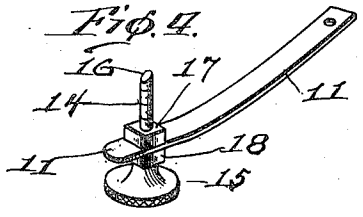

Fig. 5.

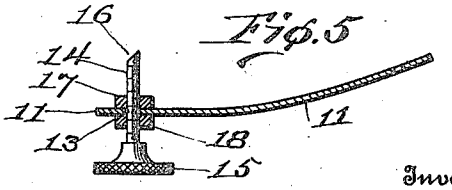

Witnesses

J. M. Fowler Jr.

C. T. Belt

Inventor

Jason W. Jordan, Jr.

By W. H. Wills

Attorney.

UNITED STATES PATENT OFFICE.

JASON W. JORDAN, JR., OF LEXINGTON, MISSISSIPPI.

DRAWER-LOCK.

1,092,651. Specification of Letters Patent. Patented Apr. 7, 1914.

Application filed May 7, 1913. Serial No. 766,113.

To all whom it may concern:

Be it known that I, JASON W. JORDAN, JR., a citizen of the United States, residing at Lexington, in the county of Holmes and State of Mississippi, have invented certain new and useful Improvements in Drawer-Locks, of which the following is a specification.

This invention relates to the class of locks and latches, and pertains especially to a spring controlled pin-lock for drawers and the like.

The object of the invention is to provide a locking device for drawers of various character, which shall be capable of making a secret lock with a drawer by the movement of the drawer, and which shall hold the drawer locked in open position as well as in closed position.

A further object of the invention is to provide a spring controlled drawer lock of such novel and peculiar construction and arrangement of parts as to be operated by the drawer during the inward movement of the drawer for locking the drawer, and as to be operated from without the drawer casing for unlocking the drawer. Such lock is adapted to hold the drawer open in various positions.

With these and various other objects, advantages and improved results in view, the invention consists in the special construction and arrangement of parts, as will be hereinafter fully described and set forth in the appended claim.

In the accompanying drawings forming part of this application:—Figure 1 is an inverted perspective view of a drawer casing exemplifying this invention. Fig. 2 is an enlarged sectional view of a drawer in locked position. Fg. 3 is a similar view of the drawer casing with the drawer removed. Fig. 4 is a detail perspective view of the locking device. Fig. 5 is an enlarged vertical sectional view of the locking device.

The same reference characters denote the same parts throughout the several views of the drawings.

For the purpose of exemplifying the application of the locking device, I have selected a drawer such as may be found associated with the pigeon holes of a roll-top desk, but the lock is quite as applicable to various other drawers, such as are found in dental cabinets, file cases and the like. The drawer shown in the drawings comprises a front 1, back 2, sides 3, and bottom 4. Such drawer fits a casing formed by sides 5, a bottom 6, and top 7. The outer face of the bottom 4 of the drawer is provided with a metal plate 8, having a plurality of catch-holes 9 therein, the function of which will be hereinafter explained. The bottom 6 of the casing has an aperture 10, over which the plate 8 slides in the sliding movement of the drawer so that the holes 9 may successively register with the aperture 10.

The locking device is suspended from the outer face of the bottom 4 of the casing by means of a plate spring 11 having one end secured to said face at 12, and having an aperture 13 in the free end thereof. The locking device comprises a screwthreaded pin 14, having a milled head 15, and terminating in a beveled end 16, and nuts 17 and 18 for clamping the free end of the spring 11 on the pin, and by means of which the pin may be adjusted. The beveled portion of the pin projects through the casing aperture 10 so as to stand in the path of the movement of the drawer-plate holes 9, and under pressure of the spring the pin end is forced into one or another of the holes 9. When it is desired to unlock the drawer, the pin is pulled sufficiently to disengage the beveled end of the pin with the catch-holes, and the pin is held in depressed position during withdrawal or outward movement of the drawer until the plate 8 clears the pin, whereupon the pin may be released. It will be seen that the pin is depressed during the inward movement of the drawer by the bottom of the drawer pressing against the beveled end of the pin so as to permit the drawer to be closed and automatically locked.

In order to vary the extent of the projecting portion of the pin through the bottom of the drawer casing as desired or as occasion may demand, the lock nuts 17 and 18 are operated so as to clamp the spring to the pin according to the length of projection required.

It is obvious that the lock may be applied to one side or the other of a drawer casing with the same results as hereinbefore stated, that the lock may be duplicated or multiplied according to the size of the drawers to which the lock may be applied, and that while I have shown and described the lock

applied to a desk drawer, I do not restrict or confine myself in the application of the lock.

Having thus described my invention what I claim as new and desire to secure by Letters Patent is:

In a drawer operated lock, the combination with a drawer, a drawer plate having catch-holes, and a drawer casing having an aperture therein, of a plate spring attached to the under outer sides of the casing and having a free end operated by the sliding movement of the drawer, an adjustable screw pin suspended by the free end of the spring and coöperating with the holes and the aperture, and means for adjustably clamping the spring to the pin.

In witness whereof I hereunto set my hand in the presence of two witnesses.

JASON W. JORDAN, JR.

Witnesses:
J. W. JORDAN, Sr.,
O. F. HOSEA.