March 25, 1924. 1,488,171

A. C. SAVIDGE

VACUUM PUMP

Filed Aug. 1, 1918

Fig. 1.

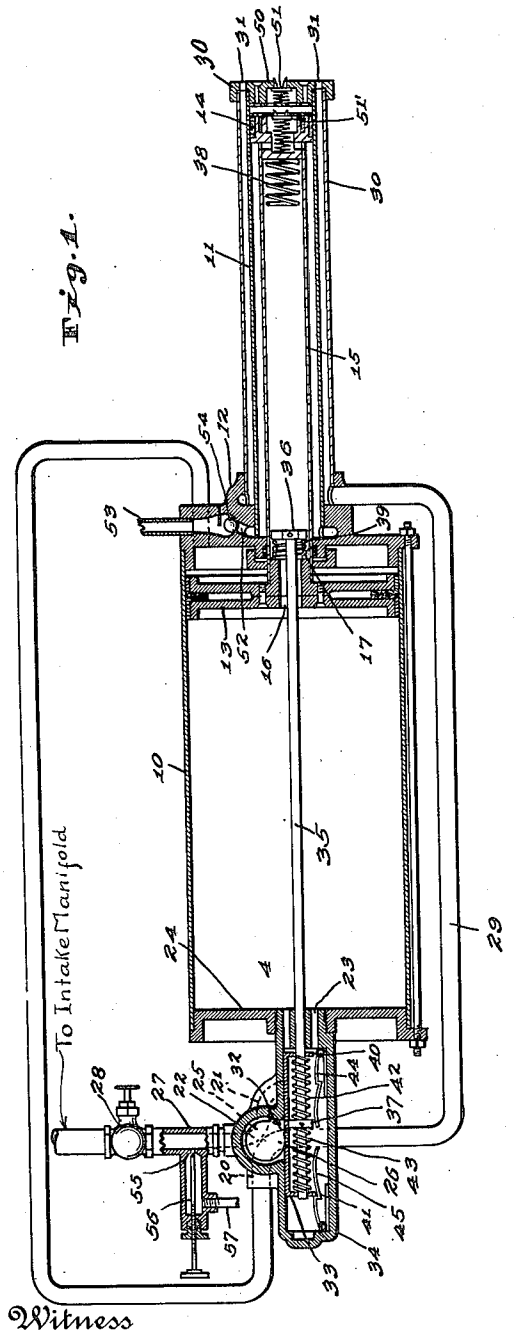

Fig. 4.

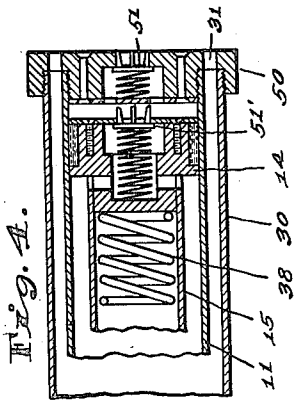

Fig. 3.

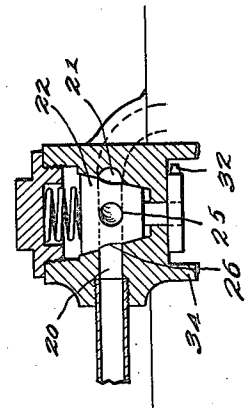

Fig. 2.

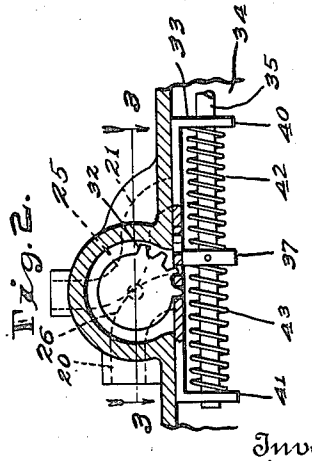

Witness
Frank A. Fahle

By

Inventor
Albert C. Savidge,

Hood & Schley
Attorneys

Patented Mar. 25, 1924. 1,488,171

UNITED STATES PATENT OFFICE.

ALBERT C. SAVIDGE, OF INDIANAPOLIS, INDIANA.

VACUUM PUMP.

Application filed August 1, 1918. Serial No. 247,768.

To all whom it may concern:

Be it known that I, ALBERT C. SAVIDGE, a citizen of the United States, residing at Indianapolis, in the county of Marion and State of Indiana, have invented a new and useful Vacuum Pump, of which the following is a specification.

It is the object of my invention to produce an air pump which is operated by suction, as of an automobile engine for filling the tires; which uses the cooling action of the air being rarefied in the suction to absorb heat from the air being compressed in the pump; which when in operation, and in consequence when a greater quantity of air is supplied to the intake manifold of the associated internal combustion engine, also supplies additional fuel to maintain the proper mixture proportions in such intake manifold; and which is incapable of being stalled on dead center.

The accompanying drawing illustrates my invention: Fig. 1 is a central longitudinal section through a vacuum pump embodying my invention, showing many of the parts rather diagrammatically; Fig. 2 is an enlarged detail of the reversing valve; Fig. 3 is a section on the line 3—3 of Fig. 2; and Fig. 4 is an enlarged detail of the parts at the intake end of the pump cylinder.

My vacuum pump comprises a motor cylinder 10 and a co-axial pump cylinder 11, which at their adjacent ends are mounted in a common cylinder head 12. Two pistons 13 and 14 reciprocate within these two cylinders 10 and 11 respectively, and are connected by a tubular piston rod 15 the space within which is in communication by a central hole 16 through the piston 13 with the portion of space in the cylinder 10 on the opposite side of the piston 13 from that from which the piston rod 15 extends. The piston rod 15 works through a suitable packing 17 in the cylinder head 12, to separate the spaces within the two cylinders 10 and 11.

The two ends of the motor cylinder 10 communicate with two opposite ports 20 and 21 of a reversing valve 22, the communication of the left-hand end of such cylinder 10 with the port 21 being by a passage which includes a central opening 23 through the cylinder head 24 at the opposite end of the cylinder 10 from the head 12. The reversing valve 22 has two other ports 25 and 26, which communicate respectively with a pipe 27 leading through a cut-off valve 28 to the intake manifold of the associated internal combustion engine and with a pipe 29 leading by way of a tube 30 surrounding and spaced from the pump cylinder 11 to atmosphere openings 31. The valve 22 may be oscillated through an angle of 90°, to connect the ports 20 and 21 to the ports 26 and 25 respectively when the valve is in the position shown and to the ports 25 and 26 respectively when it is in the other position (90° in the clockwise direction from the position shown). The stem of the valve 22 carries a gear segment 32 the teeth of which mesh with holes in a slide 33 mounted in a closed slide-box 34 mounted in the cylinder head 24, the interior of which slide-box is in communication with the port 21 and through the opening 23 with the left-hand end of the motor cylinder 10, so as to eliminate the necessity for packing at this point. A valve rod 35 extends through the openings 16 and 23, and is provided within the tubular piston rod 15 with a collar 36 and within the slide-box 34 with a collar 37. The collar 36 co-operates with two buffer springs 38 and 39 mounted in opposite ends of the tubular piston rod 15, which buffer springs strike the collar 36 as the pistons 13 and 14 near their right-hand and their left-hand limits of movements respectively and carry the valve rod 35 to the right or to the left respectively, the valve rod 35 remaining stationary during all the piston movement save the last portion in each direction. The collar 37 lies between two fingers 40 and 41 on the slide 33; and two compression springs 42 and 43 are located between such collar 37 and said two fingers respectively, so that the rod 35 moves the slide 33 through such springs. Two stop-springs 44 and 45 co-operate with the fingers 40 and 41 respectively to hold the slide 33 in its respective extreme positions; and when the valve rod 35 and collar 37 are moved to compress one of the springs 42 or 43 such collar engages the then working stop-spring 44 or 45 when such spring 42 or 43 is under sufficient compression, and releases such stop-spring so as to allow the compressed spring 42 or 43 to move the reversing valve 22 to its other position with a snap action. In this way, stoppage of the pump on dead center is avoided.

The cylinder head 50 at the other end of the pump cylinder 11 from the head 12 is provided with air-admission valve 51 which opens to admit air into the cylinder 11 on

the right-hand side of the piston 14 as such piston moves to the left. The piston 14 is provided with a similar valve 51′ which opens to allow air to pass from the right-hand side of the piston 14 to the left-hand side thereof when the piston moves to the right. In the cylinder head 12 there is an outlet passage 52 which communicates with a pipe 53 which may be connected to the tire or tank or other device into which air is to be pumped, and in this outlet passage 52 is a valve 54 which opens to allow air to pass from the cylinder 11 to the pipe 53 as the piston 14 is moved to the left.

Opening into the pipe 27 between the valve 28 and the port 25 is a fuel nozzle 55, which may be adjusted in size by a suitable needle valve 56 and which is connected to any suitable source of fuel supply, as by a pipe 57. By this arrangement enough additional fuel is supplied when the pump is in operation to maintain the proper proportions of the mixture in the intake manifold in the associated engine, for as air is drawn through the pipe 27 by the engine suction, fuel is also drawn from the nozzle 25 into such air.

In operation, when air is needed for any purpose, as to fill a tire, the associated engine is operated and the valve 28 is opened. Air enters through the openings 31 and passes through the tube 30 around the pump cylinder 11, absorbing heat from such pump cylinder; this air passes by the pipe 29 to the reversing valve 22, and then into the motor cylinder 10 at the end determined by the then position of the reversing valve 22; the pressure of the air moves the piston 13, which carries with it the tubular piston rod 15 and pump piston 14; as the piston 13 moves it forces the air ahead of it out of the cylinder 10 through the reversing valve 22 and into the pipe 27; at the end of the stroke of the pistons 13 and 14 the buffer spring 38 or 39 strikes the collar 36 and moves such collar and the valve rod 35 in the same direction as the pistons are moving, compressing the spring 42 or 43 and upon sufficient compression of such spring releasing the stop-spring 44 or 45 to allow the compressed spring 42 or 43 to move the slide 33 and throw the reversing valve 22 to its other position; this reverses the direction of movement of the pistons 13 and 14, in the usual manner of reversing fluid-pressure motors, whereupon the action is repeated with the pistons moving in the other direction, continuing first in one direction and then in the other as long as the valve 28 remains open and the engine remains in operation. The piston 14 on its stroke to the left draws air into the cylinder 11 through the valve 51 and forces air from such cylinder past the valve 54 into the pipe 53 and the tire or other device being filled; while on its stroke to the right it forces through the valve 51′ the air which was drawn into the cylinder 11 on the preceding stroke to the left. The heat from the compression of the air within the cylinder 11 is in large part absorbed by the cooler partly rarefied air surrounding it (within the tube 30) and surrounded by it (within the tubular piston rod 15), which prevents the heating of the compressed air and the destruction which results from such heating in ordinary tire pumps. The air which is drawn through the pipe 27 into the intake manifold of the associated engine carries with it sufficient fuel from the nozzle 25 to maintain the desired proportions of the explosive mixture in such intake manifold.

I claim as my invention:

1. A vacuum tire pump, comprising a reciprocating fluid-pressure motor having its intake connected to atmosphere and its exhaust adapted for connection to the intake manifold of an internal combustion engine, and a reciprocating air pump connected to said fluid-pressure motor so as to be operated thereby.

2. A vacuum tire pump, comprising a fluid-pressure motor having its intake connected to atmosphere and its exhaust adapted for connection to the intake manifold of an internal combustion engine, and a fuel nozzle discharging into the discharge connection from said fluid-pressure motor between such motor and such intake manifold.

3. A vacuum tire pump, comprising a fluid-pressure motor having its intake connected to atmosphere and its exhaust adapted for connection to the intake manifold of an internal combustion engine, and an air pump connected to said fluid-pressure motor so as to be operated thereby.

4. A vacuum tire pump, comprising a fluid-pressure motor having its intake connected to atmosphere and its exhaust adapted for connection to the intake manifold of an internal combustion engine, and an air pump connected to said fluid-pressure motor so as to be operated thereby, said air pump being arranged in heat-transferring juxtaposition to a passageway for the air which passes through said fluid-pressure motor.

5. A vacuum tire pump, comprising a reciprocating fluid-pressure motor having its intake connected to atmosphere and its exhaust adapted for connection to the intake manifold of an internal combustion engine, a reciprocating air pump connected to said fluid-pressure motor so as to be operated thereby, and a tube surrounding said air pump and forming part of the passageway for the air which passes through said fluid-pressure motor.

6. A vacuum tire pump, comprising a reciprocating fluid-pressure motor having its

intake connected to atmosphere and its exhaust adapted for connection to the intake manifold of an internal combustion engine, a reciprocating air pump connected to said fluid-pressure motor so as to be operated thereby, and a tube surrounding said air pump, said tube being connected so that the air which enters the fluid-pressure motor passes through such tube before it reaches said motor.

7. A vacuum tire pump, comprising a reciprocating fluid-pressure motor having its intake connected to atmosphere and its exhaust adapted for connection to the intake manifold of an internal combustion engine, a reciprocating air pump connected to said fluid-pressure motor so as to be operated thereby, and a tubular piston rod connecting the reciprocating members of said motor and pump, the space within said tubular spacing rod communicating with the interior of said fluid-pressure motor so that the air within it is rarefied to absorb heat from the compressed air in said pump.

8. A vacuum tire pump, comprising a reciprocating fluid-pressure motor having its intake connected to atmosphere and its exhaust adapted for connection to the intake manifold of an internal combustion engine, a reciprocating air pump connected to said fluid-pressure motor so as to be operated thereby, a tubular piston rod connecting the reciprocating members of said motor and pump, the space within said tubular spacing rod communicating with the interior of said fluid-pressure motor so that the air within it is rarefied to absorb heat from the compressed air in said pump, and a tube surrounding said air pump and forming part of the passageway for the air which passes through said fluid-pressure motor.

9. A vacuum tire pump, comprising a reciprocating fluid-pressure motor having its intake connected to atmosphere and its exhaust adapted for connection to the intake manifold of an internal combustion engine, and a reciprocating air pump connected to said fluid-pressure motor so as to be operated thereby, a reversing valve for reversing the connections of the two ends of said fluid-pressure motor, and means for operating said reversing valve with a snap action at the end of the stroke of said motor.

10. A vacuum tire pump, comprising a reciprocating fluid-pressure motor having its intake connected to atmosphere and its exhaust adapted for connection to the intake manifold of an internal combustion engine, a reciprocating air pump connected to said fluid-pressure motor so as to be operated thereby, a reversing valve for reversing the connections of the two ends of said fluid-pressure motor, a latch for holding said reversing valve from movement, a spring which when put under pressure tends to move said valve from one position to another, and means operated at the ends of the stroke of said fluid pressure motor for first putting said spring under pressure and then releasing said latch.

In witness whereof, I have hereunto set my hand at Indianapolis, Indiana, this 27th day of July, A. D. one thousand nine hundred and eighteen.

ALBERT C. SAVIDGE.