May 2, 1950 C. J. YARRICK 2,506,187

CIRCUIT BREAKER SHOCK OPERATED LOCK OPEN DEVICE

Filed March 23, 1946 5 Sheets-Sheet 1

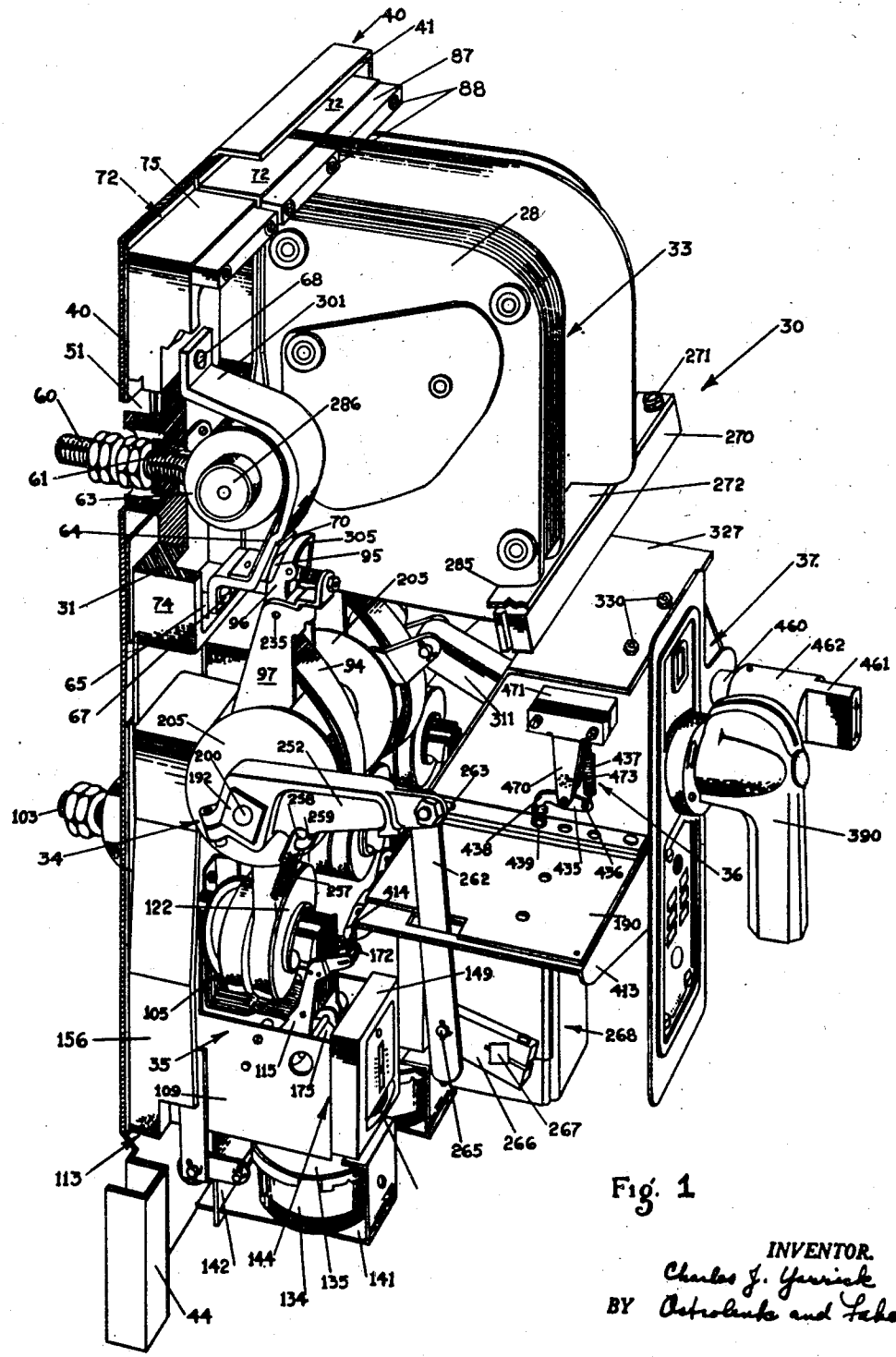

Fig. 1

INVENTOR.
Charles J. Yarrick
BY Ostrolenk and Faber

ATTORNEYS

May 2, 1950 C. J. YARRICK 2,506,187

CIRCUIT BREAKER SHOCK OPERATED LOCK OPEN DEVICE

Filed March 23, 1946 5 Sheets-Sheet 2

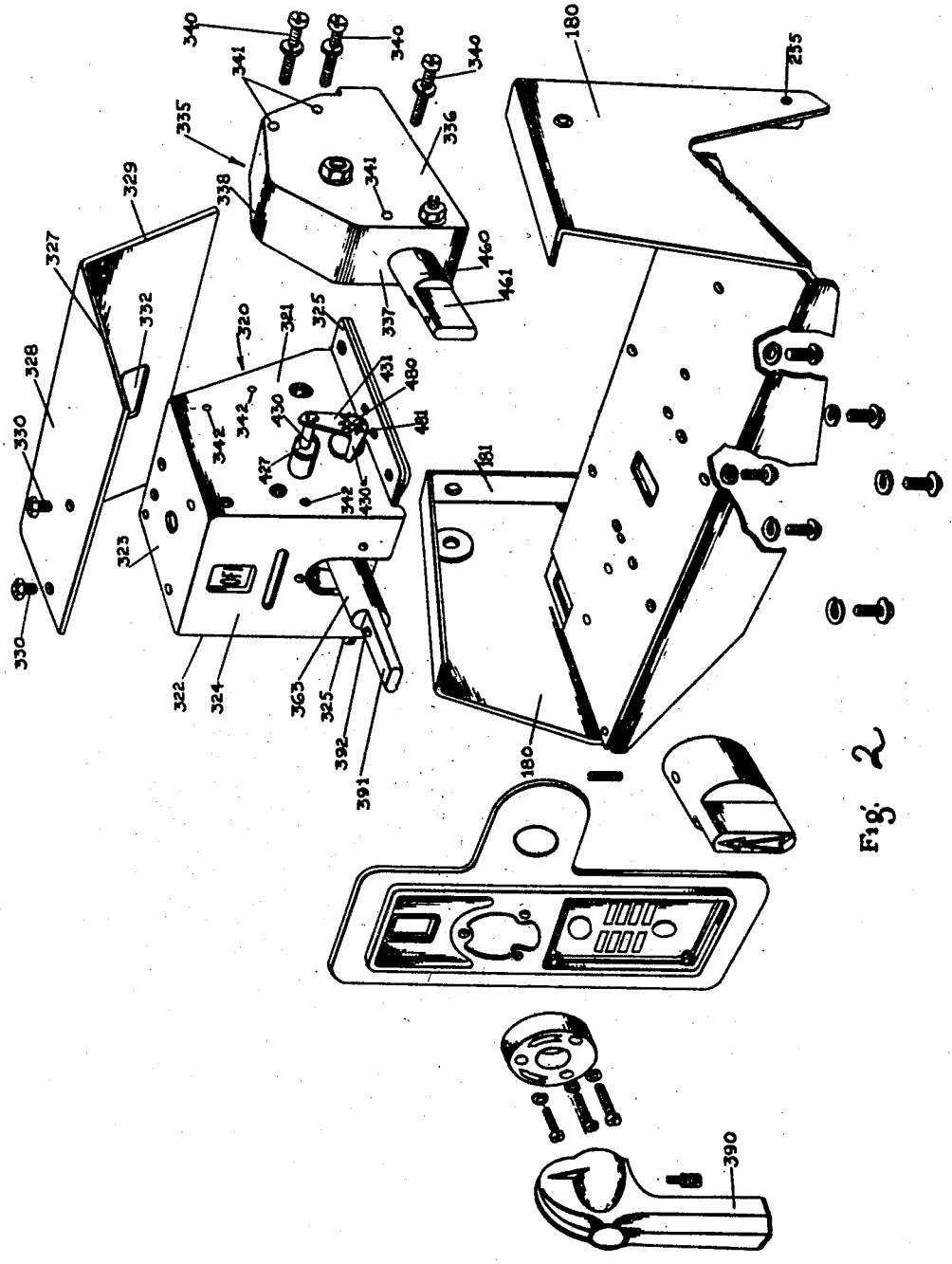

Fig. 2

INVENTOR.

BY Charles J. Yarrick
Osterlank and Faber

ATTORNEYS

May 2, 1950 C. J. YARRICK 2,506,187

CIRCUIT BREAKER SHOCK OPERATED LOCK OPEN DEVICE

Filed March 23, 1946 5 Sheets-Sheet 3

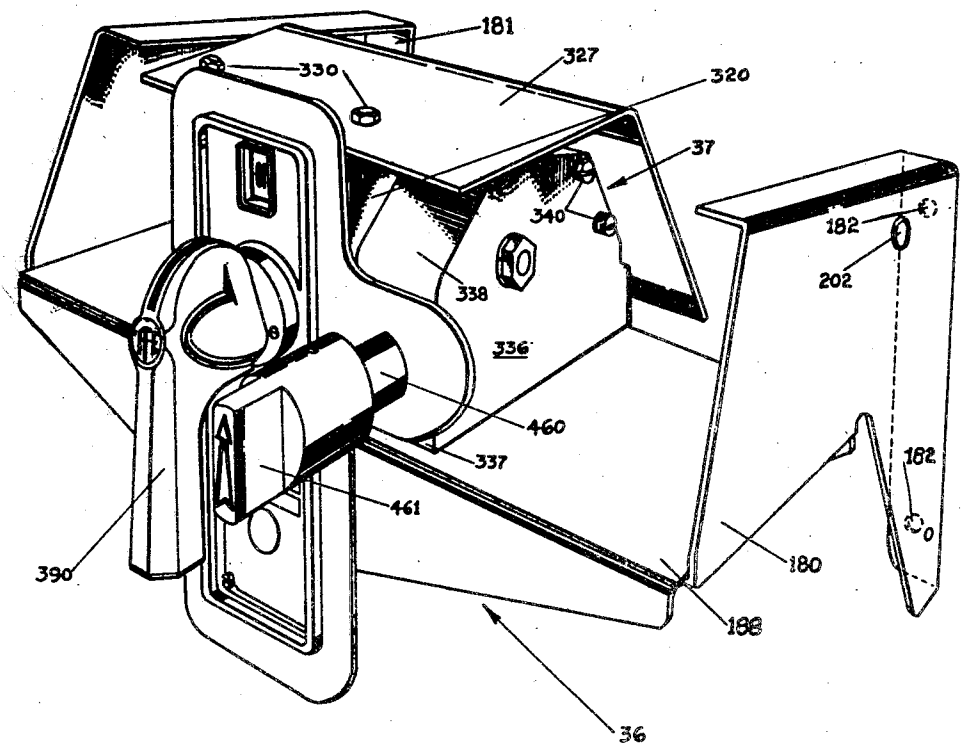

Fig. 3

INVENTOR.
Charles J. Yarrick
BY Ostrolenk and Faber
ATTORNEYS

May 2, 1950 C. J. YARRICK 2,506,187

CIRCUIT BREAKER SHOCK OPERATED LOCK OPEN DEVICE

Filed March 23, 1946 5 Sheets-Sheet 4

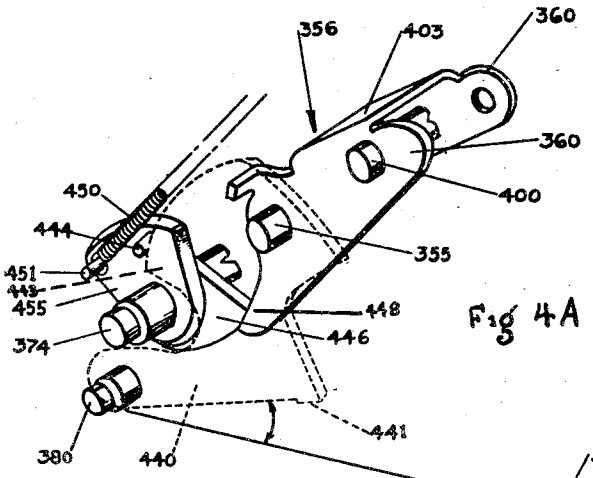

Fig 4A

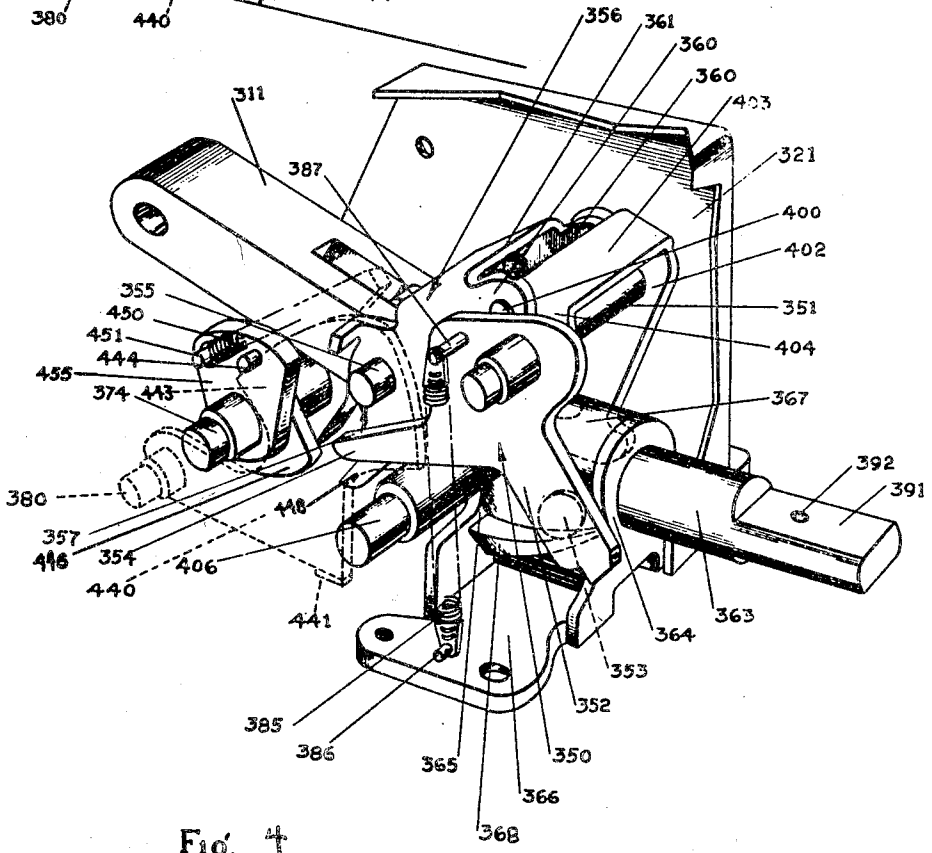

Fig. 4

INVENTOR.
Charles J. Yarrick
BY Detrolenk and Faber

ATTORNEYS

May 2, 1950 C. J. YARRICK 2,506,187

CIRCUIT BREAKER SHOCK OPERATED LOCK OPEN DEVICE

Filed March 23, 1946 5 Sheets-Sheet 5

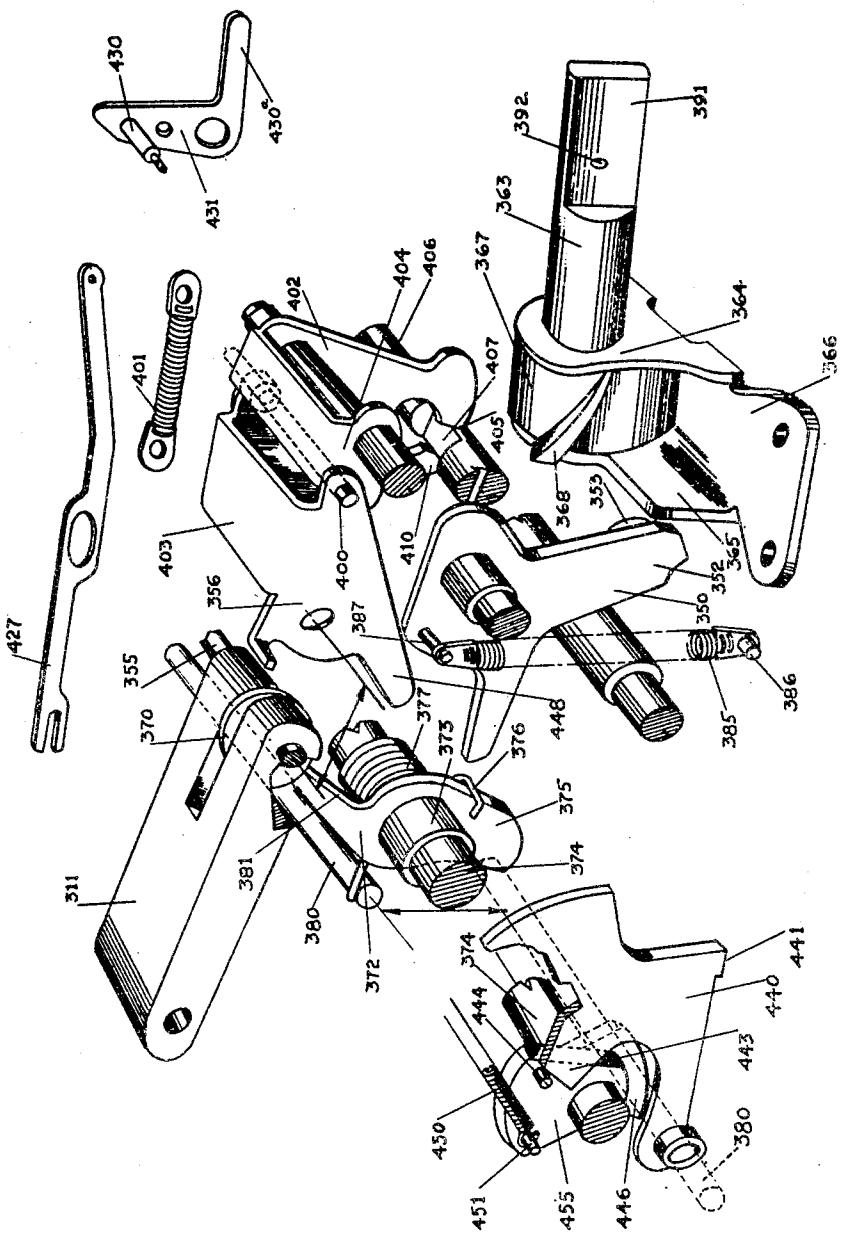

Fig. 5

INVENTOR.

BY Charles J. Yarrick
Ostrolenk and Faber

ATTORNEYS

Patented May 2, 1950

2,506,187

UNITED STATES PATENT OFFICE

2,506,187

CIRCUIT BREAKER SHOCK OPERATED LOCK OPEN DEVICE

Charles J. Yarrick, West Collingswood, N. J., assignor to I-T-E Circuit Breaker Company, Philadelphia, Pa., a corporation of Pennsylvania

Application March 23, 1946, Serial No. 656,563

9 Claims. (Cl. 200—106)

1

My present invention relates to switch gear, and more particularly to circuit breaker arranged to be constructed for simplified manufacture and assembly from a plurality of unit assemblies.

The primary object of my present invention is the construction of a circuit breaker so that it will not function erroneously under impact or other physical shock.

Another object of my invention is the construction of circuit breaker operating elements in such manner that no physical shock can result in the accidental closing of the circuit breaker while, nevertheless, the circuit breaker may readily be closed in the proper manner.

Specifically, my invention contemplates a balanced weight actuated by an unbalanced weight subject to physical shock and because of these conditions responds faster to shock than the other parts of the operating mechanism to block closing movement of the operating mechanism on such physical shock.

The foregoing and many other objects of the present invention will become clear from the following description and the accompanying drawings, in which:

Figure 1 is a view in perspective with parts of the circuit breaker removed, showing the novel circuit breaker of the present invention.

Figure 2 is an expanded view showing the steel shelf which supports the operating mechanism, showing, however, the front of the steel shelf and the manner in which the operating mechanism, in its unit assembly, is mounted thereon.

Figure 3 is a view in perspective of the front of the steel support shelf of the circuit breaker, showing the operating mechanism secured thereon.

Figure 4 is a view in perspective of the operating mechanism for the circuit breaker with the housing thereof broken away to reveal the elements thereof, especially the means for preventing accidental closing of the circuit breaker on physical shock.

Figure 4A is a detail view showing the operation of my novel means for preventing accidental closing of the circuit breaker.

Figure 5 is an expanded view of the elements and linkages of the operating mechanism of Figure 4.

Referring now to Figure 1, the circuit breaker 30 is composed of a plurality of unit assemblies which comprise (1) a stationary contact blowout and arc horn assembly 31; (2) an arc chute assembly 33; (3) movable contact assembly 34; (4) the over-current trip unit assembly 35; (5) the

2

operating mechanism assembly 36; (6) the hold-in and shock-absorbing assembly 37; and (7) the control switch assembly 258. The circuit breaker is a three-pole circuit breaker in which three stationary contact assemblies 31 and three arc chute assemblies 33 are provided. The movable contact assembly 34 is provided with three movable contact members as hereinafter described. An over-current trip unit assembly 35 is provided for each of the poles of the circuit breaker, the units operating a common trip bar for the operating means, as hereinafter described. A single operating assembly 36 is, however, provided, connected to the center pole of the movable contact assembly 34. Since the movable contact assemblies are mounted on a single shaft, operation of the center pole will result in a simultaneous operation for the other poles. Likewise, since a single operating assembly 36 is required, only a single hold-in shock-absorbing means 37 is required.

The steel support panel, the stationary contact and upper terminal assembly and the insulating support therefor, the trip unit and lower terminal assembly and the insulating support therefor, the bracket and shelf supports for the unit assemblies, the simplified construction of the circuit breaker here shown, the movable contact assembly and the arc chute assembly are all more specifically described in application Serial No. 586,574, now Patent Number 2,472,961, June 14, 1949, of William M. Scott, Jr., filed April 4, 1945, assigned to the assignee of the present invention.

The operating mechanism 36 is enclosed in a housing 320 (Figures 1, 2 and 3) having a pair of side walls 321, 322, a top wall 323, and a front wall 324. Side walls 321, 322 have horizontal flanges 325, 325, which rest on the shelf 188 and which are secured thereto by suitable bolts passing through aligned openings in the flanges 325 and the shelf 188. The entire operating mechanism is enclosed in the housing 320 to form an operating assembly 36 which, as may be readily seen from Figures 2 and 3, may be mounted as a single unit assembly on the circuit breaker.

An insulating cover member 327 of impregnated fibrous material having a top section 328 and an oblique section 329 is secured to the top wall 323 of the housing 320 by bolts 330 passing through aligned openings therein. The oblique section 329 registers with the back ends of the side walls 321, 322, and covers the back of the housing 320. Section 328 of the insulating cover sheet 327 is provided with an opening 332 through which the link 311 of the operating mechanism passes to en-

gage the crank 310 of the movable contact assembly 34.

The operating mechanism as shown in Figures 4 and 5 comprises an operating link 350 rotatably mounted on the cross-pin 351 carried by the side walls 321, 322. Operating link 350 has a front extension 352 carrying the roller 353 and a back extension 354 which coacts with the pin 355 of link 356. When the operating link 350 is rotated in a clockwise direction with respect to Figure 4, the operating lever 354 is raised to bear upwardly against the surface of pin 355 on link 356 and raises the pin 355.

Link 356 is formed by a pair of arms 360, 360 connected by a yoke 361, the ends of arms 360 opposite pin 355 being rotatably mounted on the cross-pin 400. Accordingly, when the pin 355 is raised by clockwise rotation of the operating link 350, the link 356 is also rotated in a clockwise direction around the pin 400.

Pin 355 carries rotatably mounted thereon the link 311 which is connected to the crank 310 and movable contact operating mechanism 34.

The means for rotating the operating link 350 comprises the rotatable shaft 363 which is rotatably mounted in bearings 364, 365 which extend from a base plate 366 secured in any suitable manner to the flanges 325 of the housing, the said shaft 363 being keyed to and rotating the cylinder 367 which rotates between the bearings 364, 365.

Cylinder 367 is provided with a cam 368 on which the roller 353 rests. Roller 353 is accordingly a cam follower. Rotation of shaft 363 in a clockwise direction rotates the cylinder 367 and cam 368 also in a clockwise direction to drive the roller 353 away from the front wall 324 of the housing 320 toward the rear thereof. This results in clockwise rotation of the operating link 350 around the pin 351, and in consequence raises the extension 354 thereof to bear upwardly against pin 355 and accordingly to rotate the link 356 in a clockwise direction also around the pin 351.

When the link 356 is thus raised from the lower position shown in Figure 4 to the upper position, it drives the free end of connecting link 311 forward to rotate the crank 310 of the movable contact assembly in a counterclockwise direction and thus to close the contacts.

Pin 355 carries a roller 370 which, of course, rises with the pin 355. At the completion of the closing movement of the operating mechanism, roller 370 rides up onto the top end of the abutment 372.

Abutment 372 is an extension of the sleeve 373, which sleeve is rotatably mounted on the pin 374, which in turn is also carried between the side walls 321 and 322. Sleeve 373 has a lower extension 375, which extension is embraced by one end 376 of the coil spring 377, the opposite end 378 of the coil spring 377 engaging the cross-pin 380 which also is mounted between the side walls 321, 322 of the housing. Coil spring 377 thus biases the sleeve 373 and the abutment 372 towards rotation in a clockwise direction with respect to Figure 5 around the pin 374.

In the open position of the circuit breaker, the rotation of the abutment 372 in a clockwise direction is limited by the fact that the lower extension 375 of sleeve 373 also engages pin 380.

As the pin 355 is raised, the roller 370 carried thereby bears against the front surface 381 of the abutment 372, and rotates said sleeve 373 and its shaft 363 and extension 375 in counterclockwise direction against the bias of spring 377, moving the abutment out of the way to permit the roller 370 to rise until the roller clears the top of the abutment. At this time, the spring 377 rotates the abutment 372 clockwise once more to its original position, at which position the extension 375 thereof engages the pin 380 once more, and further rotation of the abutment 372 clockwise in response to the bias of spring 377 is limited. The abutment 372 is brought to the specific position best shown in Figure 5 where it supports the roller 370.

At this time, therefore, on completion of the closing movement of the circuit breaker, the link 356 and link 311 which are in toggle relation with respect to each other, have their knee pin 355 supported by abutment 372.

Accordingly, the operating link 350 is no longer required to support the pin 355. The operating link is thus provided with a tension spring 385 connected at one end to the pin 386 on the side wall of the housing, and connected at the other end to pin 387 on the operating link 350, which pin is located at a point eccentric to the mounting pin 351; this spring biases operating link 350 toward rotation in counterclockwise direction. When the rotative force on shaft 363 is accordingly released after closing of the circuit breaker, the tension spring 385 will return the operating link 350 to the position shown in Figure 4. The shaft 363 will also be returned to its original position, since the bias on the operating link 350 which rotates it in a counterclockwise direction is transmitted through the roller 353 to the cam 368, which therefore rotates the cylinder 367 and shaft 363 back to the original position.

The specific circuit breaker operator shown comprises the handle 390 which has a rectangular opening which may be readily secured over the milled extension 391 of the shaft 363 (Figure 4) and may be integrated therewith in any suitable manner, as for instance by appropriate bolts passing through opening 392 of the milled extension 391 and the handle.

Since the cylinder 367 rotates in the bearings 364, 365, no further support for the cylinder is required. Accordingly, the milled extension 391 of the shaft 363 need not be rotatively carried in the front panel of the compartment. Instead, the escutcheon plate for the circuit breaker need be supported only from the shelf carried between the brackets, which in turn are supported by the steel panel carrying the entire circuit breaker. Therefore, simply on removal of the handle 390 the front panel of the compartment may be removed or the panel door may be swung open. This ensures a dead-front operation of the switchboard, since the front panel or front door is not operatively connected in any way to the circuit breaker itself. This is so because this type of construction eliminates the necessity for fastening anything to the front of the switchboard door. By making the opening in the switchboard door or panel sufficiently large, some interchangeability can be achieved by having the operating handle come out at different places for different type circuit breakers.

Link 356 is rotatably mounted on pin 400. Pin 400 during closing is normally stationary. However, during the tripping operation the pin 400 is so arranged that it will move to the right with respect to Figures 4 and 5. Since the roller 370 is mounted on pin 355 carried on the opposite end of link 356, the roller 370 will thus be pulled off the abutment 372 and thus permit the open-

ing tension of spring 257 of the movable contact assembly 34 to drive the link 311 to the right and thus collapse the operating mechanism.

Cross-pin 400 is mounted on the trip arm 402. Trip arm 402 as seen in Figures 4 and 5, has a yoke 403 connected thereto, the opposite end of the yoke carrying the short arm 404. The tripping arm 402 is rotatably mounted on the pin 351 which passes through the upper end of arms 402 and 404.

During the tripping of the circuit breaker, the trip arm 402 rotates in a clockwise direction around the pin 351, thus pulling the pin 400 mounted between elements 404 and 402 toward the right to cause the collapse of the operating mechanism in the manner above described.

The lower end of trip arm 402 is provided with a latch tip 405 engaging the milled shaft 406. Latch tip 405 registers with that portion of the shaft 406 having the milled groove 407, the said groove being milled through to a distance slightly beyond center.

In the normal operation of the circuit breaker with the circuit breaker elements closed as shown in Figure 5, the milled shaft 406 will resist any rotation of the latch tip 405 to the left, or in clockwise direction. Milled shaft 406 is so arranged, however, that on occurrence of a predetermined overload condition, it will be rotated clockwise in a direction to rotate the milled section 407 opposite the latch tip 405, so that the latch tip 405 will permit rotation of the trip arm 402 and thus will permit collapse of the operating mechanism.

Thus, in the closed position of the circuit breaker, the abutment 372 is supported at the end of the toggle comprising link 356 as one of the toggle elements, with the pin 400 forming the knee pin, and the portion of arm 404 between pin 400 and pin 351 acting as the other link of the toggle.

The knee pin 400 of this toggle is slightly above center so that the toggle may permit counterclockwise rotation of the portion of arm 404 between pins 400 and 351 to pull link 356 to the right to pull the roller 370 off the abutment.

Thus, on rotation of milled shaft 406 in a clockwise direction, the latch tip 405 is moved into the milled portion 407 in the milled shaft 406 by opening tension of the opening spring 257 transmitted thereto through link 311, link 356, and then to pin 400 mounted on the latching arm 402.

In order to return the latching arm 402 to its original latching position after tripping of the circuit breaker, a tension spring 401 is mounted between the pin 400 and the cross-pin 374 on the far side of the operating mechanism (with respect to Figure 4 and Figure 5). This tension spring is not sufficiently strong to counteract the opening tension of spring 257, but when the circuit breaker is completely open and the latch arm 402 is no longer subject to the opening tension thereof, this last-mentioned spring is sufficient to return the trip arm 402 to its original latching position, where it may engage the milled shaft 406.

The latch arm 402 also has an extension 410 on the opposite side of the milled shaft 406 from the latching tip 405 to prevent the latch arm 402 from being rotated counterclockwise about the pin 351 away from the milled shaft 406 during the resetting operation.

Accordingly, the moment the trip movement of the circuit breaker is completed, the elements

are all re-latched so that the circuit breaker may be promptly closed.

Milled shaft 402 is operated to tripping position by the tripping unit. The bolt 172 on the armature 170 acts as the striking member to rotate the trip shaft 412, rotatably mounted on the downwardly extending flange 413 of the insulating cover 190 and of shelf 188. The trip shaft 412 has a plurality of extensions 414, 414, one for each pole, each of which may be struck by striking the member or bolt 172 for that pole, and an additional downwardly extending extension 415 to limit counterclockwise rotation of the trip bar 412.

The trip bar 412 is held in position by clamping blocks 417 secured in any suitable manner to the downward extension 413 of shelf 188, and clamping plates 418, 418 secured over the recessed portions 419, 419 of shaft 412, which recessed portions are received in the recesses 420, 420 of the clamping blocks 417.

Trip shaft 412 has additional extensions 421, 421 projecting through openings 422, 422 in the extension 413 of the shelf 188 and its cover 190 to balance shaft 412 and further to limit rotation thereof in either direction.

The trip shaft 412 has a crank extension 425 to the end of which is connected, by the bolt 426, a link 427 which in turn is connected to the arm 430 of a bell crank lever 431 mounted on the milled shaft 406 and keyed thereto for rotation therewith.

Consequently, any operation of any of the armatures to rotate the trip shaft 412, will result in rotation of crank 425 to drive link 426 to rotate the bell crank lever 431 clockwise with respect to Figure 5 and thus rotate milled shaft 406 in a tripping direction.

The milled shaft 406 also has connected thereto the lever 435 (Figure 1) to one end 436 of which is connected the tension spring 437 which biases the milled shaft 406 to the non-tripping position after same has been tripped. The opposite end 438 of the lever engages an adjustable stop 439 which may be adjusted accurately to regulate the angular position of the milled groove 407 of milled shaft 406 with respect to latch 405.

Prevention of contact closing on physical shock

Since the circuit breaker herein disclosed is designed for use in connection with naval craft, which may at times be subject to severe physical shock owing to recoil or impact of gun fire or aerial bombs, various shock-absorbing means are provided both for the operating and tripping mechanisms.

Thus weight 440 is rotatably mounted on pin 380 and is so arranged that on occurrence of physical shock caused by vibration of the structural steel of the vessel, it will rotate counterclockwise with respect to pin 380. This occurs by reason of the fact that extension 441 thereof rests against the shelf through the structural steel to the framework which supports the circuit breaker panel, through the circuit breaker panel to the brackets 180, to shelf 188, then to extension 441 and weight 440.

The physical shock herein discussed is not merely heeling or skidding of the vessel, but rather a "billiard ball" type transmission of physical shock by the transmission of a wave through the material of the vessel at a speed of the order of 15,000 feet per second in steel structures.

When the weight 440 is thus kicked up by physical shock, the extension 443 thereof strikes the

pin 444 which sets the weight 455 in motion in a counterclockwise direction.

The weight 455 is rotatably mounted on pin 374, and has a lower extension 446 which on rotation of weight 455 in counterclockwise direction, moves over extension 448 of the link 356.

It will be clear that if the link 356 were to be kicked up in any way for a sufficient distance to engage roller 370 on the end of abutment 372, the circuit breaker would be closed. Consequently, my novel device driven by the weight 440 and additional weight 455—446 is designed to intercept the link 356 during its movement in response to shock, to prevent closing of the circuit breaker by shock. This interception occurs as above described because a physical shock will cause the weight 455 rotated by weight 440 to move over link 356 to prevent it from rising.

The extension 446 of weight 455 will move into position above extension 448 of link 356 under physical shock before the link 356 has time to move in response to the same shock. This is so because weight 440 is free to move directly in response to physical shock. It strikes the pin 444 a hammer blow at tremendous speed, thus rotating the weight 455—446 at high speed into the path of movement of extension 448 of link 356. Link 356, however, is not as free to move as are weights 440 and 455, since the link 356 is connected to the entire operating mechanism of the circuit breaker and is subject to the tension of the heavy opening spring 257 (Figure 1). Accordingly, extension 446 of weight 455 will arrive in blocking position with respect to link 356 before said link can begin to move toward closing position.

In addition, it should be noted that a space has been left between the upper surface of extension 448 on link 356 and the cooperating surface of balanced weight 446 (Figures 4A and 5). This is done to ensure that a sufficient amount of the blocking surface of member 446 will be interposed in the path of extension 448 to take care of vibratory action occasioned by severe physical shock.

My device thus includes a balanced weight actuated by an unbalanced weight subject to physical shock and because of these conditions, it responds faster to shock than the other parts of the operating mechanism.

In the foregoing, I have described my means for preventing accidental closing of a circuit breaker in response to physical shock in connection with one illustrative form thereof used on one representative type of circuit breaker. Since many modifications and variations of my invention will now be apparent to those skilled in the art, I prefer to be bound not by the specific description herein set forth but by the appended claims.

I claim:

1. In a circuit breaker, a movable contact and a complementary contact; operating means for said movable contact; said operating means comprising a toggle including a first link connected at one end to said movable contact and connected at its opposite end to a knee pin and a second link connected at one end to said knee pin and at its opposite end to a normally stationary pivot; a roller carried by said knee pin; an abutment; said roller resting on said abutment when said toggle is extended to close said circuit breaker; biasing means tending to collapse said toggle and push said roller off said abutment; a latch member connected to said second link resisting said biasing means and operable in response to current conditions in said circuit breaker to collapse said toggle; operating means for extending said toggle against the force of said biasing means, and means for preventing accidental extension of said toggle to a point where the roller rests on said abutment in response to physical shock, said last mentioned means comprising a member movable in response to physical shock; an extension of one of the links of the toggle; said member, when moved by physical shock, moving into the path of movement of said extension of said toggle.

2. In a circuit breaker, a movable contact and a complementary contact; operating means for said movable contact; said operating means comprising a toggle including a first link connected at one end to said movable contact and connected at its opposite end to a knee pin and a second link connected at one end to said knee pin and at its opposite end to a normally stationary pivot; a roller carried by said knee pin; an abutment; said roller resting on said abutment when said toggle is extended to close said circuit breaker; biasing means tending to collapse said toggle and push said roller off said abutment; a latch member connected to said second link resisting said biasing means and operable in response to current conditions in said circuit breaker to collapse said toggle; operating means for extending said toggle against the force of said biasing means; and means for preventing accidental extension of said toggle to a point where the roller rests on said abutment in response to physical shock, said means comprising a member movable in response to physical shock; an extension of one of the links of the toggle; said member, when moved by physical shock, moving into the path of movement of said extension of said toggle, the means for moving said member in response to physical shock comprising a weight; said weight, when moved in response to physical shock, striking said member and moving the same into the path of said extension.

3. In a circuit breaker, a movable contact and a complementary contact; operating means for said movable contact; said operating means including a toggle; said toggle, when extended, moving said movable contact to said complementary contact; said contacts being in the open position when the toggle is collapsed; and means for preventing accidental extension of said toggle in response to a physical shock; said means comprising a balanced weight and an unbalanced weight; said unbalanced weight being movable in response to physical shock to actuate said balanced weight into position to prevent extension of said toggle.

4. In a circuit breaker, a movable contact and a complementary contact; operating means for said movable contact; said operating means including a toggle; said toggle, when extended, moving said movable contact to said complementary contact; said contacts being in the open position when the toggle is collapsed; and means for preventing accidental extension of said toggle in response to a physical shock; said means comprising a balanced weight and an unbalanced weight; said unbalanced weight being movable in response to physical shock to actuate said balanced weight into position to prevent extension of said toggle; said weights moving faster than said toggle in response to physical shock.

5. In a circuit breaker, a movable contact and a complementary contact; operating means for said movable contact; said operating means including a toggle; said toggle, when extended,

moving said movable contact to said complementary contact; said contacts being in the open position when the toggle is collapsed; and means for preventing accidental extension of said toggle in response to a physical shock; said means comprising a member independently movable in response to a physical shock; said member, when moved by physical shock, moving into the path of movement of a portion of said toggle to prevent extension thereof.

6. In a circuit breaker, a movable contact and a complementary contact; operating means for said movable contact; said operating means including a toggle; said toggle, when extended, moving said movable contact to said complementary contact; said contacts being in the open position when the toggle is collapsed; and means for preventing accidental extension of said toggle in response to a physical shock; said means comprising a weight independently movable in response to physical shock; a member movable thereby into the path of movement of a portion of said toggle; said weight, when moved in response to physical shock, striking said member and moving the same into the path of movement of said toggle.

7. In a circuit breaker, a movable contact and a complementary contact; operating means for said movable contact; said operating means including a toggle; said toggle, when extended, moving said movable contact to said complementary contact; said contacts being in the open position when the toggle is collapsed; and means for preventing accidental extension of said toggle in response to a physical shock; said toggle having an element extending therefrom and movable therewith from collapsed to extended position; said means comprising a member independently movable in response to a physical shock; said member, when moved by physical shock, moving into the path of movement of said extending element to prevent extension of said toggle.

8. In a circuit breaker, a movable contact and a complementary contact; operating means for said movable contact; said operating means including a toggle; said toggle, when extended, moving said movable contact to said complementary contact; said contacts being in the open position when the toggle is collapsed; and means for preventing accidental extension of said toggle in response to a physical shock; said means comprising a rotatably mounted weight independently movable in response to physical shock; a member movable thereby into the path of movement of a portion of said toggle; said weight, when moved in response to physical shock, striking said member and moving the same into the path of movement of said toggle.

9. In a circuit breaker, a movable contact and a complementary contact; operating means for said movable contact; said operating means including a toggle; said toggle, when extended, moving said movable contact to said complementary contact; said contacts being in the open position when the toggle is collapsed; and means for preventing accidental extension of said toggle in response to a physical shock; said means comprising a rotatably mounted member independently movable in response to a physical shock; said member, when moved by physical shock, moving into the path of movement of a portion of said toggle to prevent extension thereof.

CHARLES J. YARRICK.

REFERENCES CITED

The following references are of record in the file of this patent:

UNITED STATES PATENTS

Number	Name	Date
570,212	Wurts	Oct. 27, 1896
1,119,971	MacDonald	Dec. 8, 1914
2,162,511	May	June 13, 1939
2,353,406	Kouyoumjian	July 11, 1944
2,374,615	Nickell	Apr. 24, 1945
2,382,995	Immel et al.	Aug. 21, 1945
2,389,400	Anderson	Nov. 20, 1945
2,412,294	Scott, Jr.	Dec. 10, 1946
2,438,373	Oppel	Mar. 23, 1948