(No Model.) 3 Sheets—Sheet 1.

S. T. WELLMAN.

CAR WHEEL.

No. 271,286. Patented Jan. 30, 1883.

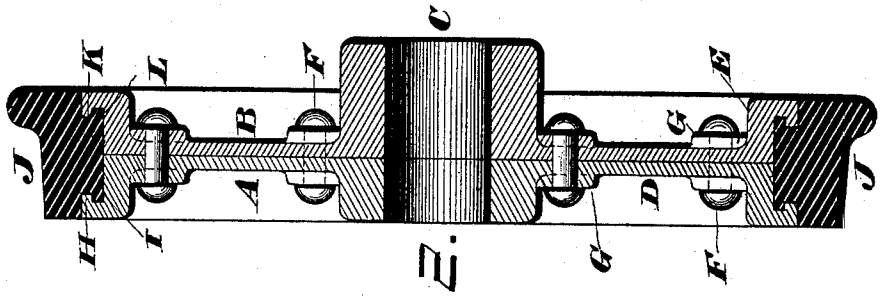

FIG. 2.

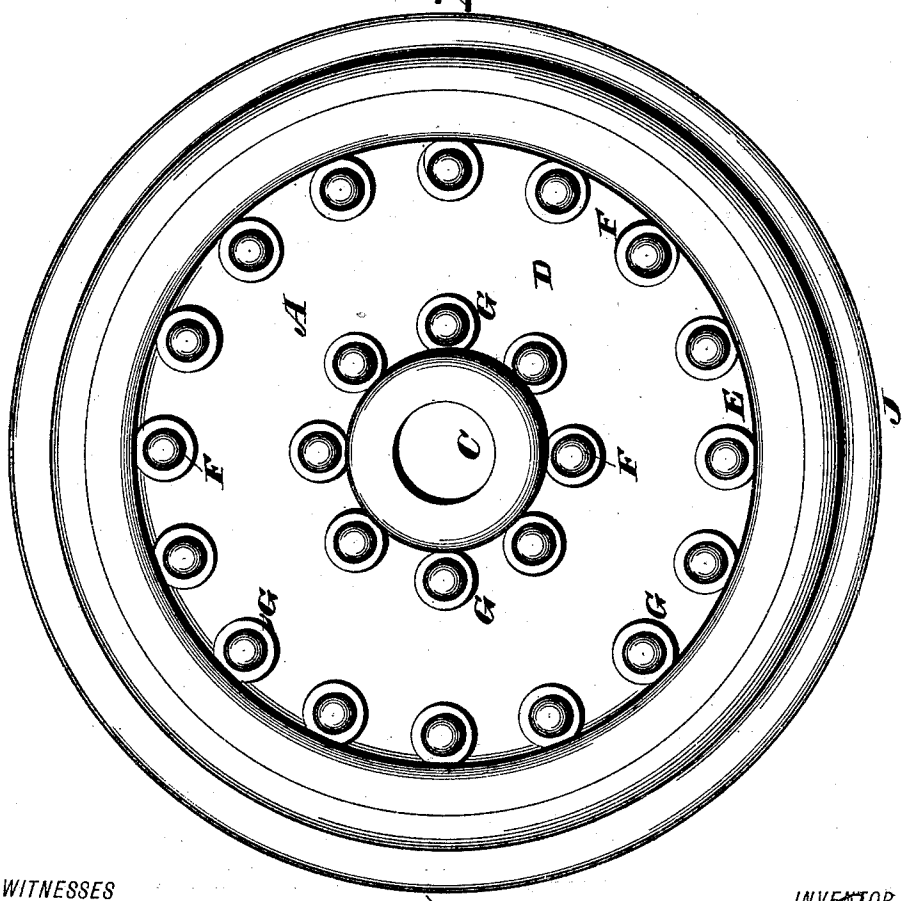

FIG. 1.

WITNESSES

E. L. Nottingham

Geo. D. Seymour.

INVENTOR

Samuel T. Wellman

By R. A. Seymour.

Attorney

N. PETERS. Photo-Lithographer, Washington, D. C.

(No Model.) 3 Sheets—Sheet 2.

S. T. WELLMAN.

CAR WHEEL.

No. 271,286. Patented Jan. 30, 1883.

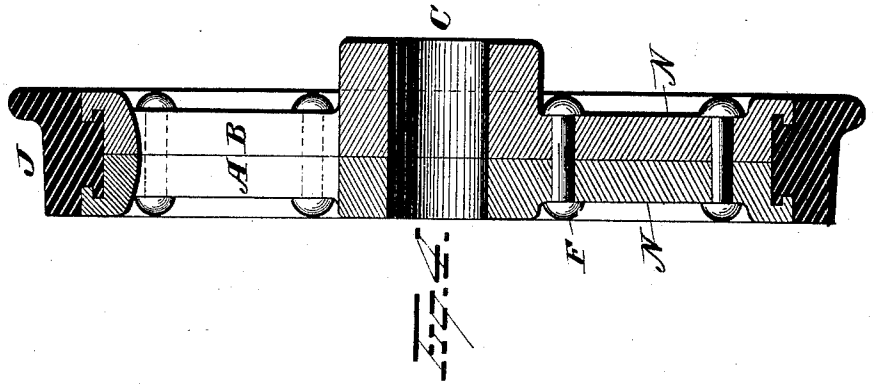

FIG. 2.

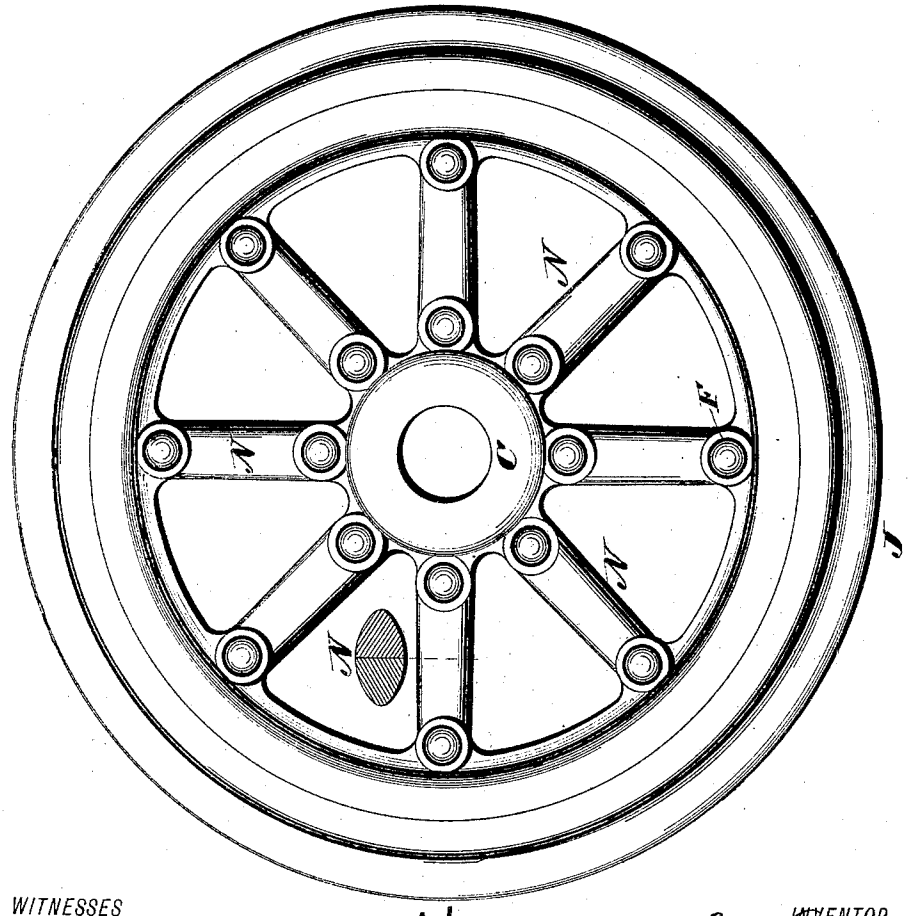

FIG. 1.

WITNESSES

P. De Nottingham

Geo. W. Seymour

INVENTOR

Samuel T. Wellman

By H. A. Seymour

Attorney

N. PETERS, Photo-Lithographer, Washington, D. C.

(No Model.) 3 Sheets—Sheet 3.

S. T. WELLMAN.

CAR WHEEL.

No. 271,286. Patented Jan. 30, 1883.

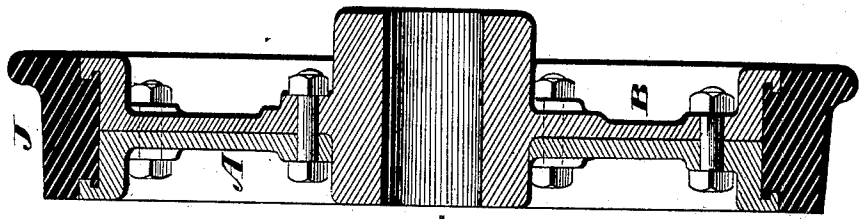

Fig. 2.

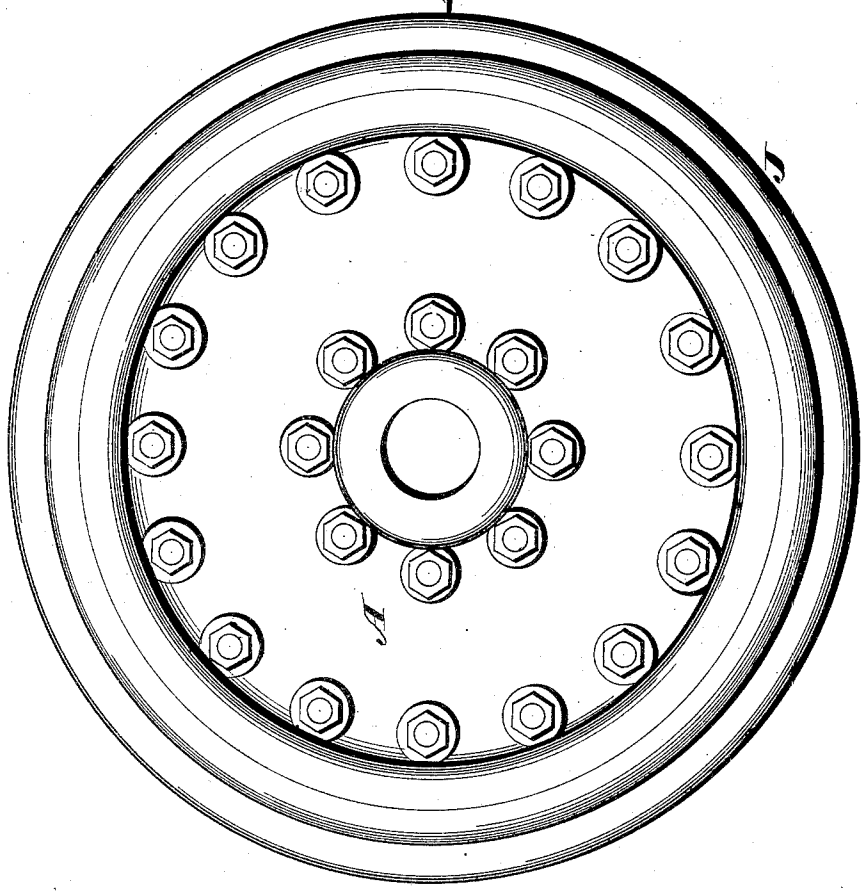

Fig. 1.

WITNESSES

E. Nottingham

Geo. A. Seymour

INVENTOR.

Samuel T. Wellman

By A. A. Seymour.

Attorney

N. PETERS, Photo-Lithographer, Washington, D. C.

UNITED STATES PATENT OFFICE.

SAMUEL T. WELLMAN, OF CLEVELAND, OHIO.

CAR-WHEEL.

SPECIFICATION forming part of Letters Patent No. 271,286, dated January 30, 1883.

Application filed April 20, 1882. (No model.)

To all whom it may concern:

Be it known that I, S. T. WELLMAN, of Cleveland, in the county of Cuyahoga and State of Ohio, have invented certain new and useful Improvements in Car-Wheels; and I do hereby declare the following to be a full, clear, and exact description of the invention, such as will enable others skilled in the art to which it pertains to make and use the same.

My invention relates to an improvement in car-wheels, the object being to construct a sectional car-wheel which shall be provided with a hard-steel tread, the central portions, including the hub, body, and rim, being formed by the union of sections of soft cast-steel.

A further object of my invention is to construct a sectional car-wheel in which the tread is so locked to the rim that even though it be broken into segmental sections, it will not be released therefrom.

A further object of my invention is to construct a sectional steel car-wheel which shall combine lightness, simplicity, and cheapness of construction with great strength and durability.

With these objects in view my invention consists in certain details of construction and combinations of parts, as will be hereinafter described and pointed out in the claims.

In the accompanying drawings, Figure 1 is a view in side elevation of a sectional steel car-wheel embodying my invention. Fig. 2 is a view thereof in transverse cross-section. Figs. 3 and 4 are views in side elevation and transverse cross-section, respectively, of a modified form of my improved car-wheel; and Figs. 5 and 6 are similar views of another modified form which my improvement may assume.

The central portions of the car-wheel are formed by soft cast-steel plates A and B, which respectively form the inner and outer faces thereof, and which by their union constitute the hub C, the body D, and the rim E. The said plates are united by rivets F, the heads of which are supported upon bosses G, cast integral with the plates, the outer edges of which are bent at right angles to form the rim E, said edges being also provided with flanges H and channels I. The tread or tire J, which consists of a ring of hard steel, is provided on its inner and outer faces with annular grooves K, adapted to receive the flanges H of the plates A and B, the channels I thereof being adapted to receive the edges L of the inner periphery of the tread.

In constructing one of my improved car-wheels the soft cast-steel plates are first temporarily secured together for the purpose of boring the rivet-holes, and also of effecting such turning as may be necessary to finish the plates. The tread of hard cast-steel, which has been previously turned to the required shape, (allowance being made for shrinkage,) is now heated, and the plates A and B placed on opposite sides of it in such manner as to engage their flanges with its annular grooves. When this adjustment is obtained the plates are permanently secured together by rivets, as shown. After the wheel is formed in this manner the outer periphery of the tread is turned and finished; but this may be done before it is secured to the plates, if desired. During the operation of finally securing the plates together and locking the tread to them hydraulic or other pressure may be employed as an auxiliary to the process.

It is apparent that if the tread is broken into segmental sections it will not be released from the tire, and therefore no immediate accident need result from the breakage of the tread of one of my improved wheels.

Aside from the superiority above set forth which my improved wheel possesses over those now in use, it has the advantage of being not only much lighter, but also much stronger than the ordinary wheel, for it is intended that the tensile strength of the soft-iron plates be as high as from sixty thousand to seventy thousand pounds to the square inch. A wheel is thus constructed which combines a hard-steel tread with a soft-steel center of great tensile strength.

The modified form of wheel shown in Figs. 3 and 4 of the drawings is substantially the same as the wheel shown in Figs. 1 and 2 of the drawings, the only difference being that instead of having an imperforate body, the same is formed of spokes N, which are riveted together, and which are cast integral with the inner and outer plates of the wheel.

In the modified form of wheel shown in Figs. 5 and 6 of the drawings the hub is formed with the outer plate alone, the inner plate being provided with a central aperture to fit

over the inner portion of the hub. In this wheel also the plates are secured together by bolts, which may, if desired, be applied to the wheels shown in the first figures of the drawings.

I would have it understood that I do not limit myself to the exact construction shown, but hold myself at liberty to make such slight changes and alterations as fairly fall within the spirit and scope of my invention.

Having fully described my invention, what I claim as new, and desire to secure by Letters Patent, is—

1. A car-wheel consisting of a solid hard steel tire or tread and body and hub portions, composed of soft cast-steel sections, the adjacent faces or sides of which are seated against each other and secured near the hub and tire by rivets, the said tire being adapted to receive the outer edges of the body and hub sections and to be locked to them when they are brought together, substantially as set forth.

2. A car-wheel consisting of hard-steel tire or tread having annular grooves formed in its opposite sides, and body and hub portions composed of soft cast-steel sections, the adjacent faces or sides of which are seated against each other, the outer edges of the body-sections being provided with inwardly-projecting flanges that enter the grooves in the tires, and rivets extending through the body-sections and located inside the tire and other rivets located near the hub, substantially as set forth.

In testimony whereof I have signed this specification in the presence of two subscribing witnesses.

SAMUEL T. WELLMAN.

Witnesses:
GEO. D. SEYMOUR,
HERMAN MORAN.