F. F. BURDICK.

ELECTRIC THERAPEUTIC DEVICE.

APPLICATION FILED JUNE 6, 1914.

**1,183,949.**

Patented May 23, 1916.

2 SHEETS—SHEET 1.

*Fig. 1.*

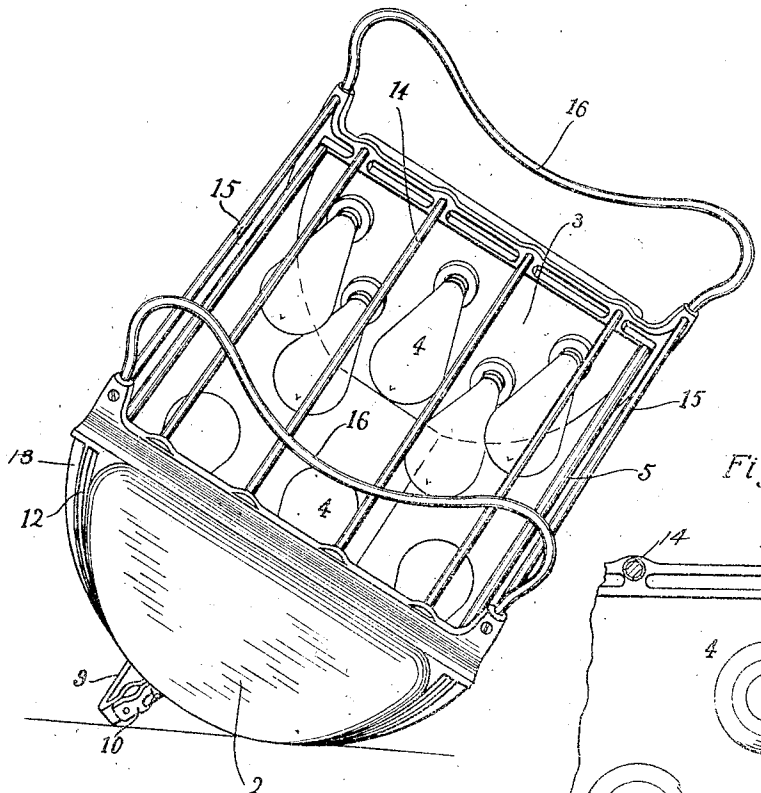


*Fig. 2.*

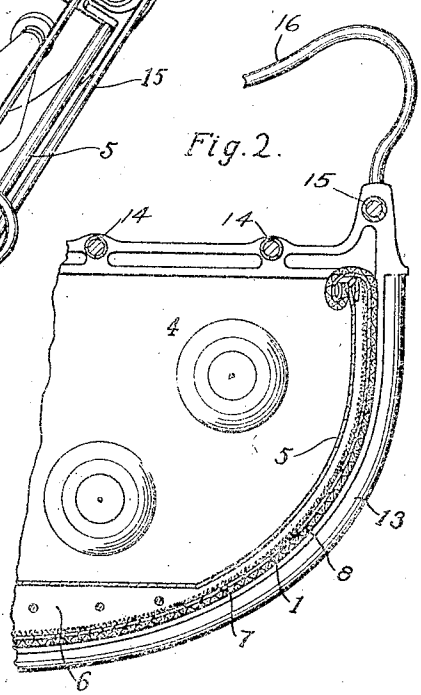


Witnesses

W. H. Klamt.

Walter F. Stone

By

Inventor

Fred F. Burdick

Kummler & Kummler

Attys.

F. F. BURDICK.

ELECTRIC THERAPEUTIC DEVICE.

APPLICATION FILED JUNE 6, 1914.

1,183,949.

Patented May 23, 1916.

2 SHEETS—SHEET 2.

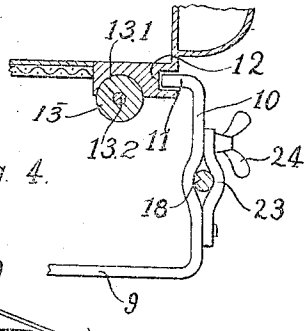


Fig. 4.




Fig. 3.

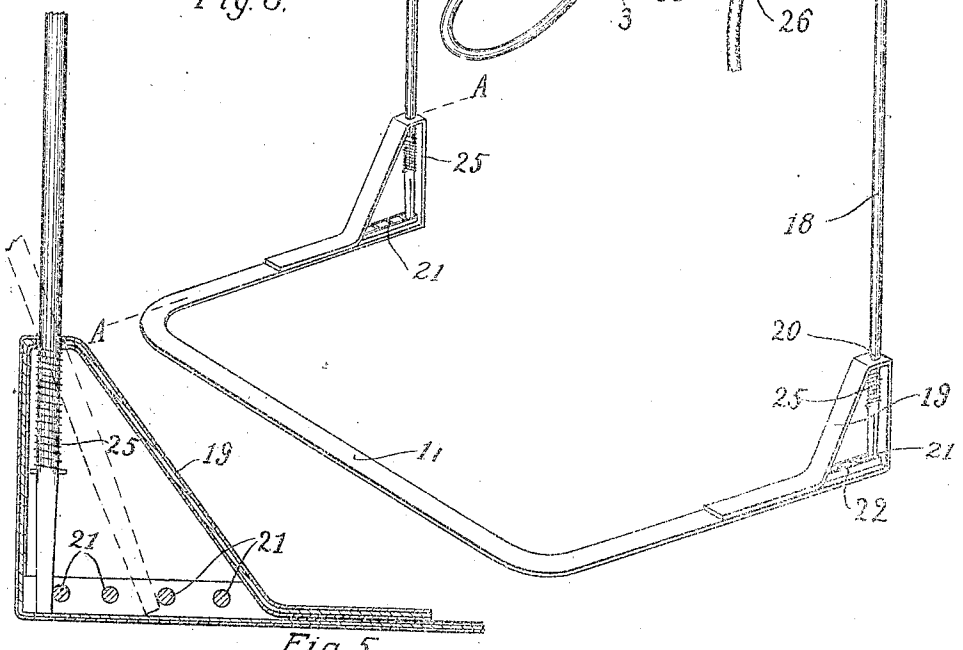


Fig. 5.

A-A Fig. 3.

Witnesses

W. H. Klamt.

Walter F. Stone.

Inventor

Fred F. Burdick

By Lummus Lummus

Attys.

# UNITED STATES PATENT OFFICE.

FRED F. BURDICK, OF MILTON, WISCONSIN.

## ELECTRIC THERAPEUTIC DEVICE.

1,183,949. Specification of Letters Patent. Patented May 23, 1916.

Application filed June 6, 1914. Serial No. 843,386.

*To all whom it may concern:*

Be it known that I, FRED F. BURDICK, a citizen of the United States of America, and a resident of Milton, county of Rock, and State of Wisconsin, have invented certain new and useful Improvements in Electric Therapeutic Devices, of which the following is a specification.

The main objects of this invention are to provide an improved form of electro-therapeutic device constructed so as to be conveniently supported and adjusted for use in treating any part of the body of a patient whether the patient is in a standing, sitting, or lying posture; to provide an improved construction of the casing for a device of this kind which will permit it to rest on the floor or a table when being used or be suspended from a supporting standard, to provide improved means for supporting said casing in any desired angular position whether on the floor or table or suspended from said standard; to provide an improved arrangement of friction means for preventing slipping of said casing when resting on the floor or a table; and to provide an improved arrangement of guards on said device adapted to protect the body of the patient or other objects when treatment is being given.

An illustrative embodiment of this invention is shown in the accompanying drawings, in which—

Figure 1 is a perspective view of the device as it is used on the floor. Fig. 2 is a fragmentary transverse sectional detail of the same. Fig. 3 is a perspective view of the device suspended in an inverted position on a supporting standard. Fig. 4 is an enlarged detail partly sectional showing the manner in which the supporting yoke-member engages the casing. Fig. 5 is an enlarged sectional detail taken on the line A—A of Fig. 3.

In the construction shown in the drawings the hood or casing in which the applicators are supported is made semi-cylindrical in form having one side thereof open and having the ends closed by end plates 2 and 3. The hood or casing 1 and end members or heads 2 and 3 are preferably cast from a light metal such as aluminum so that the device is light and may be easily handled. Incandescent applicators or heaters in the form of a plurality of incandescent electric lamps 4 are suitably arranged on the heads 2 and 3 of the device substantially as shown in Fig. 1 of the drawings so that they are exposed through the open side of the casing.

A reflector 5 is secured within the casing 1 for the purpose of reflecting the heat generated by the electric lamps 4. This reflector is also made of aluminum having the inner face thereof polished, and having its middle portion spaced away from the casing 1 so as to provide a space 6 extending along the casing in which the wires for the lights 4 are located. A heat insulating lining 7, preferably of asbestos, is interposed between the casing 1 and the reflector 5 so as to prevent the exterior surface of the casing from becoming intensely heated. A covering 8 of plush, or other suitable material, is secured over the outer surface of the casing 1 so as to give it a finished appearance and also to absorb such heat as penetrates the insulating lining 7 and reaches the casing 1.

The support for the device comprises a yoke-member 9, preferably made of flat metal, and having transversely disposed parallel arms 10, the ends of which are bent inwardly toward each other so as to form shoulders 11. Annular grooves 12 are formed in the heads 2 and 3 so as to provide annular rims or shoulders thereon which constitute parallel ways which the shoulders 11 engage. The shoulders 11 bind in the ways when the supporting member 9 is tilted with respect to the casing. The yoke-member 9 being made of resilient material, is adapted to have the arms 10 sprung for the purpose of inserting or withdrawing the ends 11 from the grooves 12. In the construction herein shown, the shoulders 11 will bind in the grooves 12 when the yoke-member 9 is shifted so that the arms 10 are out of a radial position with respect to said device but will move freely therein when said yoke-member is maintained in radial position. The yoke-member is adapted to be used for suspending the casing in an inverted position from a standard or for holding the casing in any angular position when resting on the floor or a table.

In order that the device may be held against shifting when used on the floor or a table, a pair of rubber tires 13 are secured in grooves $13^1$ formed in the rims of the heads 2 and 3 and are held in place by having the wire cores $13^2$ thereof secured at

their ends to the casing in any suitable manner.

To guard against objects coming into contact with the heaters, a plurality of longitudinally disposed rods 14 are arranged to cross the opening of the casing 1, which are also used for securing the heads 2 and 3 to the casing 1. The rods 15 along the edges of the casing are offset above the plane of the rods 14, so as to provide heel rests for the feet when resting upon the rods 14. Other rods 16 are arranged across the heads 2 and 3 transversely to the rods 14, and are bowed downwardly along the middle thereof toward the casing 1. These are adapted to space the device a suitable distance away from the patient's body when it is used with the patient lying down.

The rods 14, 15 and 16 are all covered with rubber tubing, as shown in Fig. 2, so that they are insulated from the heat of the lamps 4 and thereby prevent burning of any objects that come into contact therewith.

When the device is to be used in a suspended position, the yoke-member 9 is secured to rods or bars 18 supported on a base member 17. The base member 17 is preferably formed of flat metal and as herein shown is bent to U-shape and has the ends of the parallel legs thereof bent so as to form upwardly disposed parts 19. Apertures 20 are formed in the tops of the upstanding parts and are adapted to receive the rods 18. The inner ends of the rods 18 are received between the pins 21 of the rack 22 secured to the base member 17 between the legs of the upstanding parts 19, so that the rods are maintained in their angular positions with respect to said base.

The attachment for securing the yoke 9 to the rods 18 comprises clamp members 23 attached to each of the arms 10 of said yoke-member. Each clamp is pivoted at one of its ends to the corresponding arm 10, and adjustably secured at its other end by means of a bolt and wing-nut 24. The clamps 23 and arms 10 adjacent thereto are bent so as to more firmly grip the rods 18. Springs 25 embrace the rods 18 inwardly of the upstanding parts 19 and normally urge the rods 18 into contact with the racks 22.

The lamps 4 are connected by a conductor cord 26 to a source of electricity and to a suitable controlling switch 27, by means of which the number of lights in service, and consequently the heating effect, may be varied during the operation of the device.

The operation of the device shown is as follows: If the device is to be used for treatment of the feet or lower limbs, it is usually set on the floor, as shown in Fig. 1 and is maintained in any suitable angular position by shifting the yoke 9 so that the ends 11 thereof will bind in the grooves 12 when the yoke rests on the floor, with the arms 10 out of a radial position with respect to the casing. The patient may then sit in a chair and place the feet upon the guard bars 14 with the heels resting against one of the rods 15. Part or all the lights may be turned on, by means of the switch 27, depending upon the temperature desired. A curtain or bag may be wrapped about the lower limbs and draped around the device so as to confine the heat if it is desired.

If treatment of a patient is to be made when the patient is lying down, the device is attached to the rods 18, as shown in Fig. 3. In cases where the patient is not confined to the bed, and is able to move about, the device would preferably be used on the floor or on a table, so as to provide a rigid support for the supporting base 17. The device would then be adjusted over that part of the body which is to be treated, and brought into the desired proximity thereto. A sufficient number of lights are then turned on to give the desired degree of heat. Should the patient be confined to the bed, the device is used by placing the supporting base 17 under the patient. In such a case it is likely that the supporting base 17 would be tilted downwardly on account of the sagging of the mattress, and in order to have the rods 18 vertical, it would be necessary to set them at an inclined angle to the base 17 as shown in dotted outline in Fig. 5. This would permit the device to be supported in a horizontal position. The device may then be moved as close to the patient as desired by adjusting it along the rods 18 by means of the clamps 23. When the device is used in such an inverted position, a canopy or curtain may also be used, fastened around the edges of the device and draped about the patient.

Although but one specific embodiment of this invention has been herein shown and described, it will be understood that numerous details of the construction shown may be altered or omitted without departing from the spirit of this invention as defined by the following claims.

I claim:—

1. In an electric-therapeutic device, the combination of a casing having an electric heater arranged therein, substantially annular ways on said casing, a supporting member, and shoulders on said supporting member arranged to slidably engage said ways, said shoulders being adapted to bind on said ways when said member is tilted whereby said member is adapted to support said casing in various angular positions.

2. In an electro-therapeutic device, the combination of a casing having an electric heater arranged therein, substantially annular and parallel ways on said casing at the ends thereof, a supporting member, and shoulders on said supporting member ar-

ranged to slidably engage said ways, said shoulders being adapted to bind on said ways when said member is tilted whereby said member is adapted to support said casing in various angular positions.

3. In an electro-therapeutic device, the combination of a casing having an electric heater arranged therein, substantially annular and parallel ways on said casing at the ends thereof, a supporting member, shoulders on said supporting member arranged to slidably engage said ways, said shoulders being adapted to bind on said ways when said member is tilted, and means on said member adapted for connection to a supporting standard whereby said casing may be supported thereon in various angular positions.

4. In an electro-therapeutic device, the combination of a casing having one side thereof open, parallel annular rims on said casing adapted to support said casing with the open side thereof upward, substantially annular and parallel ways formed on said casing, a supporting member having sliding engagement with said ways and adapted to grip the ways when tilted relatively thereto whereby said casing may be supported in various angular positions by said rims and member.

5. In an electro-therapeutic device, the combination of a casing having electric heaters arranged therein, said casing having annular grooves formed thereon adjacent to its ends, and a supporting member having transversely disposed parallel arms, the ends of which are bent inwardly and shaped to be received in said grooves, said ends being adapted to bind in said grooves when tilted relatively thereto whereby said member is adapted to support said casing in various angular positions.

6. In an electro-therapeutic device, the combination of a casing having electric heaters arranged therein, said casing having annular grooves formed thereon adjacent to its ends, a supporting member having transversely disposed parallel arms the ends of which are bent inwardly and shaped to be received in said grooves, said ends being adapted to bind in said grooves when tilted relatively thereto, and clamp members secured to said arms and adapted to coact therewith to engage a supporting standard, whereby said casing may be suspended in various angular positions.

7. In an electro-therapeutic device, the combination of a casing having annular grooves formed therein at each end, a yoke member having transversely disposed arms the ends of which are bent inwardly so as to be received in said grooves, said ends being shaped to bind in said grooves for supporting said casing when said member is tilted with respect thereto, a supporting base, uprights carried by said base, and clamping means on said yoke member adapted to grip said rods for supporting said casing in operative position.

8. In an electro-therapeutic device, the combination of a casing having annular grooves formed therein at each end, a yoke member having transversely disposed arms the ends of which are bent inwardly so as to be received in said grooves, said ends being shaped to bind in said grooves for supporting said casing when said member is tilted with respect thereto, a supporting base having the ends thereof bent to form upstanding parts having apertures in the tops thereof, racks secured to said supporting base between the arms of said upstanding parts and upright rods supported by said base member by being inserted through said apertures and having the ends engaging said racks, and clamp members carried by said yoke member and adapted to engage said rods for supporting said device.

Signed at Chicago this 3rd day of June, 1914.

FRED F. BURDICK.

Witnesses:
EUGENE A. RUMMLER,
WILLIAM E. HANN.