May 23, 1967 MASAO NAKASU ET AL 3,320,974

ANGLE-VALVE WITH VARIABLE INTAKE PORT AREA

Filed Jan. 27, 1964 2 Sheets-Sheet 1

Fig. 1

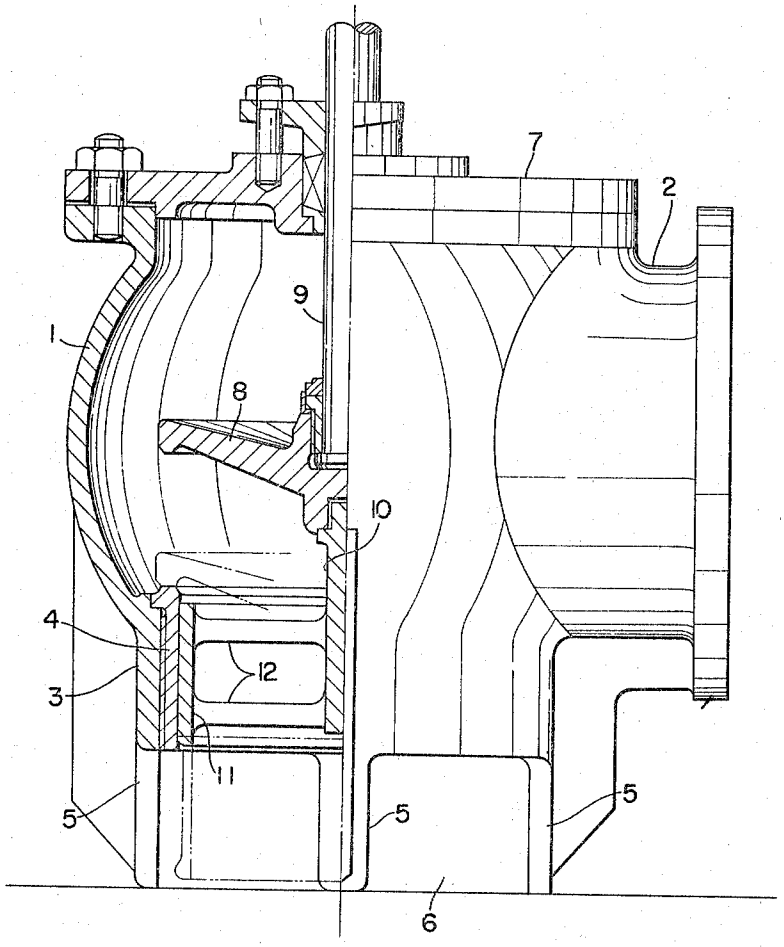

INVENTORS
MASAO NAKASU, HIROTO SHIMONAKA
AND KAZUHIKO SHINODA
BY
Linton and Linton
ATTORNEYS

May 23, 1967 MASAO NAKASU ET AL 3,320,974

ANGLE-VALVE WITH VARIABLE INTAKE PORT AREA

Filed Jan. 27, 1964 2 Sheets-Sheet 2

Fig. 2

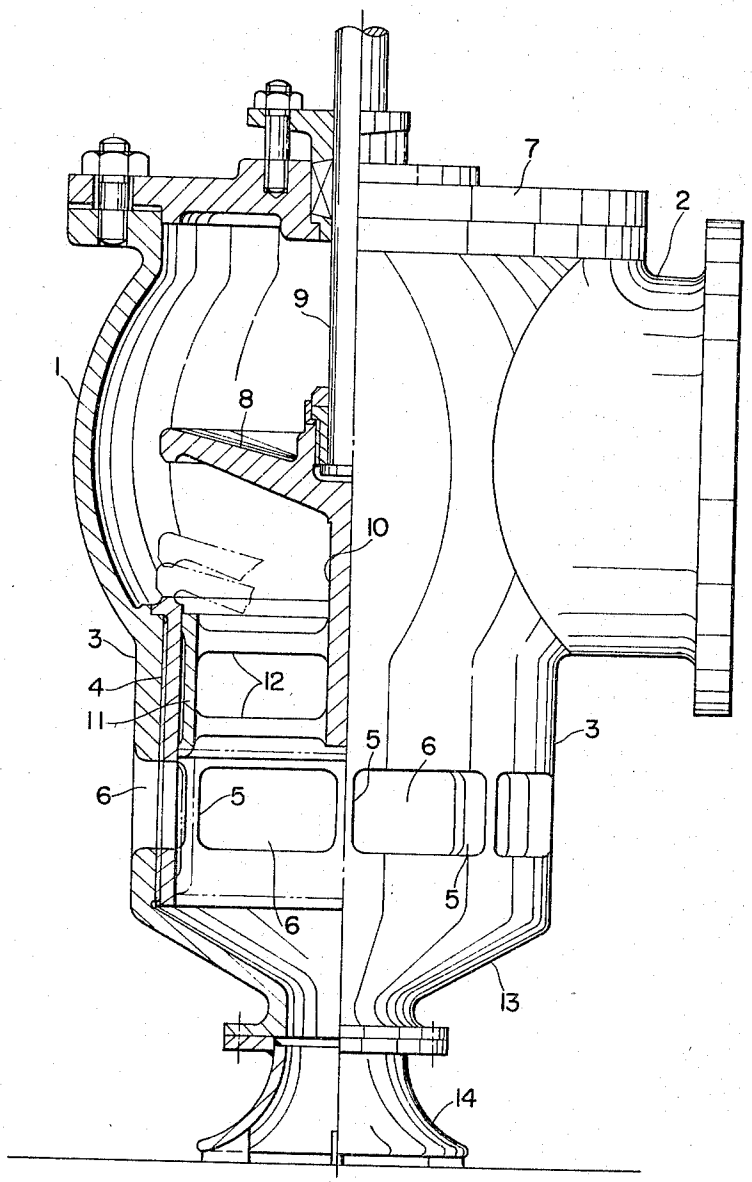

INVENTORS
MASAO NAKASU, HIROTO SHIMONAKA
AND KAZUHIKO SHINODA
BY
Linton and Linton
ATTORNEYS

United States Patent Office 3,320,974 Patented May 23, 1967

3,320,974

ANGLE-VALVE WITH VARIABLE INTAKE PORT AREA

Masao Nakasu, Kita-ku, Osaka-shi, and Hiroto Shimonaka and Kazuhiko Shinoda, Innoshima-shi, Hiroshima-ken, Japan, assignors to Hitachi Zosen Kabushiki Kaisha, Osaka-shi, Japan

Filed Jan. 27, 1964, Ser. No. 340,230
Claims priority, application Japan, June 22, 1963, 38/33,243
2 Claims. (Cl. 137—605)

The present invention is concerned with an angle-valve with variable intake port area used for loading and unloading a liquid in a tank through one suction pipe. That is to say, in order to unload a liquid cargo in a large tank such as of an oil tanker through one suction pipe, it is necessary to reduce the suction resistance of the intake port provided at the end of the suction pipe and to minimize the remaining liquid on the tank bottom. As a means therefor, it is possible to attain this purpose by lowering the intake port provided at the end of the suction pipe in accordance with changes of the liquid level, but such a conception is generally well known and several kinds of intake ports based upon those conventional means have been proposed. In an oil tanker, in general, to which such a device is mostly applied for use, individual suction pipes, that is main and stripping pipes are provided respectively with a stop valve, while the intake port means so far proposed are all such that a stop valve is provided separately from the intake port, and therefore, the conventional means have shortcomings such that the manufacturing cost of the equipment would be high and the operation thereof complicated.

The present invention is an angle-valve which has eliminated such defects as above mentioned and is so devised that the angle-valve that forms a stop valve is composed of a special structure which is provided with the functions of both a stop valve and a variable intake port and is able to be operated to open and close a valve disc and to make the intake port area variable by using one drive shaft. In said angle-valve the structure is characterized by a cylindrical part underneath the main valve body which includes a horizontal pipe line on a spherical side thereof, and a liner inside the said cylindrical part. The opening and closing of said cylindrical part is carried out by separating or engaging the circumference of the valve disk with the upper end of the said liner and which when open provides a fluid course so as to discharge a fluid from the said cylindrical part up to the horizontal pipe line. The cylindrical part has a variable intake port area which forms an intake port between feet at the lower end of the said cylindrical body. Further, a valve stem engages the center of the underside of the said valve disc and this valve stem is connected to a tubular slide valve, so arranged as to slide up and down along the inside surface of the liner, by way of a linking arm. To open and close the stop valve and the intake ports, and to change the height and area of their opening said tubular slide valve is interlocked with the stop valve connected to a drive shaft which can be moved axially enabling an intake of a liquid from said intake ports which can be substantially varied and also cut out from the pipe line. By using the present invention there will be no need for providing a suction pipe with a separate stop valve, and it will be possible to intake the entire amount of the liquid in a tank completely without increasing the flow resistance, and also to simplify the piping and operation of the systems more than those heretofore conventionally used.

Reference will now be made to the accompanying drawings which show embodiments of the present invention by way of example, and in which:

FIG. 1 shows a partial, vertical section of an angle-valve with variable intake port area of a preferred example of the present invention, and

FIG. 2 shows a partial, vertical section of another modified embodiment of the present invention.

1 is the hollow main body of an angle-valve so formed as to provide a protruding horizontal pipe line 2 on one side of the spherical circumference thereof. The lower part of said main body has a cylindrical part 3 formed integral therewith, and a liner 4 is inserted inside said part and overlaps the same. Feet 5 whose external surface is reinforced by ribs, protrude from the lower end circumference of said cylindrical part 3, and an intake port 6 is formed between said feet when the lower end of said feet is on the bottom of a tank so that the fluid may be taken in. The upper end of the said valve body 1 is closed by a plate 7 bolted thereto. A valve disc 8, is installed inside said valve body 1 and is disc shaped so as to be opened and closed by the vertical movement of said valve disc relative to the cylindrical part 3. The center part of the upper side of said disc is connected with the lower end of the drive shaft 9 which is oil-tightly penetrating through the said upper-end plate. The opening and closing of said discs is carried out by the vertical movement of said drive shaft with the closing thereof being shown in the drawings by chain lines where the circumference of the valve disc 8 engages the upper end of the liner 4 and thus makes the valve shut. A valve stem 10 is provided in the center of the underside of the said valve disc 8 and connected with this valve stem by linking arms 12 is a tubular slide valve 11 so devised as to vertically move inside said liner 4. Said tubular slide valve 11 is arranged so as to move vertically and is interlocked with the said valve disc 8. In the case when both the tubular slide valve 11 and the valve disc 8 are elevated, the intake ports 6 may be fully opened, and when both the tubular slide valve 11 and the valve disc 8 are lowered the height and area of the intake ports 6 may be reduced. As is so devised, the stop valve can be shut by further lowering it. Accordingly, the angle-valve of the present invention is so designed that the lower tip of its feet 5 is laid in constant contact with the tank bottom and in the condition when the liquid level in the tank is higher than the upper brim of the intake ports 6, the drive shaft 9 is to be driven upward to elevate the tubular slide valve 11 and the valve disc 8, and the intake ports 6 are kept fully opened. When the liquid is situated higher than the upper brim of the intake ports 6 it can be taken in through said intake ports without augmentation of suction resistance. When the liquid level becomes lower than the upper brim of the intake ports 6 and thus it becomes impossible to provide suction, the drive shaft 9 is to be driven downward, and both said tubular slide valve 11 and the valve disc 8 are lowered to maintain the lower end of the tubular slide valve at the specified small distance above the tank bottom surface and thus the height of the intake ports is reduced and the intake area is made smaller so that the remaining liquid in the tank may be completely taken out. Moreover, when the pipe line of the suction pipes is shut, if need be, such a perfect shut-down can be attained by further lowering the drive shaft 9 and maintaining said valve disc in the position shown by chain lines. By the angle-valve thus described above, the suction of a liquid is able to be carried out and the pipe line can also be shut down by vertically lowering the intake ports substantially, and therefore, the entire quantity of a liquid in the tank may be rapidly and completely taken in by one pipe system while the equipment therefor may be markedly simplified in comparison with the conventional system. In addition to that the opening and closing operation of the stop

valve and tubular slide valve may be carried out by one and the same drive shaft, so that the operation itself is made, all the more, simpler than said conventional ones.

FIG. 2 shows an embodiment of the present invention above described. In the present embodiment, a hopper-shaped wall part **13** is integrally incorporated with said main body thus extending the lower end of the feet **5** that form the intake ports **6** while, further, an expanded bellmouth **14** is connected therewith, thus composing upper and lower intake ports by said intake ports **6** and said bellmouth **4**. The lower end of said bellmouth is positioned so as to maintain a specified distance to the bottom of the tank. In case the liquid level is higher than the upper intake ports, the liquid is taken in through the upper intake ports, and, in case the liquid level is lower than that, thereby making intake through upper ports impossible, said intake ports are shut by the tubular slide valve **11** and the remaining liquid may be thus sucked through the lower intake ports. Accordingly, when the present embodiment is compared with that as shown in FIG. 1, it positively distinguished from the other in that this one has intake ports at two levels, upper and lower, although the present invention is not different substantially from the embodiment in the point of the substantial displacement of the intake ports due to the interlocking vertical movement of the tubular slide valve **11** with the valve disc **8**, and by additional components of the hopper-shaped part **11** and the bellmouth **14** thereto, it is effective in that the sucking power at said part is augmented and thereby the remaining liquid may be discharged completely.

We claim:

1. An angle valve with variable intake ports which comprises a hollow main body having a cylindrical intake port, an outlet port, a liner inside said cylindrical port positioned in close engagement with the inner walls thereof, a plurality of feet protruding from the lower end of said cylindrical port defining a plurality of longitudinal inlet ports therebetween, a valve seat in said body between said inlet and outlet ports, a valve disc in said body adapted to cooperate with said seat to prevent flow therethrough, means connected to one side of said disc for operating the same, a valve stem connected at one end to the other side of said valve disc and extending through said seat toward said liner, a tubular sleeve-like member connected to the other end of said stem and having at least a portion thereof in sliding engagement with said liner at all times, said sleeve-like member being spaced from said disc by said stem a distance such that when said disc is moved toward said seat said sleeve-like member extend across said inlet ports adjacent said feet to thereby change the opening height and area of the inlet ports.

2. An angle valve with variable intake ports which comprises a hollow main body having a cylindrical intake port with a hopper-shaped part and bellmouth formed at one end, an outlet port, a plurality of inlet ports in said cylindrical intake port between said body and hopper-shaped part, a liner inside said cylindrical port positioned in close engagement with the inner walls thereof, a valve seat in said body between said intake and outlet ports, a valve disc in said body adapted to cooperate with said seat to prevent flow therethrough, means connected to one side of said disc for operating the same, a valve stem connected at one end to the other side of said valve disc and extending through said seat toward said liner, a tubular sleeve-like member connected to the other end of said stem and having at least a portion thereof in sliding engagement with said liner at all times, said sleeve-like member being spaced from said disc by said stem a distance such that when said disc is moved toward said seat said sleeve-like member extends across said inlet parts to thereby change the opening height and area of the inlet ports.

References Cited by the Examiner

UNITED STATES PATENTS

326,904	9/1885	Granger	137—590 X
1,321,513	11/1919	Eaton	137—577
2,080,706	5/1937	Glab	137—607 X
2,638,222	5/1953	Roach	137—590 X

WILLIAM F. O'DEA, *Primary Examiner.*

D. H. LAMBERT, *Assistant Examiner.*