July 2, 1946. G. C. ANDERSON 2,403,324

ADJUSTABLE SADDLE CLEANING HORSE

Filed April 19, 1945 3 Sheets-Sheet 1

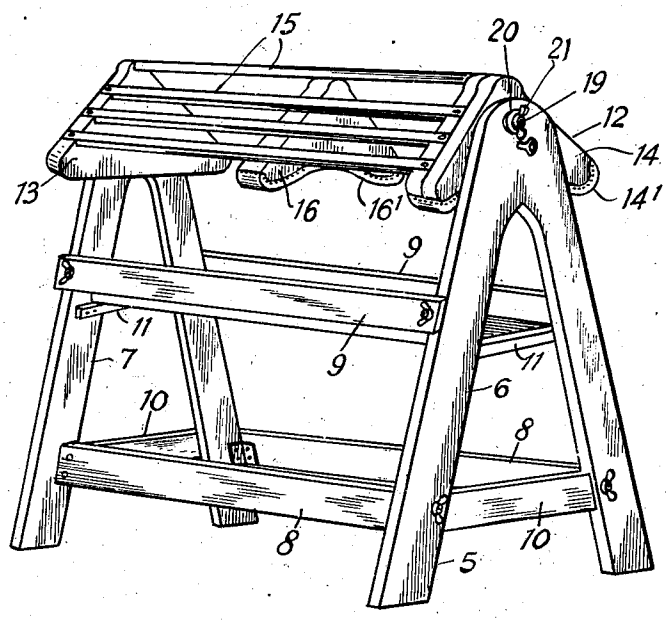

Fig. 1

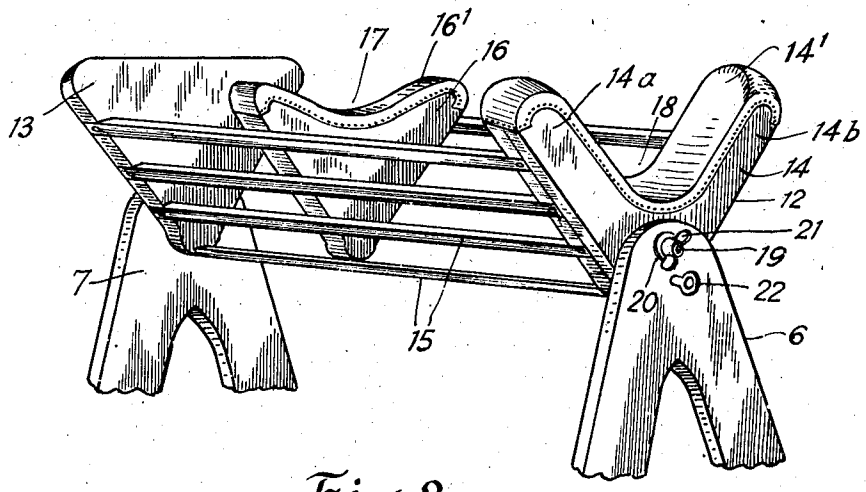

Fig. 2

INVENTOR
George C. Anderson
BY
Carl Miller
ATTORNEY

July 2, 1946. G. C. ANDERSON 2,403,324

ADJUSTABLE SADDLE CLEANING HORSE

Filed April 19, 1945 3 Sheets-Sheet 2

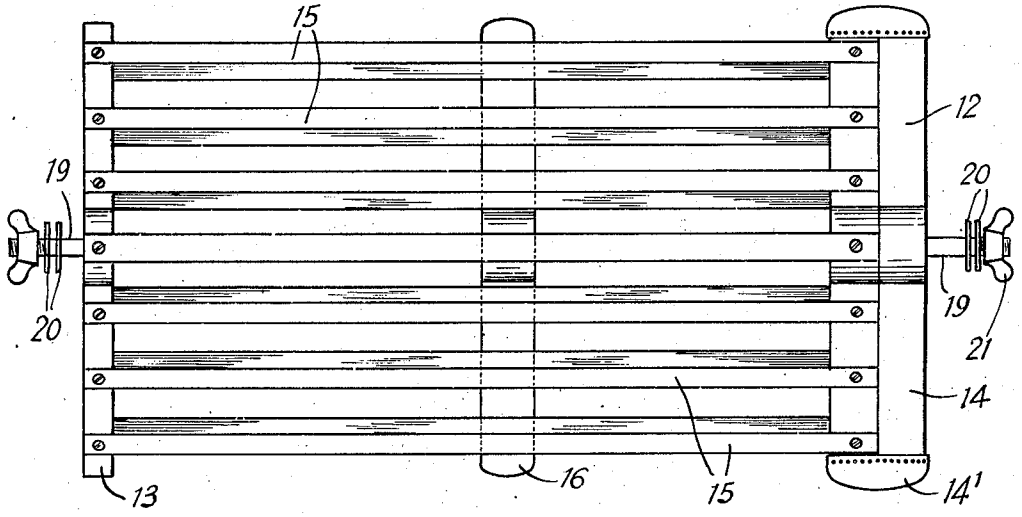

Fig. 4

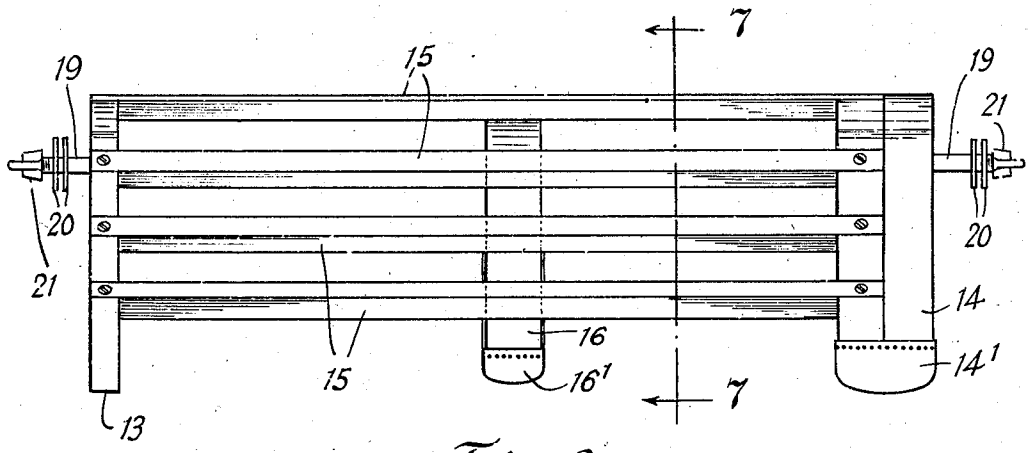

Fig. 3

INVENTOR
George C. Anderson
BY
Carl Miller
ATTORNEY

July 2, 1946. G. C. ANDERSON 2,403,324

ADJUSTABLE SADDLE CLEANING HORSE

Filed April 19, 1945 3 Sheets-Sheet 3

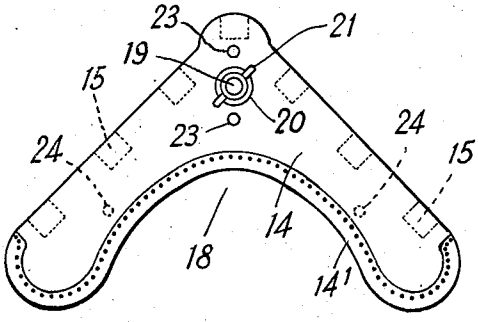

Fig. 5

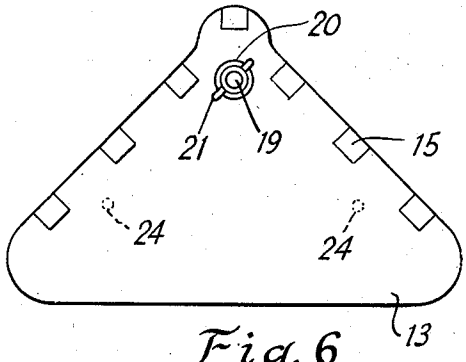

Fig. 6

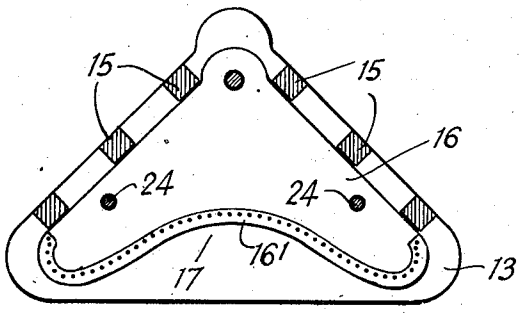

Fig. 7

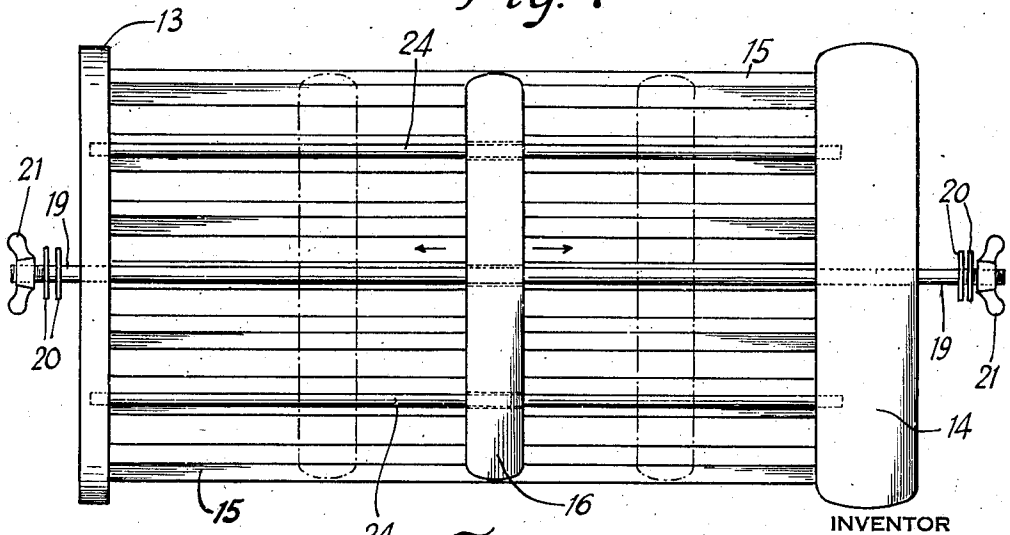

Fig. 8

INVENTOR
George C. Anderson
BY
Carl Miller
ATTORNEY

Patented July 2, 1946 2,403,324

UNITED STATES PATENT OFFICE

2,403,324

ADJUSTABLE SADDLE CLEANING HORSE

George C. Anderson, Great Neck, N. Y.

Application April 19, 1945, Serial No. 589,141

6 Claims. (Cl. 69—19)

1

This invention relates to an improved horse or work stand for cleaning riding saddles, and one of its objects is to provide a horse or work stand with a saddle supporting device, which is constructed with one side to engage the inner side of the saddle, so that the upper side of the saddle will be exposed and may be properly cleaned, and which is constructed with another side, which forms a trough-like support for the upper side of the saddle, when the saddle is inverted on the device, whereby the underside of the saddle will be exposed above the device, for thorough clean- and complete inspection.

Another object of the invention is to provide a work stand or horse with a top work support, which is constructed to permit a saddle to be positioned thereon in straddling relation thereto, and which may be reversed, so that the upper side of the saddle may be nested on the work support, and will in each position provide a rigid mount for the saddle, so that both sides of the saddle may be quickly and thoroughly cleaned.

With the above and other objects in view, the invention relates to certain new and useful combinations, constructions and arrangements of parts, clearly described in the following specification, and fully illustrated in the accompanying drawings, in which:

Fig. 1 is a perspective view, showing the work support arranged to support a saddle with the outer side of the saddle uppermost.

Fig. 2 is a fragmentary perspective view, showing the work support inverted, to provide a nest to receive the upper side of the saddle, whereby the underside of the saddle will be exposed above the support.

Fig. 3 is side elevation of the work support or head of the work stand or horse.

Fig. 4 is a top plan view thereof.

Fig. 5 is an end elevation of the work support or head of the horse or work stand, showing one end thereof.

Fig. 6 is a view in elevation of the opposite end of the work support.

Fig. 7 is a transverse sectional view, taken on line 7—7 of Fig. 3, looking in the direction of the arrows.

Fig. 8 is a bottom plan view of the work support.

Referring to the accompanying drawings, which illustrate the practical embodiment of my invention, 5 designates the base of the improved work stand or work horse, which includes the end V-shape frame members 6 and 7, the longitudinal connecting side bars 8 and 9, on each side thereof,

2

and the end cross bars 10 and 11, at each end thereof.

The upper ends of the V-shaped end frames 6 and 7 receive the work head or supporting device 12. This work head or supporting device includes the end members 13 and 14, and the parallel connecting bars 15. The end member 13 is of approximately triangular shape, and the end member 14 is constructed like a wide V form, thereby providing diverging arms 14a and 14b, which are covered or faced with leather or other cushioning material 14'.

Between the end members 13 and 14 an intermediate member 16 is arranged, which slides back or forward so as to fit any size saddle and which is of general triangular shape, but provided with a relatively shallow groove 17 on one side thereof. The groove 17 and the gap 18 between the diverging arms 14a and 14b provide a nest for receiving the upper side of the saddle, when the work head is disposed in the position shown in Fig. 2.

The upper side of the head 12, is composed of the longitudinal connecting bars 15, and the oppositely inclined upper edges of the end members 13 and 14 and the intermediate member 16. Upon this frame work the saddle may be mounted, in straddling relation to the head 12, with the upper face of the saddle supported above the head.

The work head 12 is supported between the upper ends of the end frames 6 and 7, by means of the rod or shaft 19, the outer ends of which extend through the end walls or members 13 and 14 and through the upper ends of the end frames 6 and 7, thereby providing a pivotal bearing for the work head 12 upon the stationary end frames 6 and 7. Each end of the rod or shaft 19 is equipped with washers 20, to engage opposite sides of each end frame engaged, and on the outer ends of the rod or shaft wing nuts 21 are threaded, so as to clamp the upper ends of the end frames 6 and 7 against the end walls or members 13 and 14.

The work head is locked in place on the end frames 6 and 7 by means of the bolt 22, which slides through the end frame 7 and engages either one of two openings or holes 23 formed in the end member or wall 14. The work head is reinforced by parallel metal rods 24 which extend through the intermediate member 16 and into the end members 13 and 14.

In the position shown in Fig. 1, the pin or bolt 22 will engage the opening or hole 23 nearest the gap 18, thereby locking the work head so that the saddle may be placed on the work head, with

its upper side disposed above the work head for inspection and cleaning. In the position shown in Fig. 2 the bolt **22** will engage the hole or opening **23** nearest the narrow side of the end member **14**, thereby locking the work head so that the gap **18** and the shallow groove **17** will provide a nest to receive the upper side of the saddle, so that the underside of the saddle will be exposed for inspection and cleaning above the work head.

The grooved side of the intermediate member **16** is provided with a leather or cushion facing **16'**, to protect the finished surface of the upper side of the saddle against injury.

With my improved work horse or stand, a complete job of cleaning both sides of a riding saddle may be accomplished in a short time. When the saddle is mounted on the work head, with the upper side of the saddle exposed for inspection and cleaning, a rigid support is provided for the saddle, and all necessary brushing and cleaning operations may be quickly performed.

When the underside of the saddle is to be cleaned, the work head may be quickly inverted, and a nest is provided for the upper side of the saddle, which will prevent the saddle from sliding from the work stand. In this way the accumulation of sweat and dirt on the bottom face of the saddle may be entirely and quickly removed.

It is understood that the parts of the improved work stand may be constructed of any available materials, and that various changes may be made in the details of construction, their arrangement and combination, within the scope of the invention, as defined by the claims hereof.

Having described my invention, I claim as new:

1. A work stand for cleaning riding saddles, comprising a base, and a saddle supporting head pivotally mounted on the base and provided with an upper side having downwardly and oppositely inclined sides on which the saddle may be placed astride the head and provided with a nest on the opposite side to receive the upper side of the saddle when the head is reversed on the base.

2. A work stand for cleaning riding saddles, comprising a base provided with end frames, a saddle supporting head positioned between the end frames and provided with a longitudinal saddle receiving nest on one side and downwardly inclined sides on the opposite side, and means for pivotally supporting the head on the end frames so that either side of the head may be disposed upwardly of the end frames.

3. A work stand for cleaning hiding saddles, comprising a base having end frames, a rod extending through the end frames, a head having members forming a saddle nest on one side thereof pivotally mounted on the rod, and means for locking the head on the end frames so that the nest may be positioned upwardly or the other side of the head may be positioned upwardly.

4. A work stand for cleaning riding saddles, consisting of a pair of V-shaped end frames connected rigidly to each other, a rod extending through the end frames, a head having end members and connecting parallel side bars pivotally supported by said end members on the rod, means for clamping the ends of the rod against the end frames, said head having one side on which a saddle may be mounted astride the head and an opposite side having a nest to receive the upper side of the saddle.

5. A work stand for cleaning riding saddles, consisting of a reversible work head having end members, a rod extending through the end members, a stand pivotally supporting the ends of the rod, reinforcing rods extending into the end members, parallel side bars connecting the end members to each other, and means for locking the head against pivotal movement on the stand.

6. A work stand for cleaning riding saddles, comprising a base having end frames rigidly connected to each other, a work supporting head having oppositely inclined sides disposed between the end frames, a rod extending through the end frames and through the work head, means for clamping the ends of the rod on the end frames, the work supporting head having a nest on one side to receive the upper side of the riding saddle, and a locking pin sliding through one of the end frames to engage one of several openings in the head for locking the head in different positions against pivotal movement on the end frames.

GEORGE C. ANDERSON.