US00D902401S

(12) United States Design Patent

Ohno

(10) Patent No.: US D902,401 S
(45) Date of Patent: ** Nov. 17, 2020

(54) **OPERATING GRIP FOR ENDOSCOPE**

(71) Applicant: **FUJIFILM Corporation**, Tokyo (JP)

(72) Inventor: **Hirotoshi Ohno**, Ashigarakami-gun (JP)

(73) Assignee: **FUJIFILM Corporation**, Tokyo (JP)

(**) Term: **15 Years**

(21) Appl. No.: **29/642,312**

(22) Filed: **Mar. 28, 2018**

(30) **Foreign Application Priority Data**

Sep. 29, 2017 (JP) 2017-021499

(51) **LOC (12) Cl.** **24-02**
(52) **U.S. Cl.**
USPC **D24/138**
(58) **Field of Classification Search**
USPC D24/137, 138
CPC A61B 1/2676
See application file for complete search history.

(56) **References Cited**

U.S. PATENT DOCUMENTS

D481,124 S * 10/2003 Hayamizu D24/138
D535,393 S * 1/2007 Pilvisto D16/202
D753,298 S * 4/2016 Hayamizu D24/138
D753,823 S * 4/2016 Hayamizu D24/138
D845,470 S * 4/2019 Ohno D24/127
D871,574 S * 12/2019 Lohk D24/138
D871,575 S * 12/2019 Lohk D24/138
D871,576 S * 12/2019 Lohk D24/138
D873,413 S * 1/2020 Ohno D24/127
D884,168 S * 5/2020 Lohk D24/138
D886,999 S * 6/2020 Lohk D24/138
D888,237 S * 6/2020 Lohk D24/138

* cited by examiner

Primary Examiner — Eliza Z Bennett-Hattan
(74) *Attorney, Agent, or Firm* — Birch, Stewart, Kolasch & Birch, LLP

(57) **CLAIM**

The ornamental design for an operating grip for endoscope, as shown and described.

DESCRIPTION

FIG. **1** is a top, front and left side perspective view of an operating grip for endoscope showing my new design;
FIG. **2** is a top, rear and left side perspective view thereof;
FIG. **3** is a top, front and right side perspective view thereof;
FIG. **4** is a bottom, front and left side perspective view thereof;
FIG. **5** is a front elevational view thereof;
FIG. **6** is a rear elevational view thereof;
FIG. **7** is a top plan view thereof;
FIG. **8** is a bottom plan view thereof;
FIG. **9** is a left side elevational view thereof; and,
FIG. **10** is a right side elevational view thereof.
The broken lines showing the portions of the operating grip for endoscope in all views shown represent unclaimed subject matter and form no part of the claimed design.
The dash-dot broken lines in FIGS. **1-3**,**5-7**,**10** represent the boundary lines and form no part of the claimed design.

1 Claim, 10 Drawing Sheets

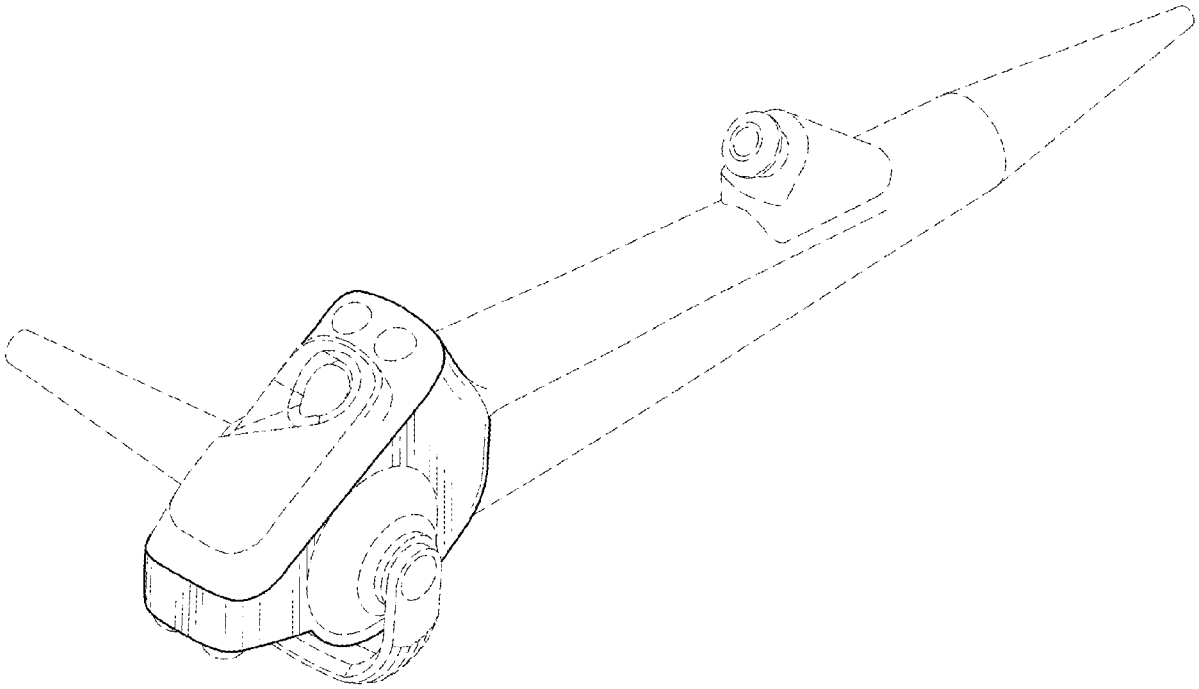

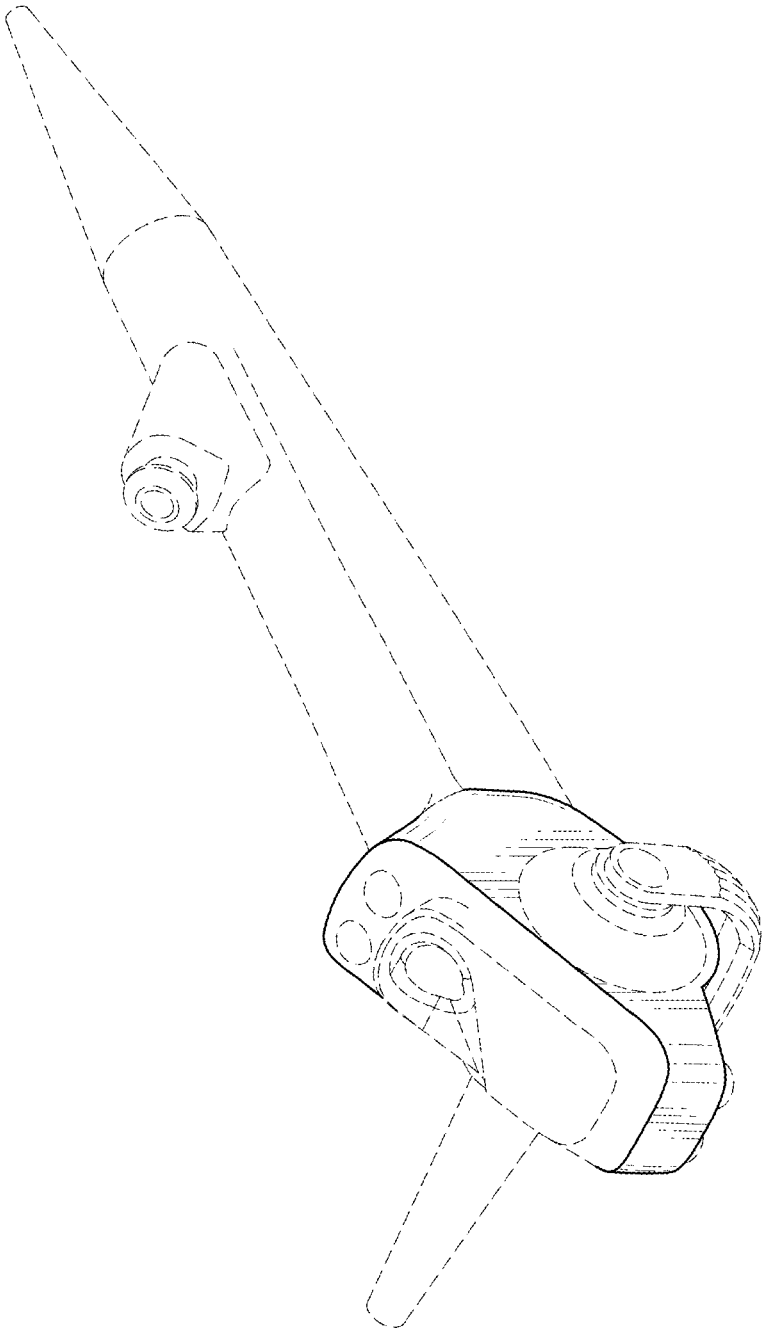

FIG.1

FIG.2

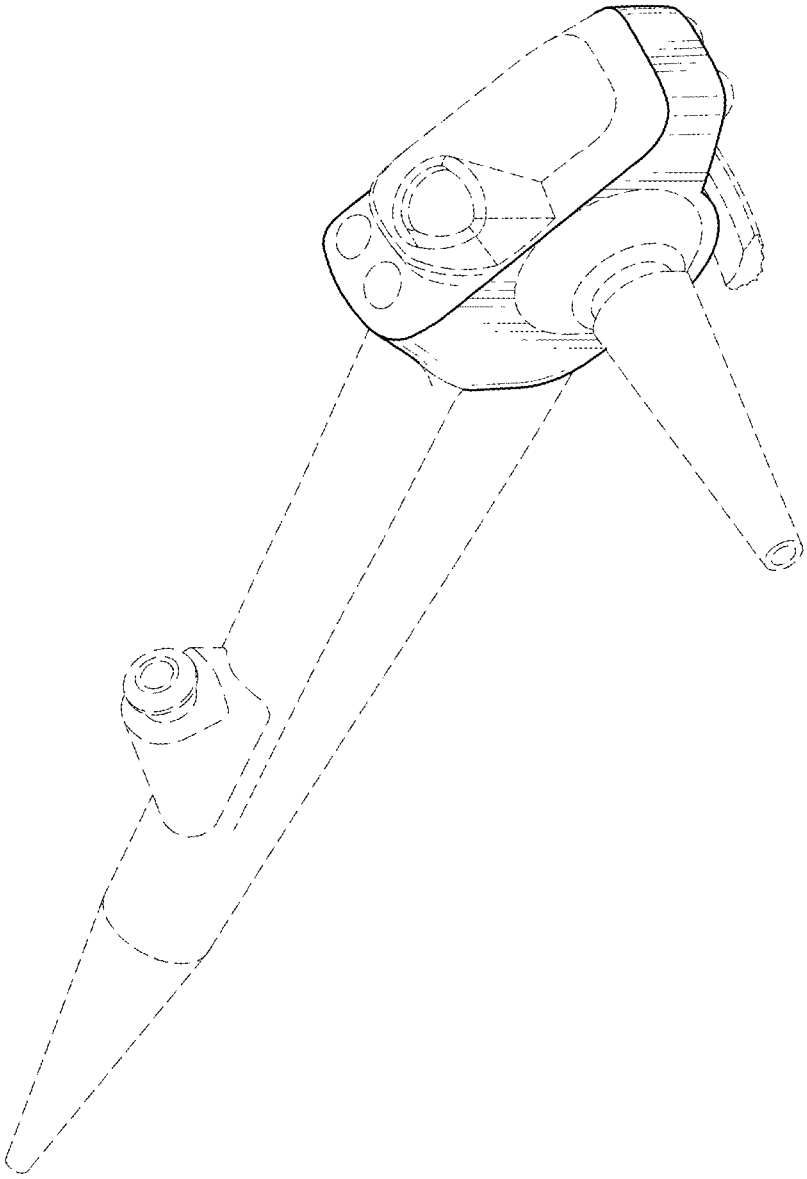

FIG.3

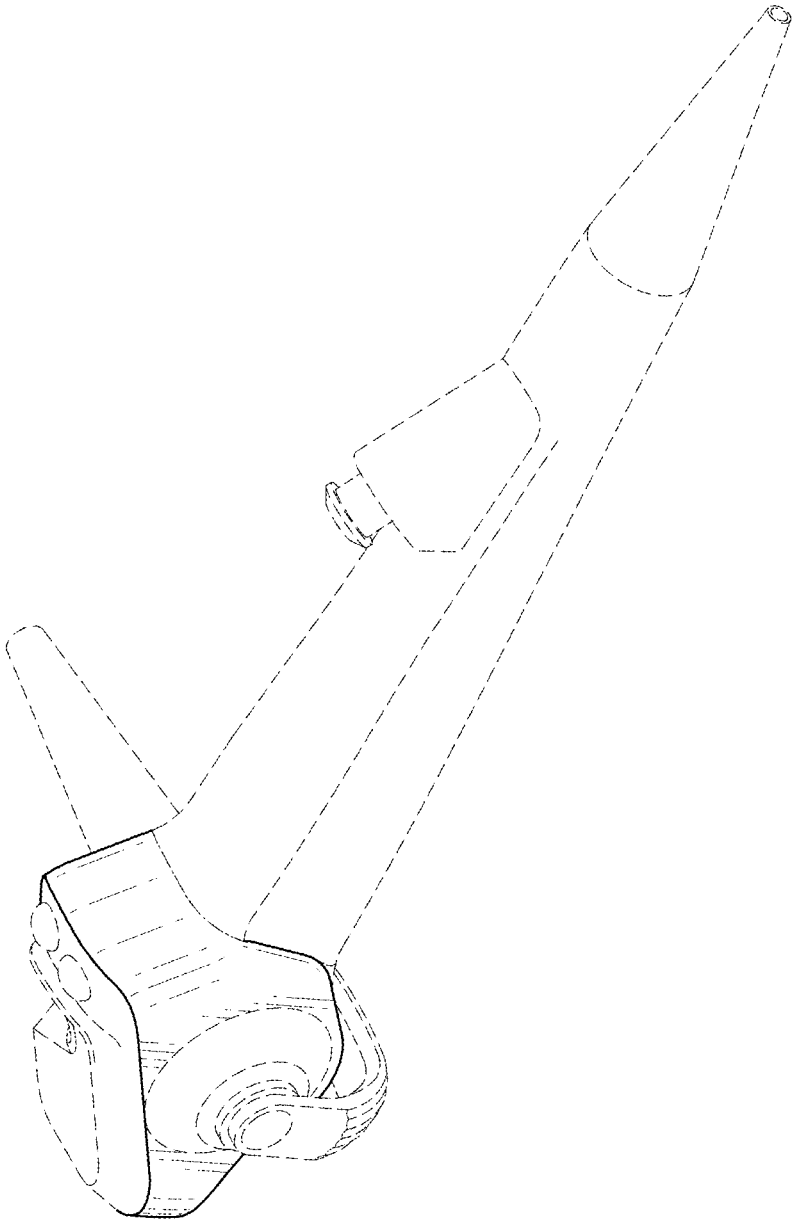

FIG.4

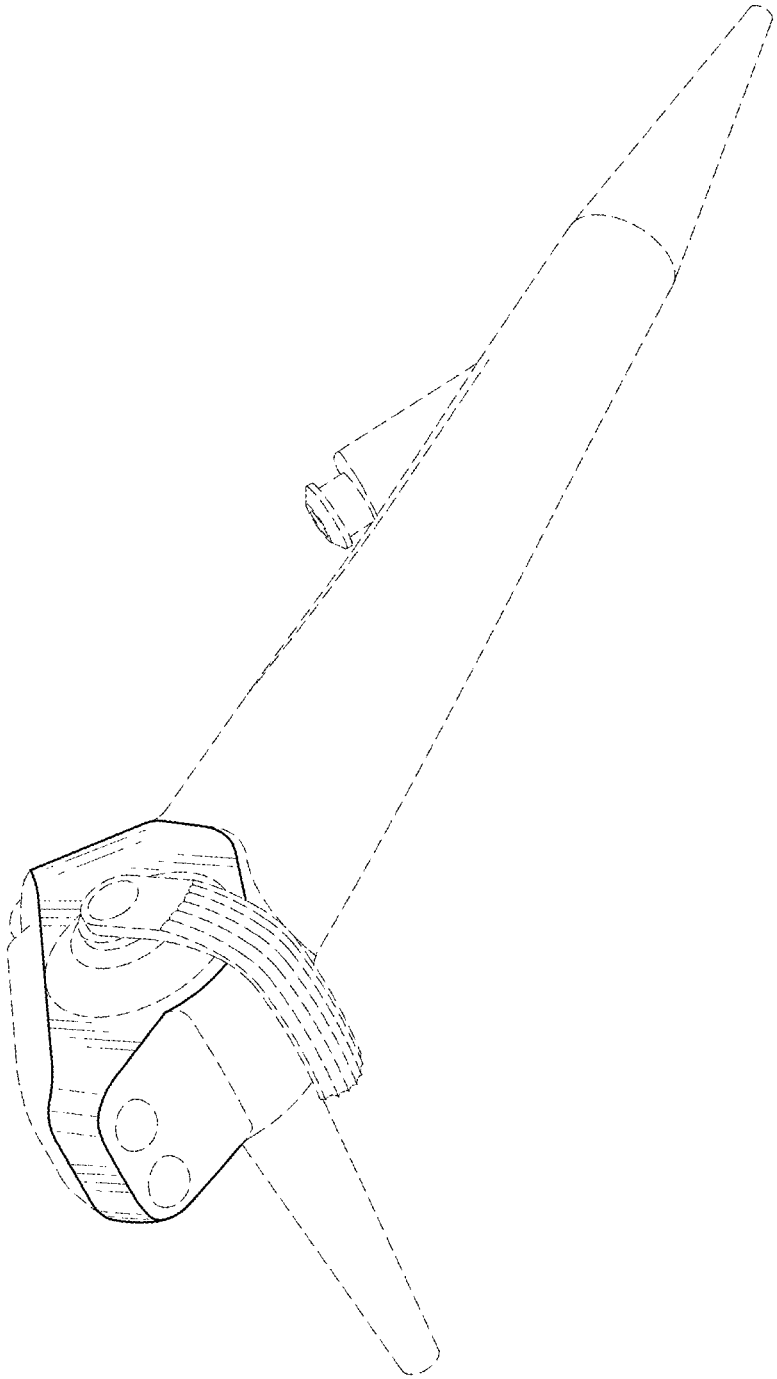

FIG.5

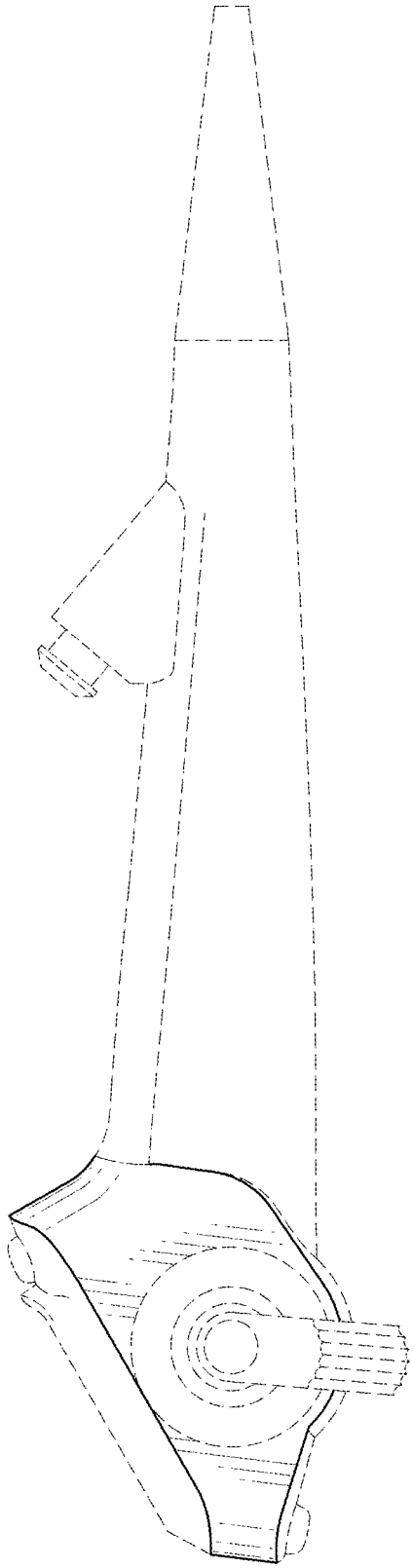

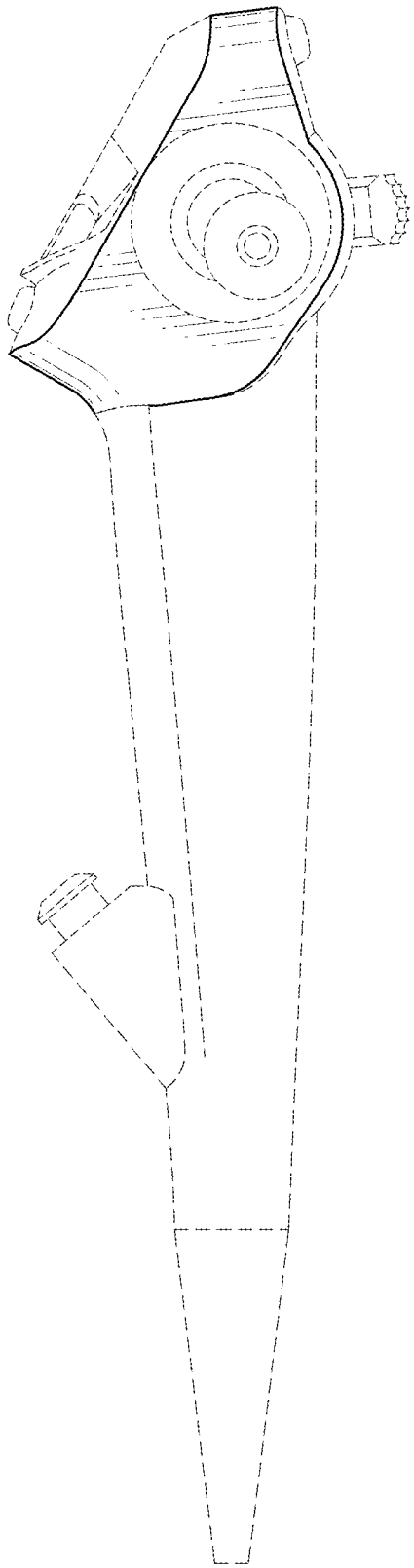

FIG.6

FIG.7

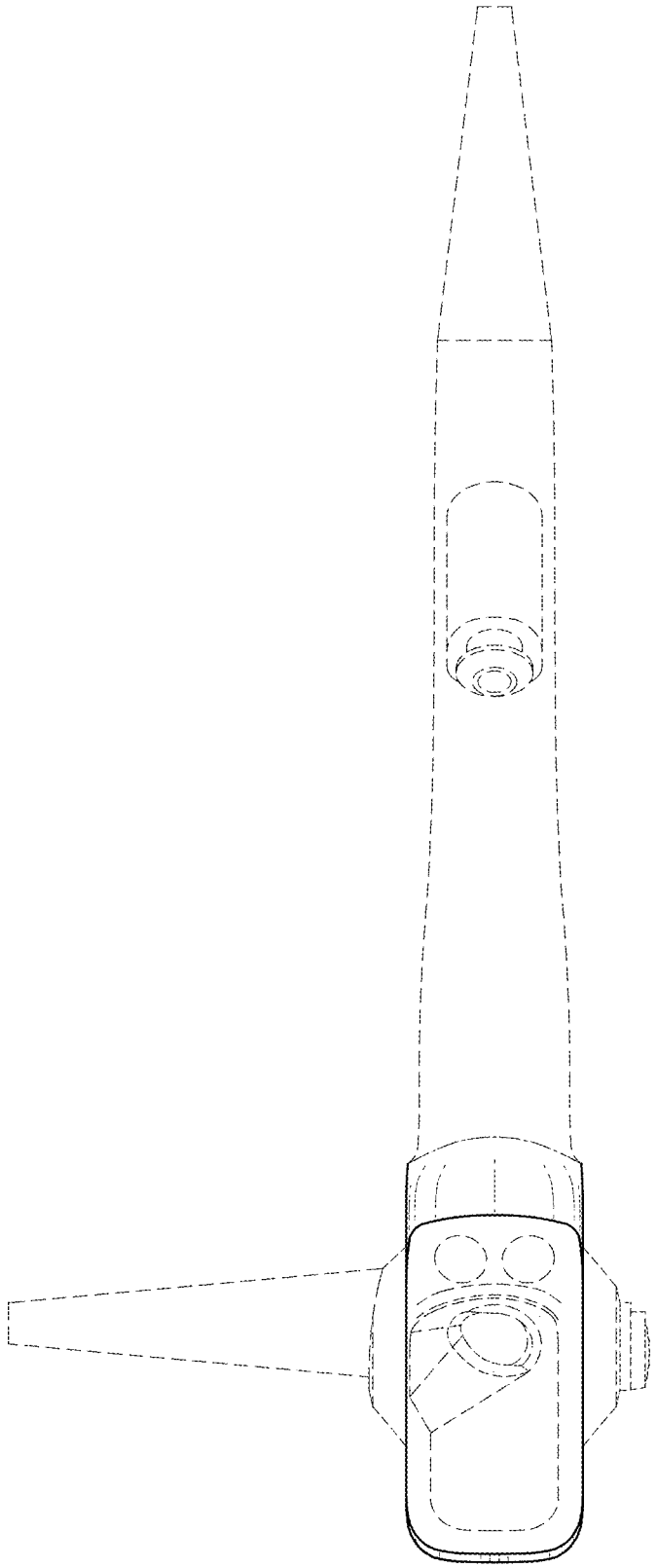

FIG.8

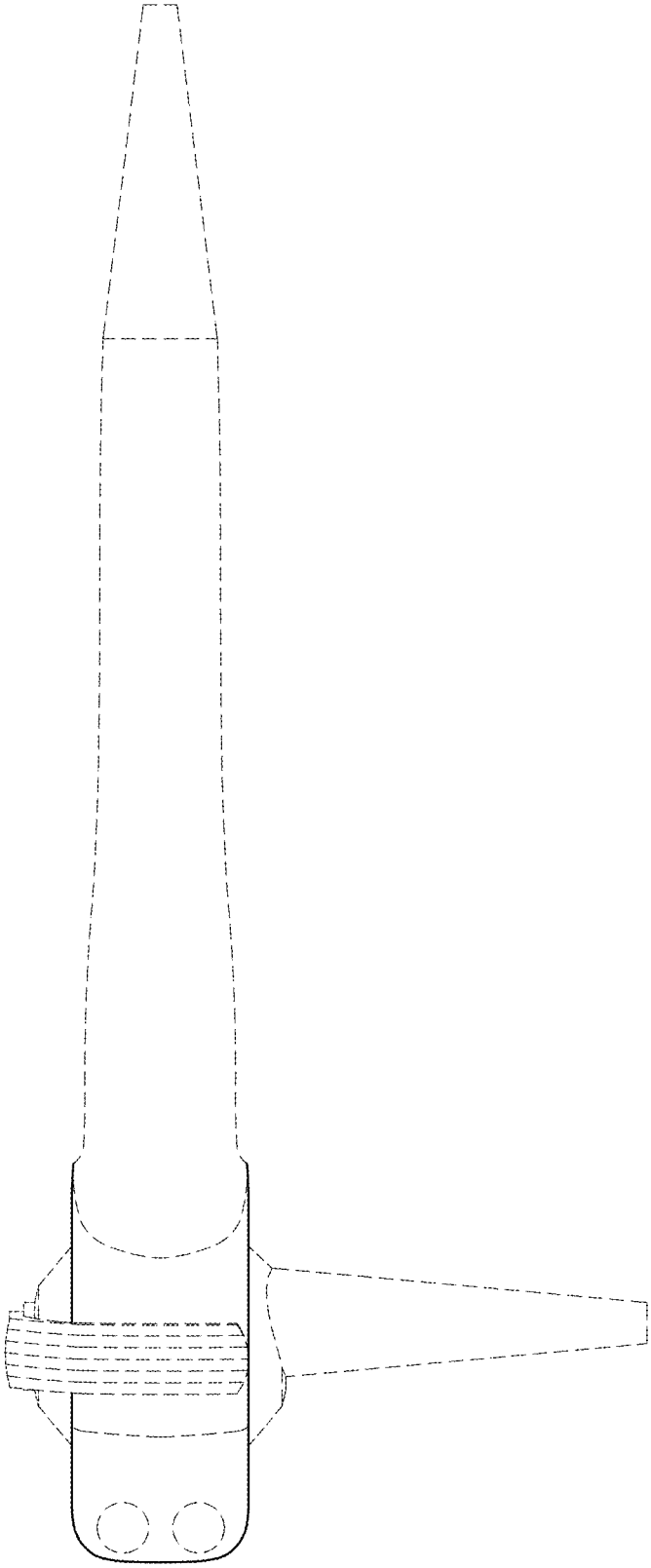

FIG.9

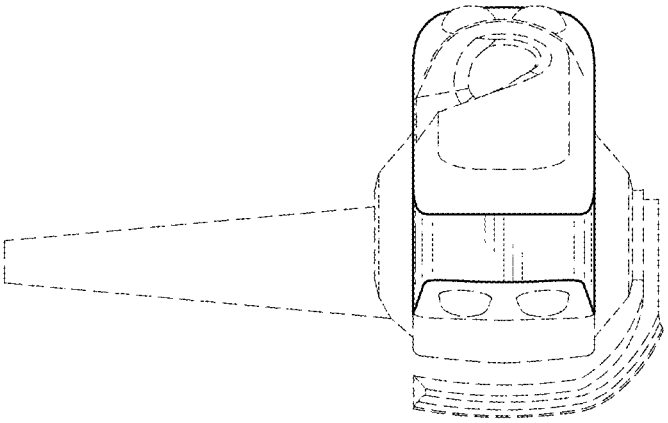
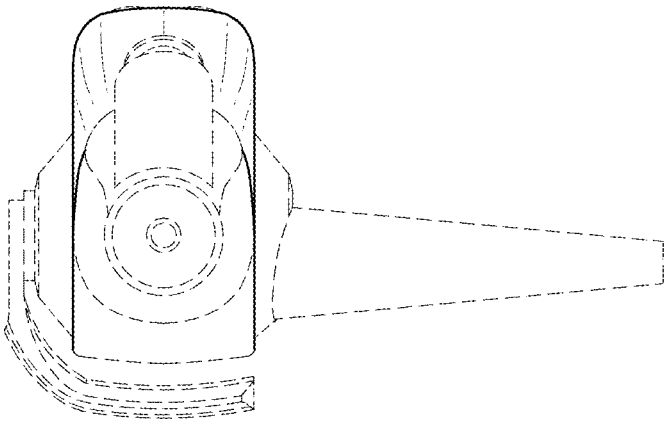
FIG.10