(12) INTERNATIONAL APPLICATION PUBLISHED UNDER THE PATENT COOPERATION TREATY (PCT)

(19) World Intellectual Property Organization
International Bureau

(43) International Publication Date
8 November 2012 (08.11.2012)

WIPO | PCT

(10) International Publication Number
WO 2012/150109 A1

(51) International Patent Classification:
B29C 69/02 (2006.01) *B29C 51/08* (2006.01)
B29C 61/02 (2006.01)

(21) International Application Number:
PCT/EP2012/056529

(22) International Filing Date:
11 April 2012 (11.04.2012)

(25) Filing Language: English

(26) Publication Language: English

(30) Priority Data:
11164540.4 3 May 2011 (03.05.2011) EP

(71) Applicant *(for AE, AG, AU, BB, BH, BW, BZ, CA, CY, EG, GB, GD, GH, GM, IE, IL, KE, KN, LC, LK, LS, MT, MW, MY, NA, NG, NZ, OM, PG, QA, RW, SC, SD, SG, SL, SZ, TT, TZ, UG, VC, ZA, ZM, ZW only)*: **UNILEVER PLC** [GB/GB]; a company registered in England and Wales under company no. 41424 of Unilever House, 100 Victoria Embankment, London Greater London EC4Y 0DY (GB).

(71) Applicant *(for all designated States except AE, AG, AU, BB, BH, BW, BZ, CA, CY, EG, GB, GD, GH, GM, IE, IL, IN, KE, KN, LC, LK, LS, MT, MW, MY, NA, NG, NZ, OM, PG, QA, RW, SC, SD, SG, SL, SZ, TT, TZ, UG, US, VC, ZA, ZM, ZW)*: **UNILEVER N.V.** [NL/NL]; Weena 455, NL-3013 AL Rotterdam (NL).

(71) Applicant *(for IN only)*: **HINDUSTAN UNILEVER LIMITED** [IN/IN]; Unilever House, B.D. Sawant Marg Chakala Andheri (East), Mumbai, Maharashtra 400 099 (IN).

(72) Inventor; and
(75) Inventor/Applicant *(for US only)*: **WOODWARD, Adrian, Michael** [GB/GB]; 31 Daisy Avenue, Bury St Edmonds Suffolk IP32 7PG (GB).

(74) Agent: **CLARKE, Christopher, John**; Unilever PLC, Unilever Patent Group, Colworth House, Sharnbrook, Bedford Bedfordshire MK44 1LQ (GB).

(81) Designated States *(unless otherwise indicated, for every kind of national protection available)*: AE, AG, AL, AM, AO, AT, AU, AZ, BA, BB, BG, BH, BR, BW, BY, BZ, CA, CH, CL, CN, CO, CR, CU, CZ, DE, DK, DM, DO, DZ, EC, EE, EG, ES, FI, GB, GD, GE, GH, GM, GT, HN, HR, HU, ID, IL, IN, IS, JP, KE, KG, KM, KN, KP, KR, KZ, LA, LC, LK, LR, LS, LT, LU, LY, MA, MD, ME, MG, MK, MN, MW, MX, MY, MZ, NA, NG, NI, NO, NZ, OM, PE, PG, PH, PL, PT, QA, RO, RS, RU, RW, SC, SD, SE, SG, SK, SL, SM, ST, SV, SY, TH, TJ, TM, TN, TR, TT, TZ, UA, UG, US, UZ, VC, VN, ZA, ZM, ZW.

(84) Designated States *(unless otherwise indicated, for every kind of regional protection available)*: ARIPO (BW, GH, GM, KE, LR, LS, MW, MZ, NA, RW, SD, SL, SZ, TZ, UG, ZM, ZW), Eurasian (AM, AZ, BY, KG, KZ, MD, RU, TJ, TM), European (AL, AT, BE, BG, CH, CY, CZ, DE, DK, EE, ES, FI, FR, GB, GR, HR, HU, IE, IS, IT, LT, LU, LV, MC, MK, MT, NL, NO, PL, PT, RO, RS, SE, SI, SK,

[Continued on next page]

(54) Title: PROCESS FOR PRODUCING FORMED THERMOPLASTIC

Fig.3.

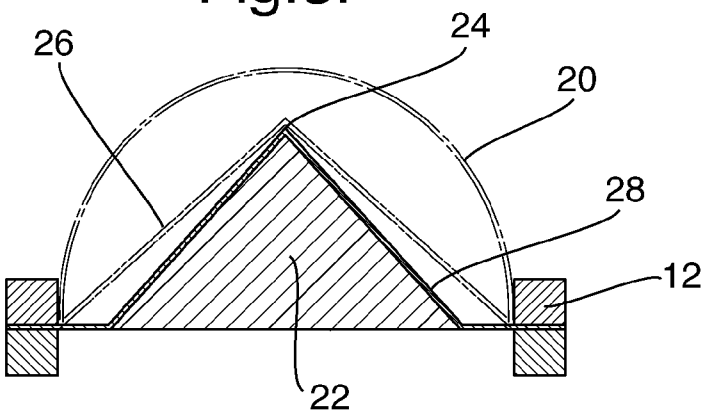

(57) Abstract: A process for forming a sheet of thermoplastic material into a three-dimensional shape comprising at least one vertex, the process comprising the steps of (i) forming the sheet by means of a former having a profile such as to produce a first formed shape in the sheet, followed by (ii) positioning a male former within the first formed shape, the male former having a profile within the first formed shape comprising at least one vertex and (iii) raising the temperature of the first formed shape above that of forming in step (i), thereby causing the first formed shape to shrink back towards its original sheet form and thereby adopting the profile of the male former.

WO 2012/150109 A1

SM, TR), OAPI (BF, BJ, CF, CG, CI, CM, GA, GN, GQ, GW, ML, MR, NE, SN, TD, TG).

Published:

— *with international search report (Art. 21(3))*

— *before the expiration of the time limit for amending the claims and to be republished in the event of receipt of amendments (Rule 48.2(h))*

Process for Producing Formed Thermoplastic

Technical field of the Invention

The present invention relates to the manufacture of formed thermoplastic, in particular to form infusion packets such as tea bags having a pre-determined three-dimensional shape, and in particular, shapes having sharp features.

Background to the Invention

For many years infusion packets, such as tea bags were available primarily as square or round two-ply sheets of porous filter material, typically made of paper, with the infusible material, such as tea, sandwiched between the sheets. Such packets restrict the flow of infusible material within the packet substantially to two dimensions. As a result the infusion performance of such packets is limited.

Thus the past few decades have seen the development of mass-produced infusion packets which have a more three-dimensional shape and which allow the infusible substance more room to move. Of particular success have been the tetrahedral-shaped packets such as those described in the international patent applications published as WO 95/01907 (Unilever) and WO 2004/033303 (I.M.A. SPA).

In the manufacture of tetrahedral packets, the tetrahedral shape is conventionally formed by making mutually perpendicular transverse seals in a tube of filter material and apparatus designed for such manufacture is ill-suited to the manufacture of other three-dimensional shapes.

Therefore, it would be desirable to develop a process which can manufacture a variety of three-dimensional shapes, particularly shapes comprising sharp features, typified by a vertex, e.g. as provided by a tetrahedral shape.

Definitions

It should be noted that in specifying any range of values, any particular upper value can be associated with any particular lower value.

For the avoidance of doubt, the word “comprising” is intended to mean “including” but not necessarily “consisting of” or “composed of”. In other words, the listed steps or options need not be exhaustive.

The disclosure of the invention as found herein is to be considered to cover all embodiments as found in the claims as being multiply dependent upon each other irrespective of the fact that claims may be found without multiple dependency or redundancy.

Summary of the Invention

The inventors have realised that known thermoforming processes, whilst capable of generating a variety of three-dimensional shapes, are not suitable for use with infusion packet material, particularly when the shapes comprise sharp features.

Firstly, infusion packets are most commonly made of paper, which is not thermoformable. Secondly, even if they were made from a thermoformable material, they would be inappropriate for thermoforming due to their porosity and thinness of the material.

Known thermoforming processes involve a first step of heating the material followed by a second step of thermoforming the material. The very small heat capacity of infusion packet material means that any heating will quickly be lost and so this approach will not work.

Even if a way of solving the heating problem could be found, substantial difficulties would remain. For example, known thermoforming techniques typically involve the use of air pressure to form the material. However, the porosity of infusion packet material makes this approach impractical, as any difference in air pressure across the material will quickly equalise.

If air pressure is not used, and a mould were pressed into the material then unacceptably high stresses would be induced in the material, particularly around any sharp features of the mould, causing failure of the material.

Thus, it would seem that thermoforming is not a practical method of generating three-dimensional shapes from infusion packet material comprises sharp features.

However, surprisingly the present inventors have overcome these barriers and developed a forming process that can produce three-dimensional shapes having sharp features which are capable of being formed from infusion packet material.

Accordingly, the invention relates to a process for forming a sheet of thermoplastic material into a three-dimensional shape comprising at least one vertex, the process comprising the steps of:

(i) forming the sheet by means of a former having a profile such as to produce a first formed shape in the sheet, followed by

(ii) positioning a male former within the first formed shape, the male former having a profile within the first formed shape comprising at least one vertex and

(iii) raising the temperature of the first formed shape above that of forming in step (i), thereby causing the first formed shape to shrink back towards its original sheet form and thereby adopting the profile of the male former.

The process thus involves forming the thermoplastic material into a first formed shape which is larger than the eventual formed shape. Furthermore the first formed shape contains no sharp features so that the stresses induced in the material during forming are evenly spread throughout the material. Once formed, the first formed shape is caused to shrink-back onto a male former having sharp features, thus generating a formed shape having sharp features.

The stresses induced around the sharp features, although not completely removed, are greatly less than those that would be encountered if the material were thermoformed directly by the male former having sharp features.

Thus, even very thin and porous material can be formed into three-dimensional shapes having sharp features, according to the process of the present invention.

Therefore, preferably the thermoplastic material has an average thickness of less than 1.0 mm, preferably less than 0.50 mm, more preferably less than 0.2 mm, most preferably from 0.01 to 0.1 mm.

Also, preferably the thermoplastic material is gas permeable. For example, it may comprise filaments of thermoplastic material in a fabric form.

The male former comprises a vertex in its profile, which is a point, peak or pinnacle formed by the confluence of one or more faces of the profile and is effectively zero dimensional in geometric terms. However it may be appreciated that in practice the

vertex may extend over a small area, e.g. a millimetre or two, and may comprise a small degree of rounding. An edge, which extends over a length and is one dimensional and formed from the confluence of two sides, does not constitute a vertex.

The vertex may for example be the pinnacle of a conical form, where the vertex is formed by only one face or side. Equally the vertex could be the pinnacle of three or more sides, for example a corner of a cuboid or a pinnacle of a pyramidal profile.

The male former may comprise a plurality of vertices in its profile, according to whichever shape is desired.

The first step of forming the sheet of thermoplastic material may be carried out by any known forming process known in the art. However, preferably the first formed shape is formed by a male former, so that the first formed shape adopts the profile of the male former. However, any male former employed in the first step typically has a profile without any edges or vertices where it comes into contact with the thermoplastic material. As discussed above, this is to reduce stress in the material during initial forming.

The heat treatment step can be carried out in a wide variety of ways, however a preferred method of heating the thermoplastic material is to direct a heated gas stream onto the thermoplastic material. This is particularly effective if the material is porous and relatively thin, as the low heat capacity of the material results in a short heating time.

The temperature of the thermoplastic material in the third step is greater than that in the first forming step and is preferably greater than 100°C, more preferably greater than 120°C, most preferably from 130 to 200°C. As discussed above, this can be achieved at least by directing gas at a temperature in excess of these levels.

The thermoplastic material can be made form a wide variety of materials, however polyethylene terephthalate (PET) and poly lactic acid (PLA) are preferred.

The process according to the present invention is capable of generating three-dimensional shapes which can then be used as infusion packet material. For example, shapes such as tetrahedral, pyramidal, parallelepipeds, prisms, cones and the like are possible. However pyramidal and/or tetrahedral shapes are preferred.

Thus, the process is generally followed by the step of depositing a particulate product, typically comprising infusible entities such as tea leaves, into the formed thermoplastic material. This step is then typically followed by sealing the formed material to produce a sealed porous infusion packet.

The invention will now be illustrated by way of example and with reference to the following figures, in which:

Figure 1 is a side view of apparatus for use in a process according to the invention.

Figure 2 is another side view of apparatus for use in a process according to the invention.

Figure 3 is a schematic representation of a mould and formed thermoplastic according to the present invention.

Figures 4a to 4c are images of a thermoplastic material being formed by a process according to the present invention.

Figure 5 is an image of a formed thermoplastic shape made by a process according to the invention.

Turning to the figures, figure 1 shows a sheet of porous poly lactic acid 10 having a thickness of 50 μm and held between clamps 12. A male former 14 is positioned above the sheet 10 and is heated to a temperature of 100°C. The male former 14 has no vertices or sharp features and is hemispherical in shape.

The male former 14 is moved towards the sheet 10 and contacts the sheet 10. Due to the small amount of material in the sheet 10, it rapidly rises in temperature approaching 100°C at the region of contact with the male former 14. Thus no pre heat treatment of the sheet 10 is necessary for thermoforming.

The male former 14 continues to move towards the sheet 10 until it is in the position shown in figure 2. At this point the sheet 10 has been formed into a first formed hemispherical shape 20.

Once the first formed shape 20 has been formed, male former 14 is withdrawn and is replaced with a male former 22. The male former 22 is tetrahedral in shape with a vertex 24 formed by three sides (only one shown). The male former 22 is smaller than the first formed shape 20 and fits inside it without contact.

The first formed shape 20 is then heated by passing heated air over it at a temperature of 140°C. This has the effect of causing the first formed shape 22 to shrink back towards its original shape 10. However, in view of the placement of the male former 22, the first formed shape is prevented from doing so and instead adopts the profile of the male former 22. This forms profile 26, which closely adopts the profile of the male former 22 and importantly adopts the profile of the vertex 24. As the shape 26 was formed by shrinking, the stresses introduced in the material are greatly reduced and no failure of the material occurs.

Figures 4a to 4c provide images of various stages of the above process. Figure 4a shows the hemispherical first formed shape 20 with the male former 22 positioned inside it.

A further refinement of clamping the shape to more closely adopt the profile of male former 22 can be employed to result in profile 28. Figure 4b shows the formed shape 28 being clamped in position by clamps 30. Also shown is a tube 32, from which the heated air flowed.

Figure 4c shows the final shape 28 once the former 22 and clamps 30 have been removed. It can be seen that a tetrahedral shape having a sharp vertex has been formed in the material.

Figure 5 shows the final shape 28 removed from its clamps 12, together with a further image of the final shape 38 after it has been folded, ready to be filled with particulate infusion material and sealed.

Claims

1. A process for forming a sheet of thermoplastic material into a three-dimensional shape comprising at least one vertex, the process comprising the steps of:
   (i) forming the sheet by means of a former having a profile such as to produce a first formed shape in the sheet, followed by
   (ii) positioning a male former within the first formed shape, the male former having a profile within the first formed shape comprising at least one vertex and
   (iii) raising the temperature of the first formed shape above that of forming in step (i), thereby causing the first formed shape to shrink back towards its original sheet form and thereby adopting the profile of the male former.

2. A process according to claim 1 wherein the thermoplastic material has an average thickness of less than 1.0 mm, preferably less than 0.50 mm, more preferably less than 0.2 mm, most preferably less than 0.1 mm.

3. A process according to claim 1 or claim 2, wherein the thermoplastic material is gas permeable.

4. A process according to claim 3, wherein the thermoplastic material has a fabric form.

5. A process according to any one of the preceding claims, wherein the first formed shape is formed by a male former in step (i).

6. A process according to any one of the preceding claims, wherein, in step (ii), the temperature of the first formed shape is raised to over 100°C, preferably over 120°C.

7. A process according to any one of the preceding claims, wherein the male former is pyramidal, preferably tetrahedral.

8. A process according to any one of the claims 1 to 6, wherein the male former comprises a plurality of vertices.

9. A process according to any one of the preceding claims, wherein the former in step (i) has a profile without any edges or vertices where it comes into contact with the thermoplastic material.

10. A process according to any one of the preceding claims, wherein the thermoplastic material comprises poly lactic acid.

11. A process according to any one of the preceding claims, which is followed by the step of depositing a particulate product, preferably comprising infusible entities such as tea leaves, into the three-dimensional shape.

12. A process according to claim 11, which is followed by sealing the thermoformed material to produce a sealed porous infusion packet.

Fig.1.

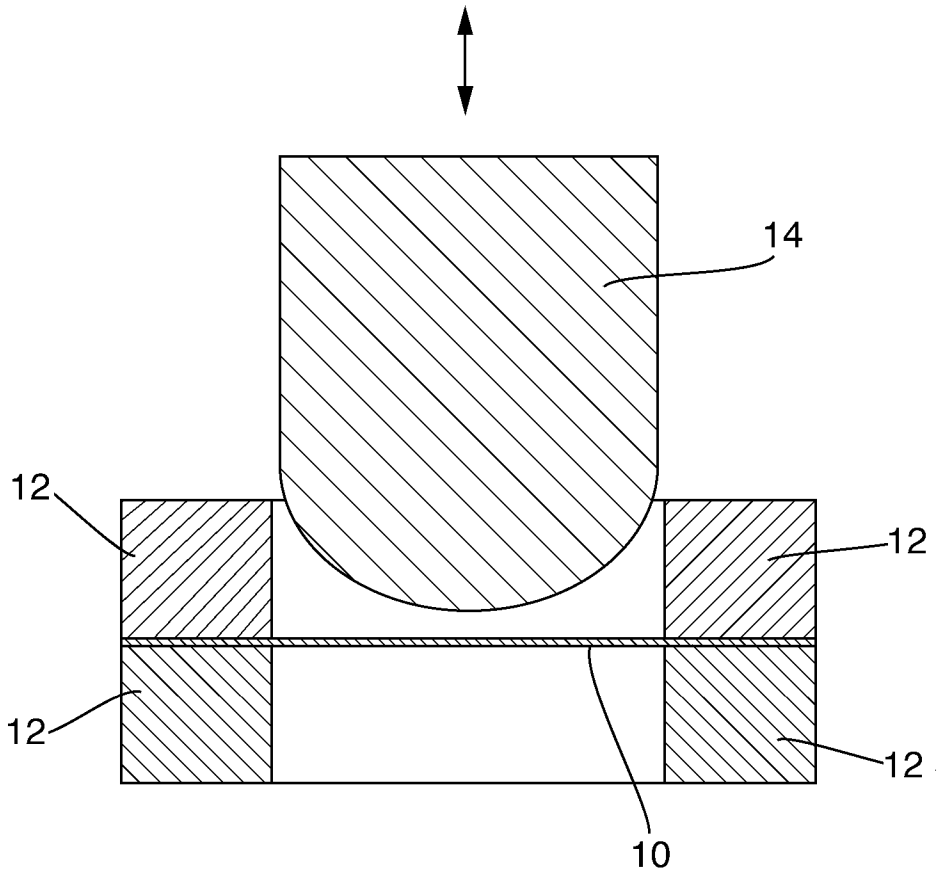

Fig.2.

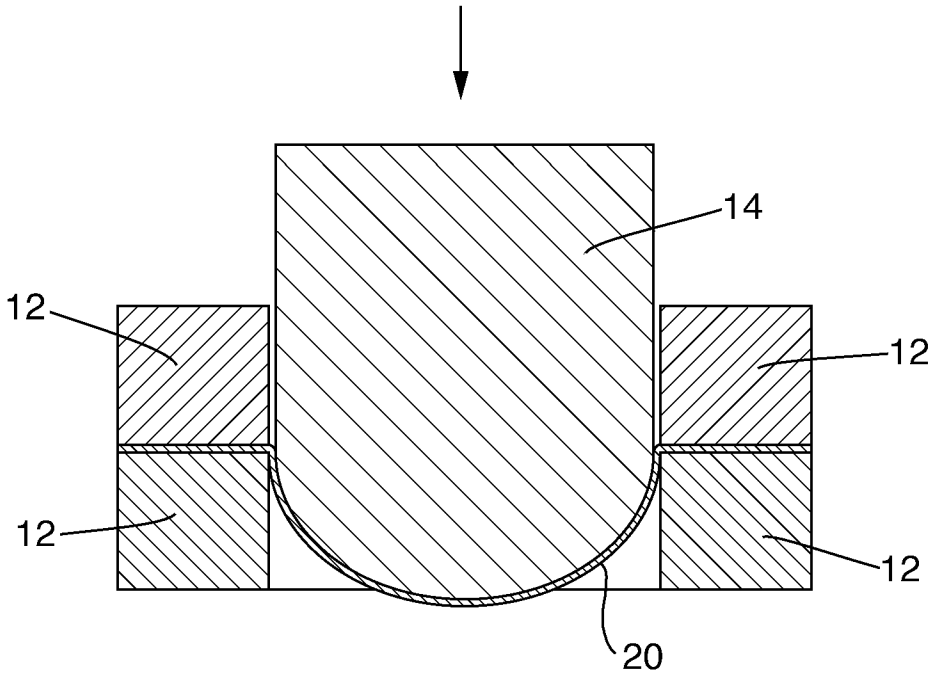

Fig.3.

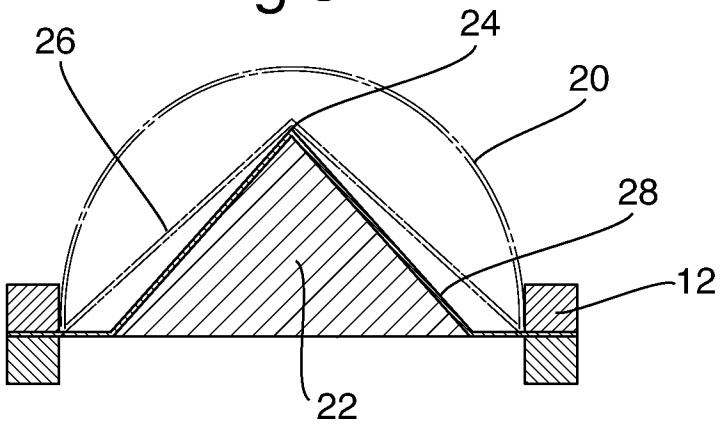

Fig.4a.

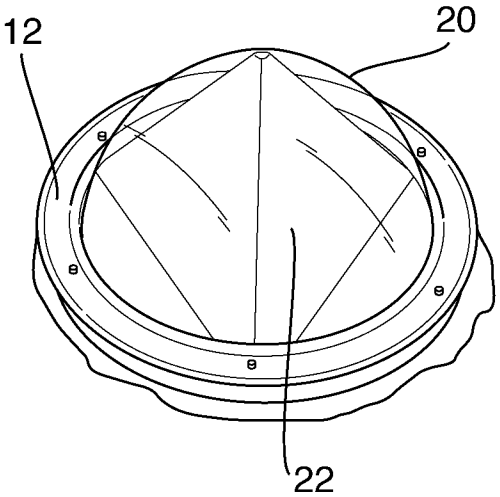

Fig.4b.

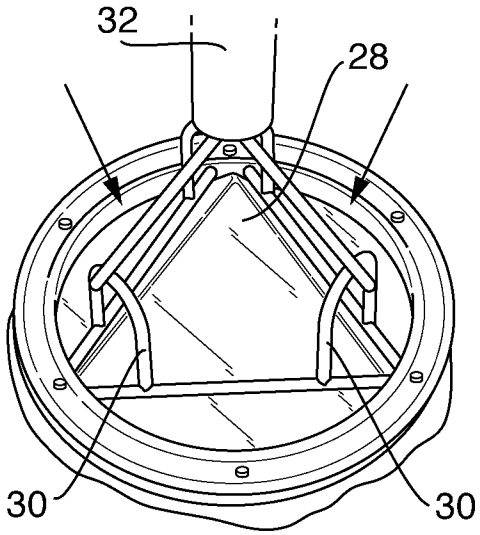

Fig.4c.

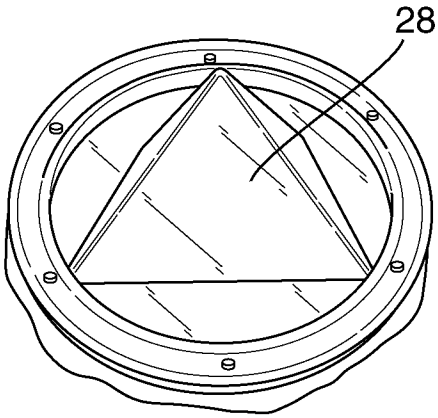

Fig.5.

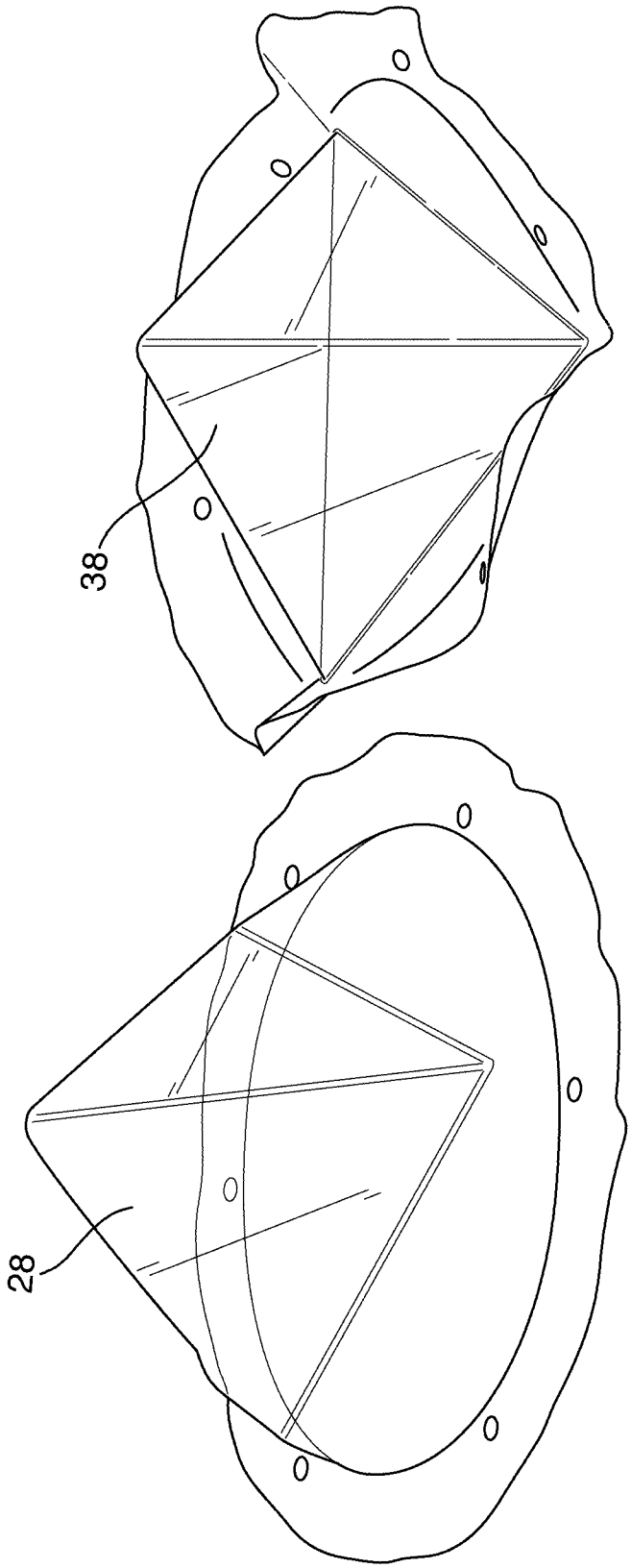

INTERNATIONAL SEARCH REPORT

International application No
PCT/EP2012/056529

A. CLASSIFICATION OF SUBJECT MATTER

INV. B29C69/02
ADD. B29C61/02 B29C51/08

According to International Patent Classification (IPC) or to both national classification and IPC

B. FIELDS SEARCHED

Minimum documentation searched (classification system followed by classification symbols)

B29C B29D B32B B65B B65D

Documentation searched other than minimum documentation to the extent that such documents are included in the fields searched

Electronic data base consulted during the international search (name of data base and, where practicable, search terms used)

EPO-Internal

C. DOCUMENTS CONSIDERED TO BE RELEVANT

Category*	Citation of document, with indication, where appropriate, of the relevant passages	Relevant to claim No.
A	WO 2004/033303 A1 (IMA SPA [IT]; REA DARIO [IT]; RIVOLA SAURO [IT]) 22 April 2004 (2004-04-22) cited in the application figures 3-11 -----	1-12
A	JP 2004 223948 A (KOBE STEEL LTD) 12 August 2004 (2004-08-12) figures 1-4 paragraph [0035] -----	1-12
A	DE 14 79 082 A1 (DUNLOP RUBBER CO) 30 April 1969 (1969-04-30) abstract figures 6,7 -----	1-12
A	EP 1 825 998 A1 (CRYOVAC INC [US]) 29 August 2007 (2007-08-29) figure 4 -----	1-12

☐ Further documents are listed in the continuation of Box C.

☒ See patent family annex.

* Special categories of cited documents :

"A" document defining the general state of the art which is not considered to be of particular relevance

"E" earlier application or patent but published on or after the international filing date

"L" document which may throw doubts on priority claim(s) or which is cited to establish the publication date of another citation or other special reason (as specified)

"O" document referring to an oral disclosure, use, exhibition or other means

"P" document published prior to the international filing date but later than the priority date claimed

"T" later document published after the international filing date or priority date and not in conflict with the application but cited to understand the principle or theory underlying the invention

"X" document of particular relevance; the claimed invention cannot be considered novel or cannot be considered to involve an inventive step when the document is taken alone

"Y" document of particular relevance; the claimed invention cannot be considered to involve an inventive step when the document is combined with one or more other such documents, such combination being obvious to a person skilled in the art

"&" document member of the same patent family

Date of the actual completion of the international search	Date of mailing of the international search report
21 May 2012	12/10/2012

Name and mailing address of the ISA/	Authorized officer
European Patent Office, P.B. 5818 Patentlaan 2 NL - 2280 HV Rijswijk Tel. (+31-70) 340-2040, Fax: (+31-70) 340-3016	Schneider, Dominik

INTERNATIONAL SEARCH REPORT

Information on patent family members

International application No
PCT/EP2012/056529

Patent document cited in search report		Publication date	Patent family member(s)			Publication date
WO 2004033303	A1	22-04-2004	AT	334058	T	15-08-2006
			AU	2003264770	A1	04-05-2004
			CN	1684872	A	19-10-2005
			DE	60307119	T2	15-02-2007
			EP	1549548	A1	06-07-2005
			ES	2270169	T3	01-04-2007
			JP	4455997	B2	21-04-2010
			JP	2006502058	A	19-01-2006
			US	2004261370	A1	30-12-2004
			WO	2004033303	A1	22-04-2004
JP 2004223948	A	12-08-2004	NONE			
DE 1479082	A1	30-04-1969	DE	1479082	A1	30-04-1969
			GB	1058924	A	15-02-1967
EP 1825998	A1	29-08-2007	AU	2007200812	A1	13-09-2007
			CA	2579074	A1	28-08-2007
			EP	1825998	A1	29-08-2007
			NZ	553283	A	28-02-2009
			US	2007212550	A1	13-09-2007