US 20060278782A1

(19) **United States**

(12) **Patent Application Publication** (10) **Pub. No.: US 2006/0278782 A1**

Lockwood et al. (43) **Pub. Date: Dec. 14, 2006**

(54) **DISPLAY SYSTEM**

(76) Inventors: **Thomas A. Lockwood**, Clemmons, NC (US); **Thomas F. Lang**, New Milford, CT (US)

Correspondence Address:
JOHN S. PRATT, ESQ
KILPATRICK STOCKTON, LLP
1100 PEACHTREE STREET
ATLANTA, GA 30309 (US)

(21) Appl. No.: **11/151,106**

(22) Filed: **Jun. 13, 2005**

Related U.S. Application Data

(60) Provisional application No. 60/686,578, filed on May 31, 2005.

Publication Classification

(51) **Int. Cl.**
A47B 96/06 (2006.01)

(52) **U.S. Cl.** **248/220.31**

(57) **ABSTRACT**

A display system having an improved support structure to reduce the display profile and consequent shipping costs and an improved display hook for mounting on the display grid. A support structure, such as an easel, is formed with or attached to the rear side of the display grid to support the grid in an elevated position. Unlike prior displays that must be shipped with bulky support structures, the easel of this invention is collapsible, allowing the display to retain its relatively thin profile. To install the display in the store, the easel may be quickly and easily formed and locked into place to support the display. The easel may be formed and collapsed as necessary, facilitating both shipping of the display as well as transporting the display in the store. This invention also relates to an improved display hook capable of releasably engaging the grid at three locations and thereby distributing the product load carried by the hook and reducing the likelihood that the hook with be pulled from or otherwise disengage the grid.

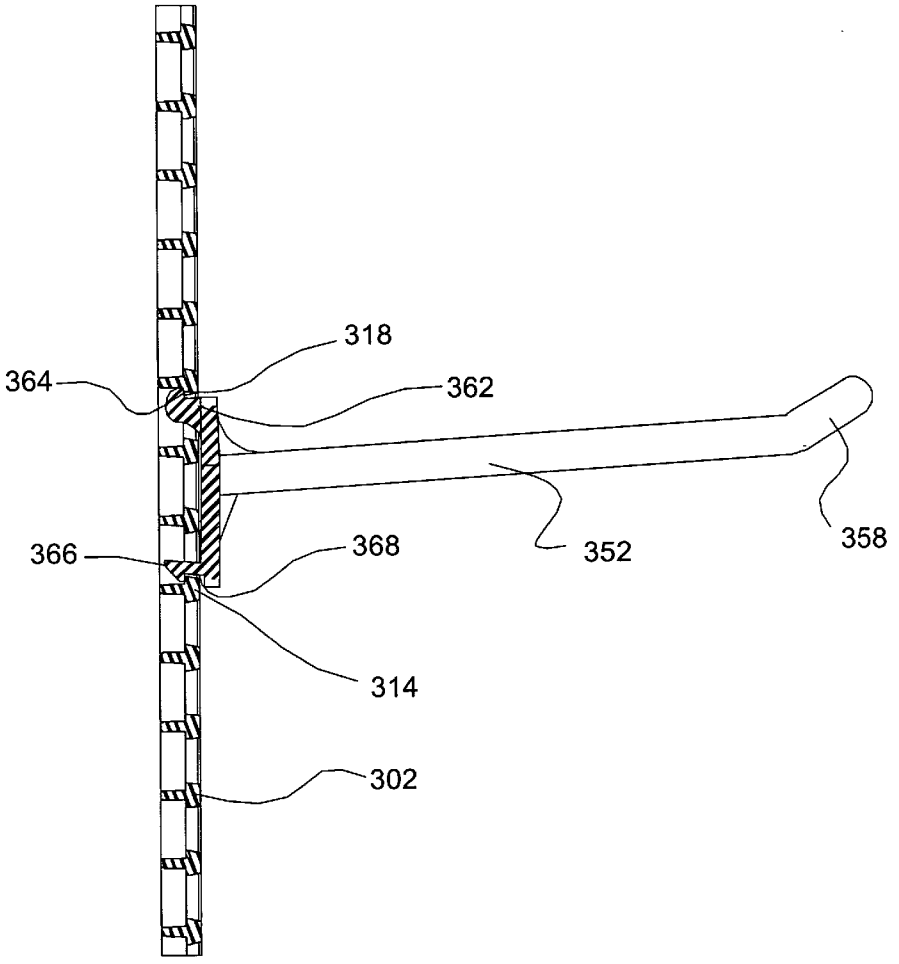

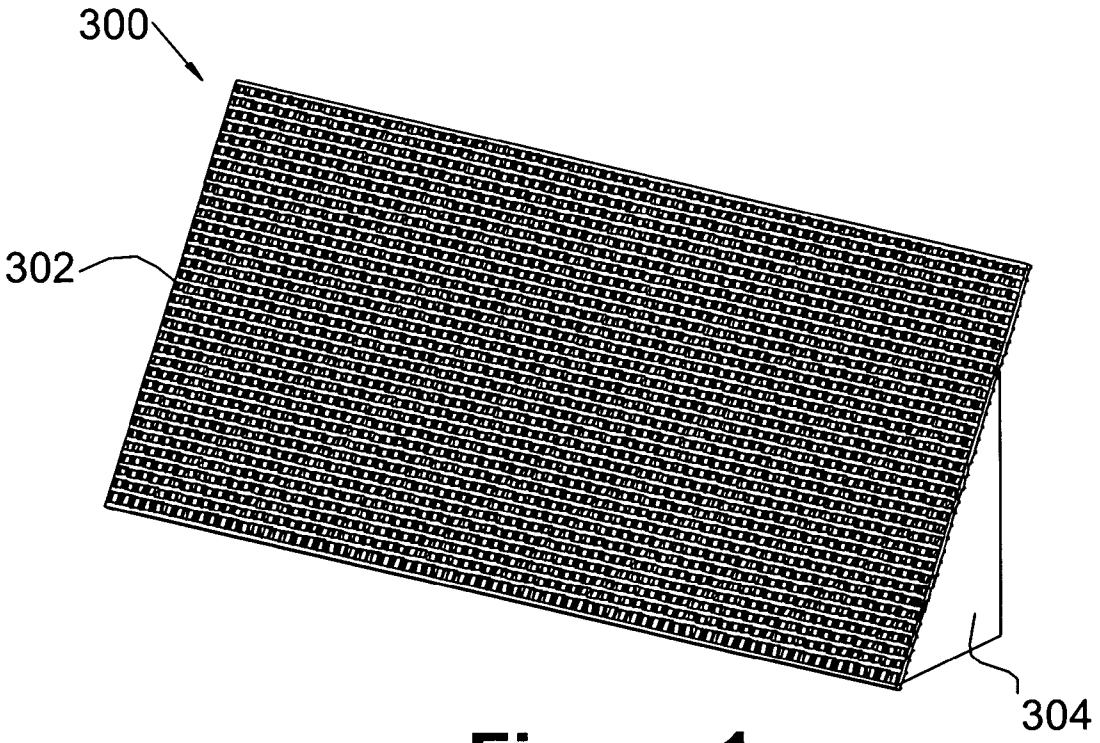

Figure 1

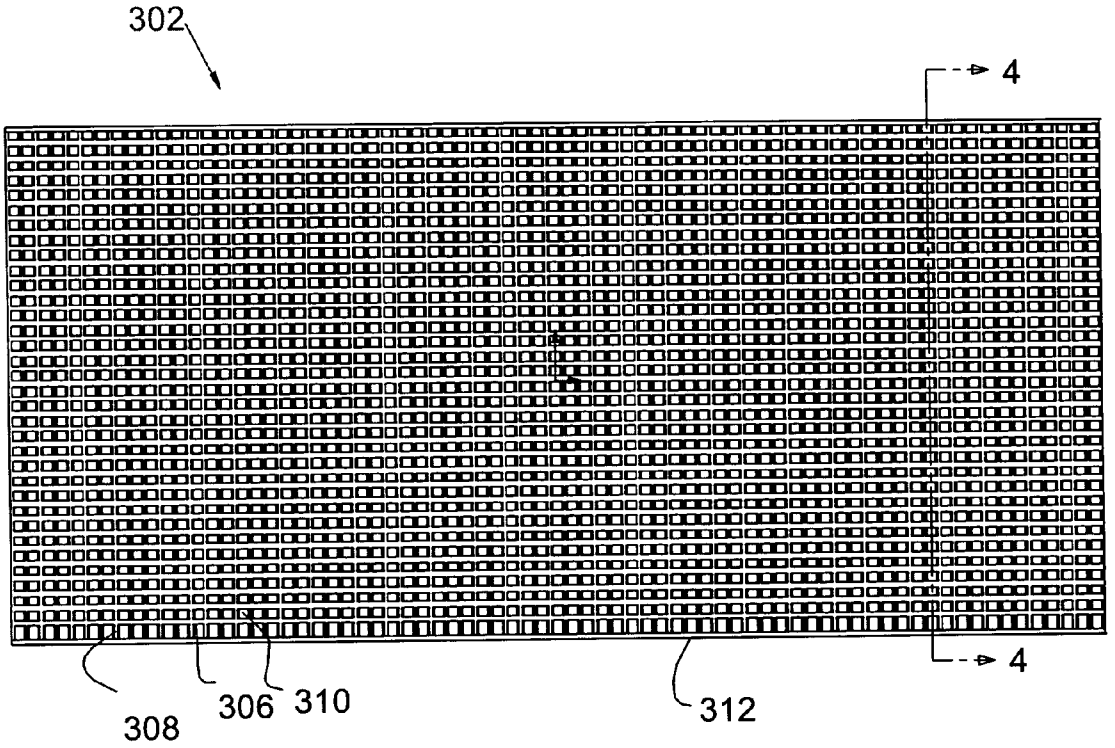

Figure 2

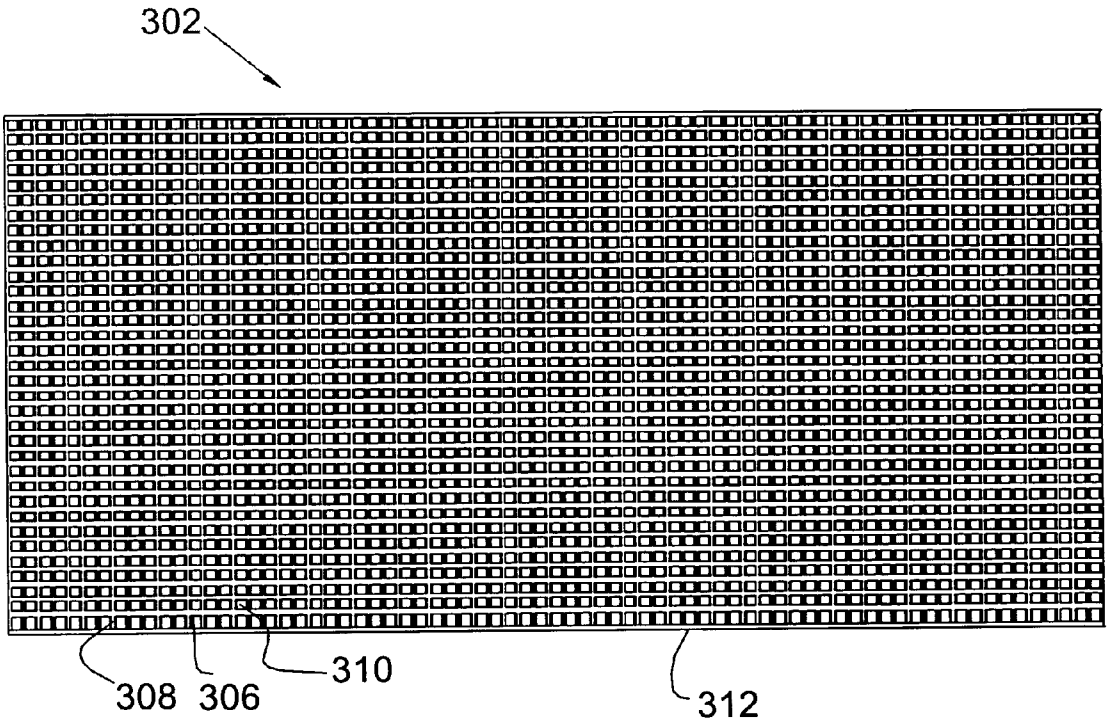

Figure 3

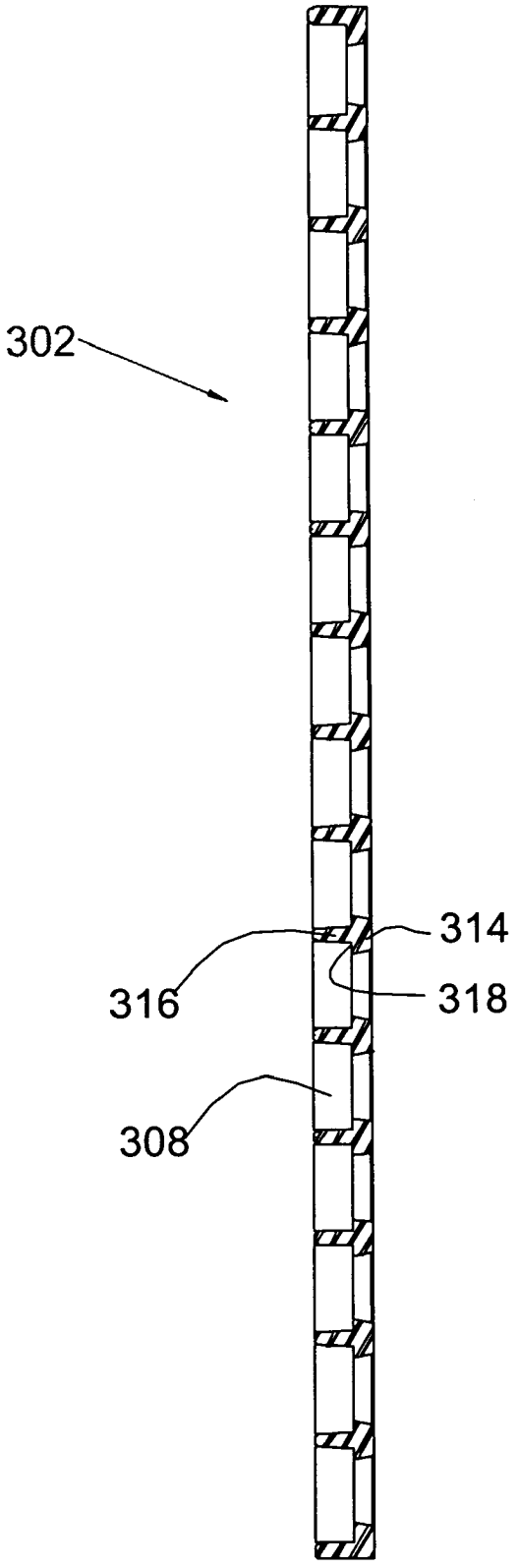

Figure 4

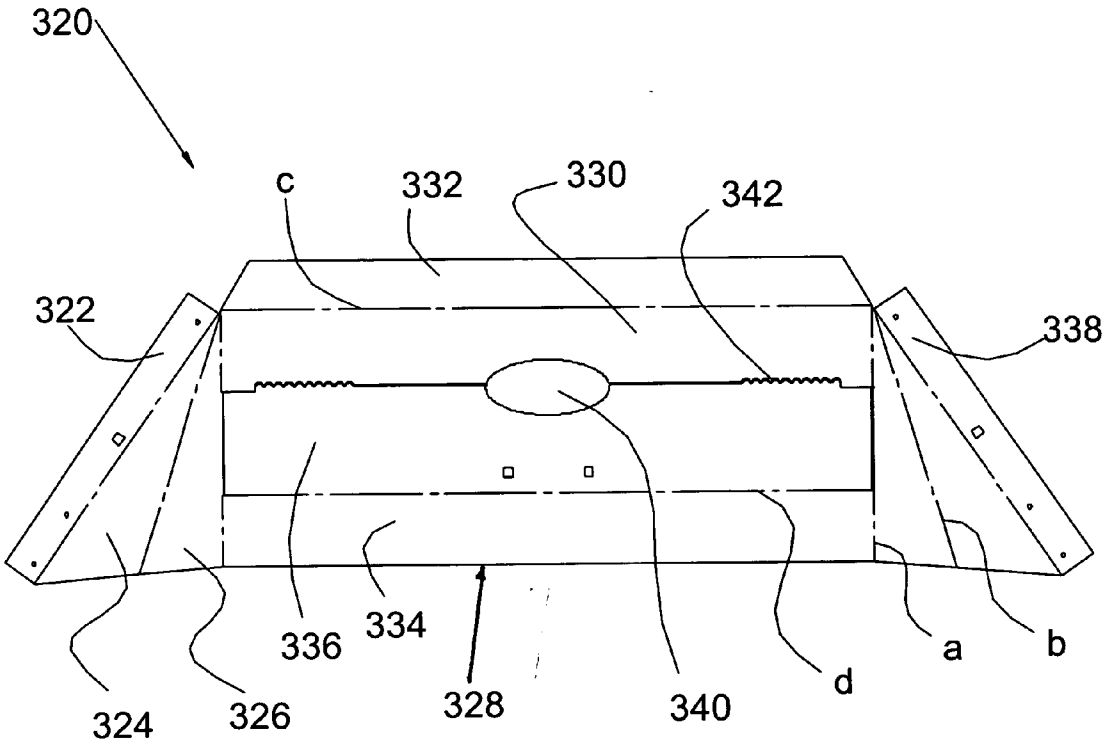

Figure 5

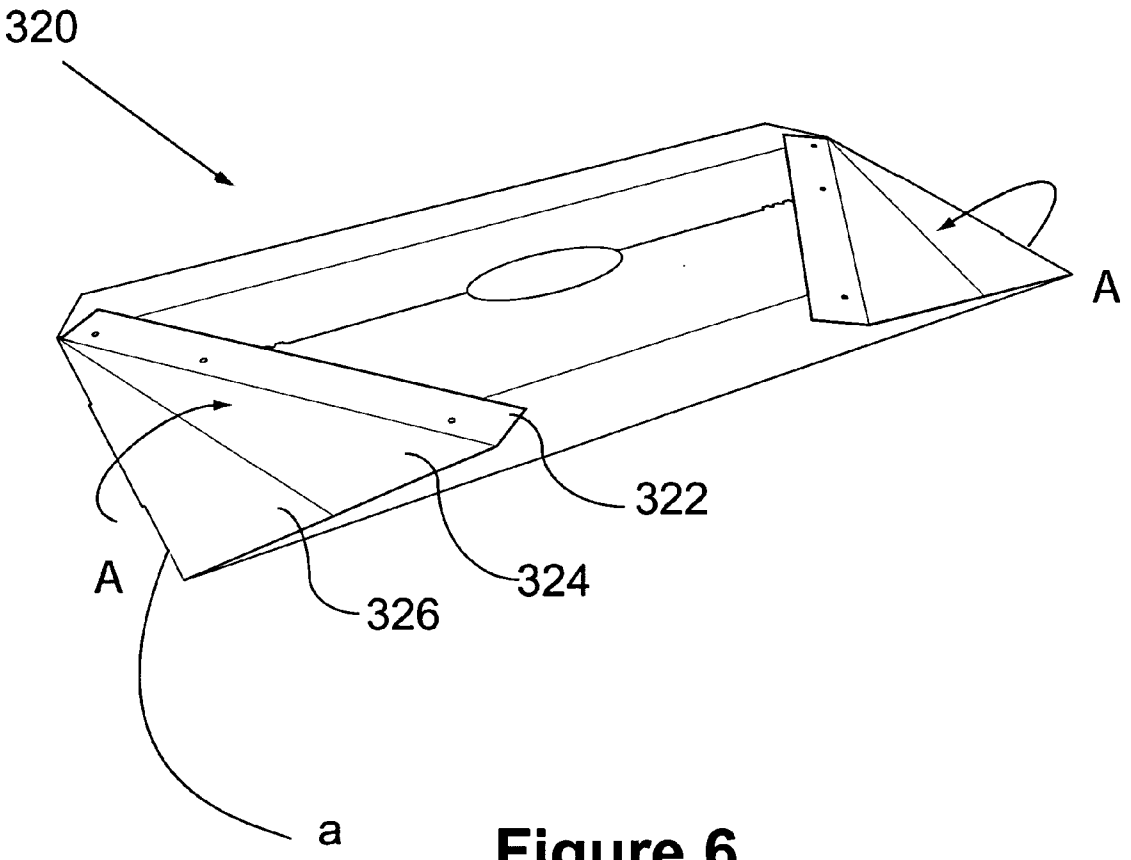

Figure 6

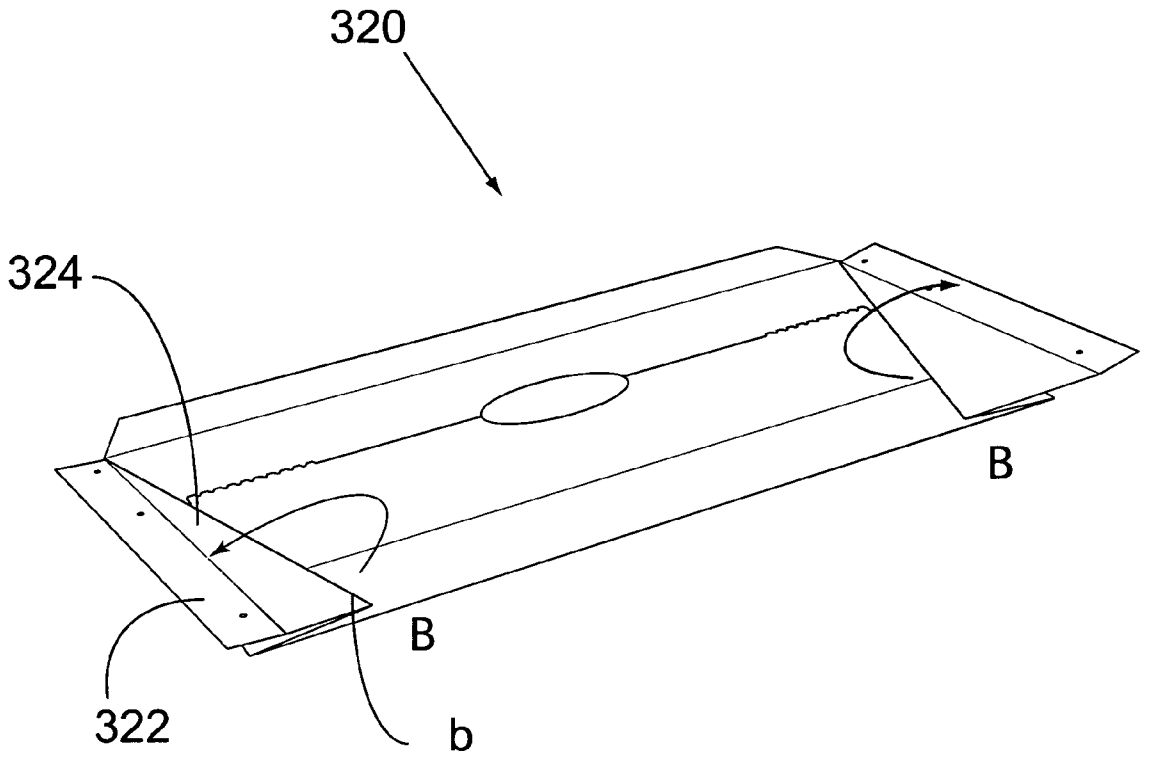

Figure 7

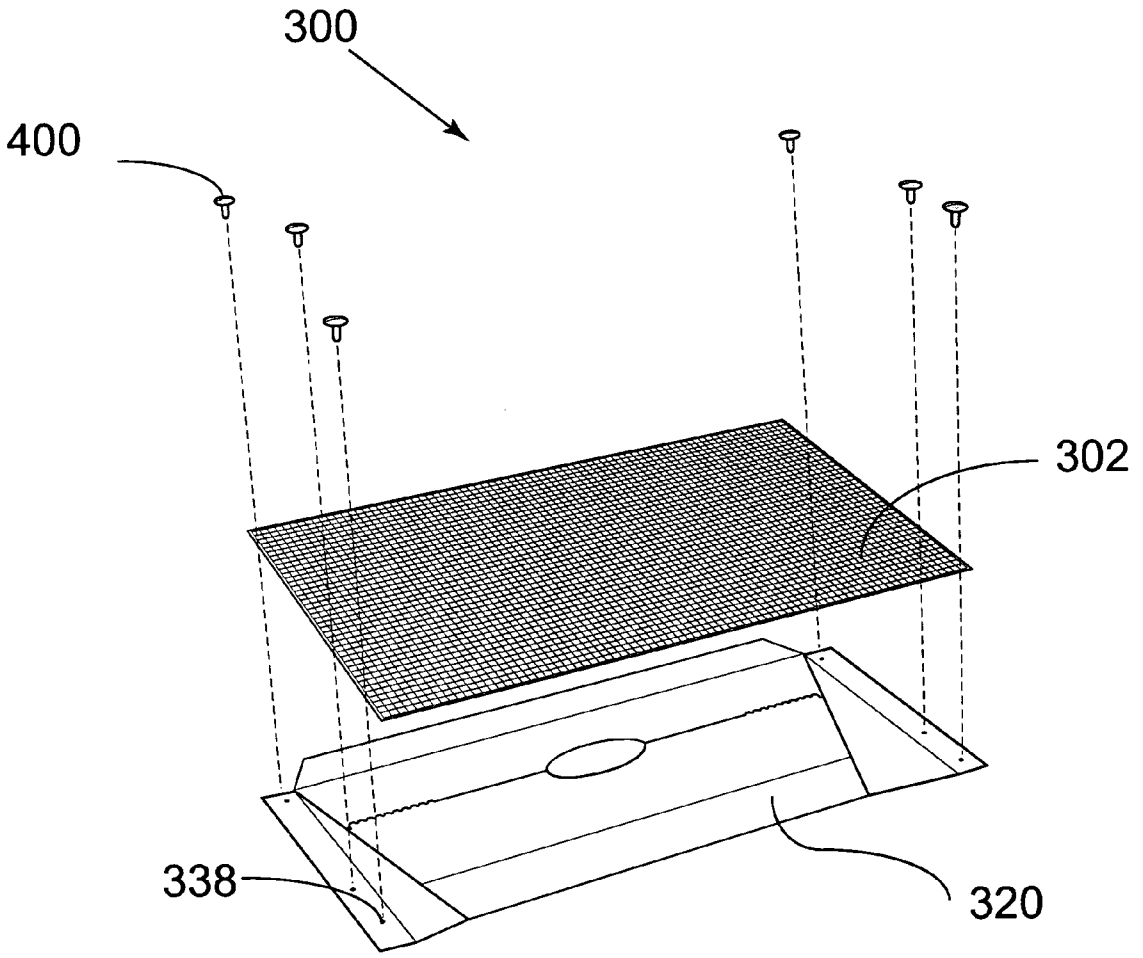

Figure 8

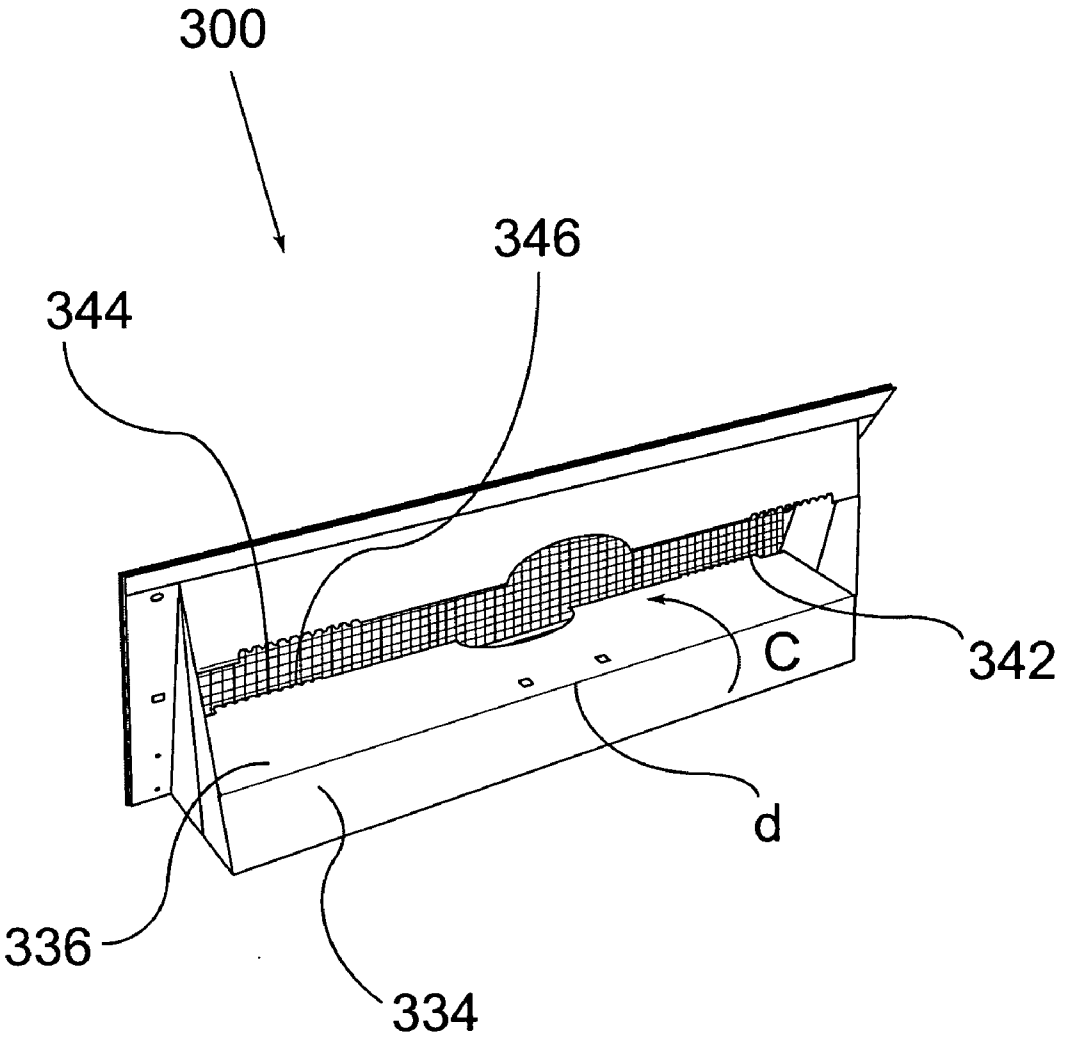

Figure 9

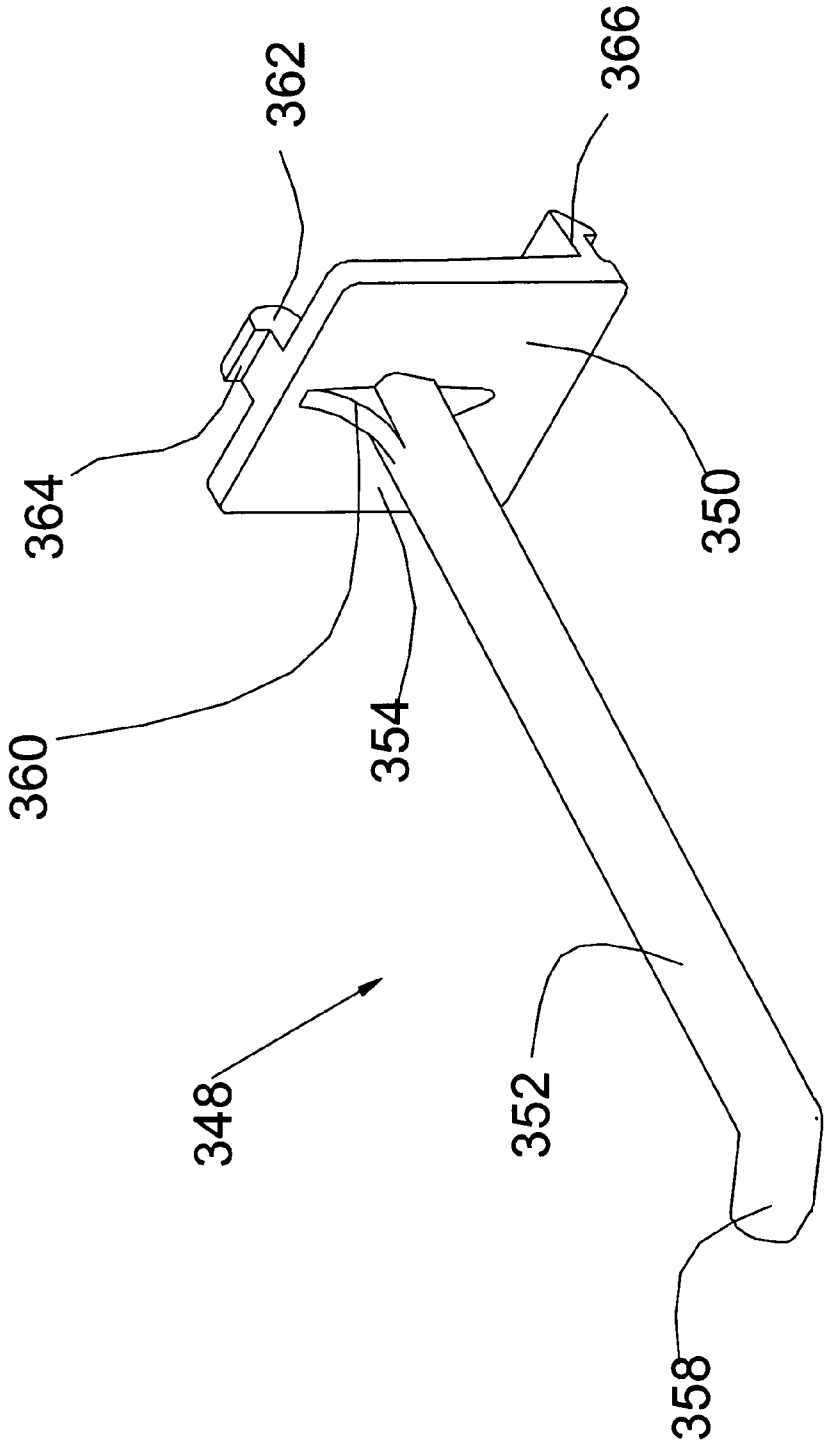

Figure 10

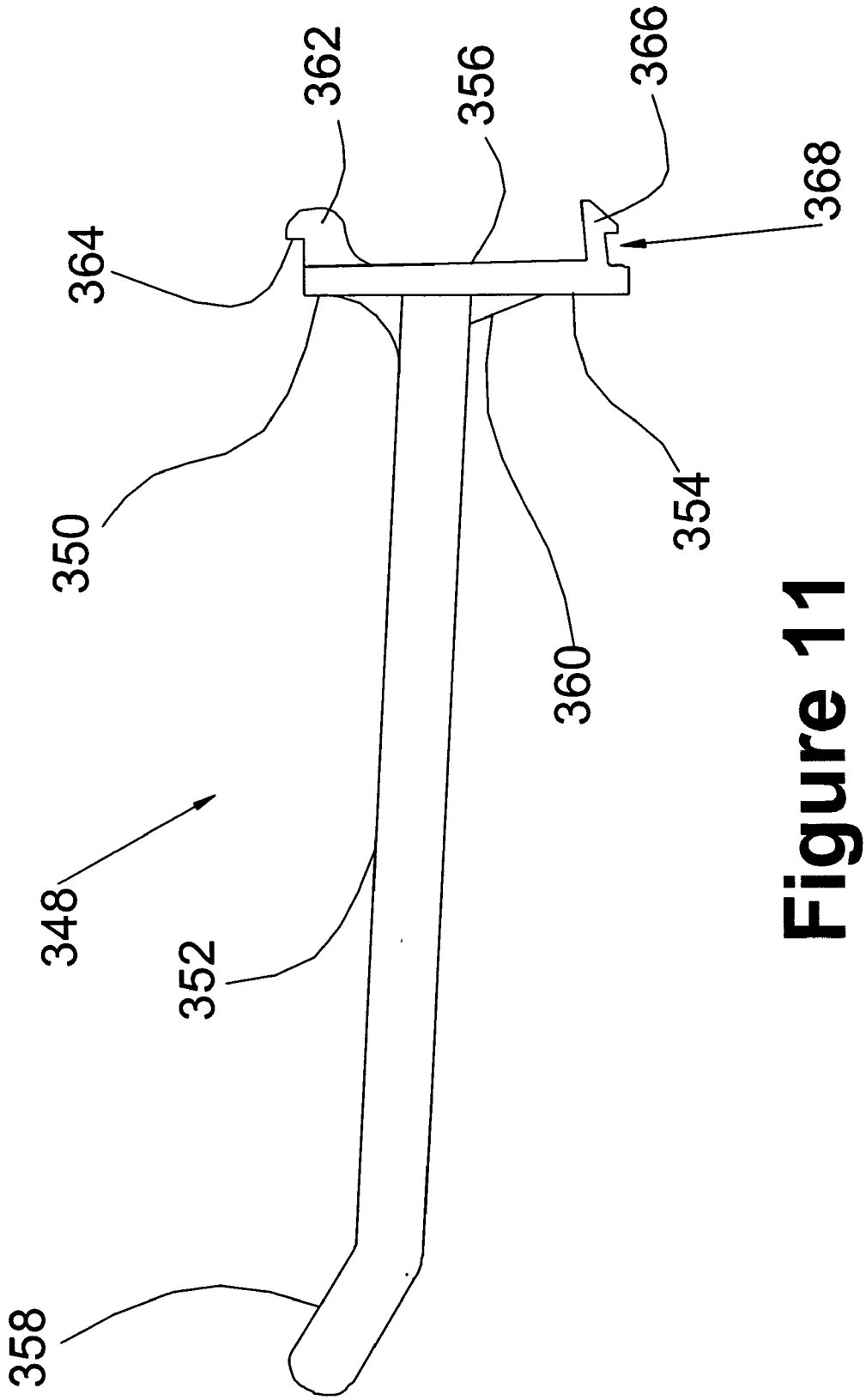

Figure 11

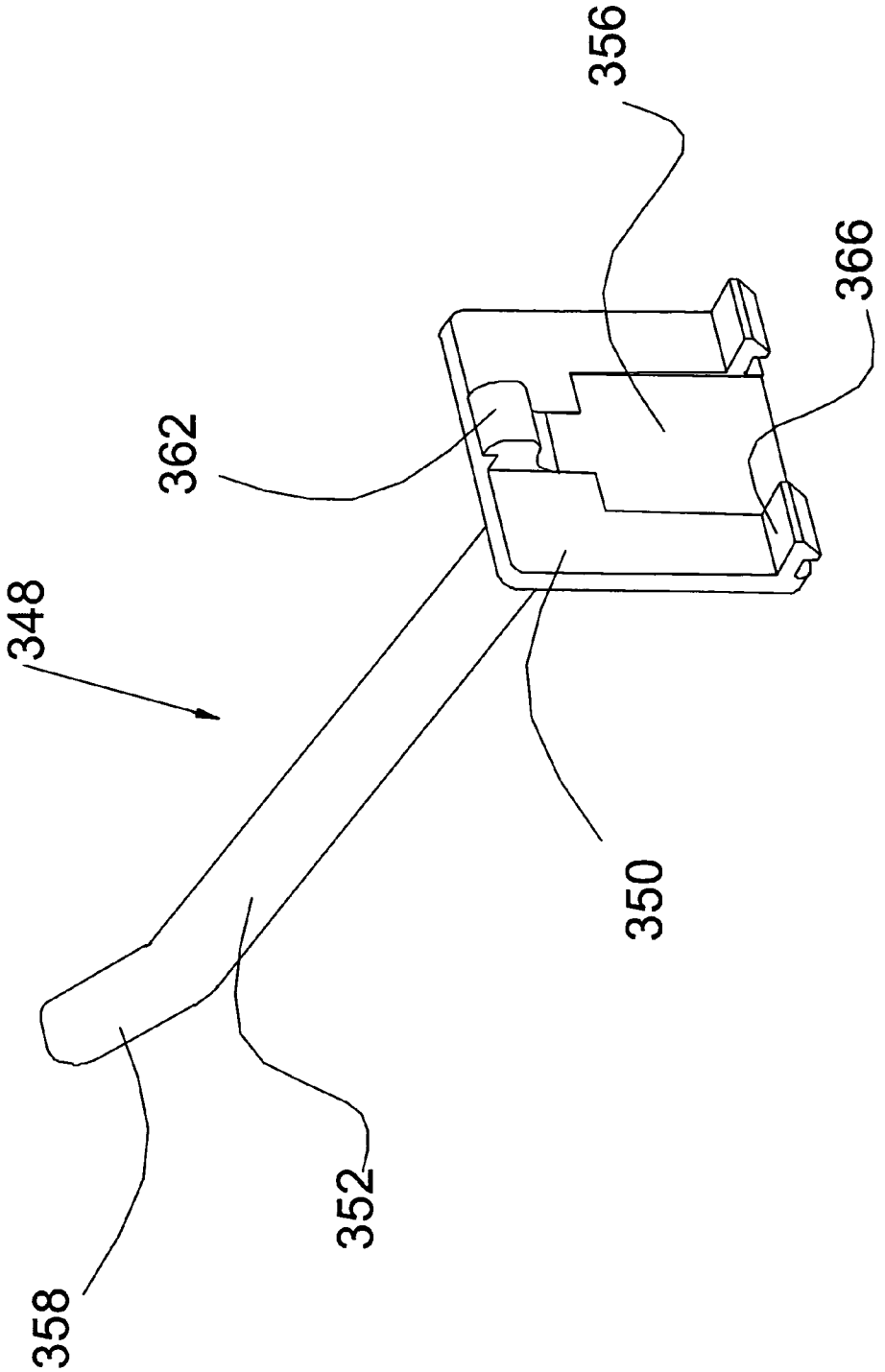

Figure 12

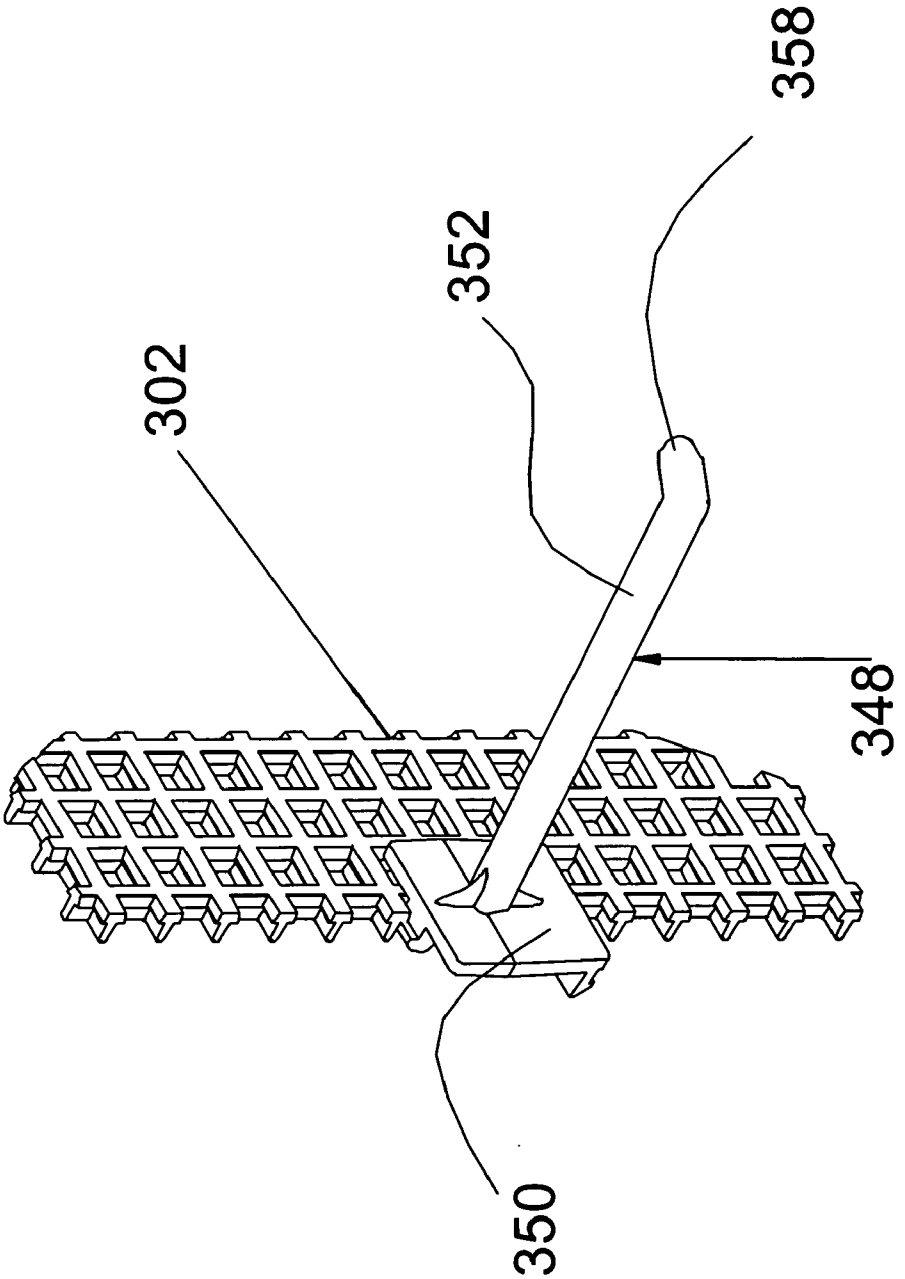

Figure 13

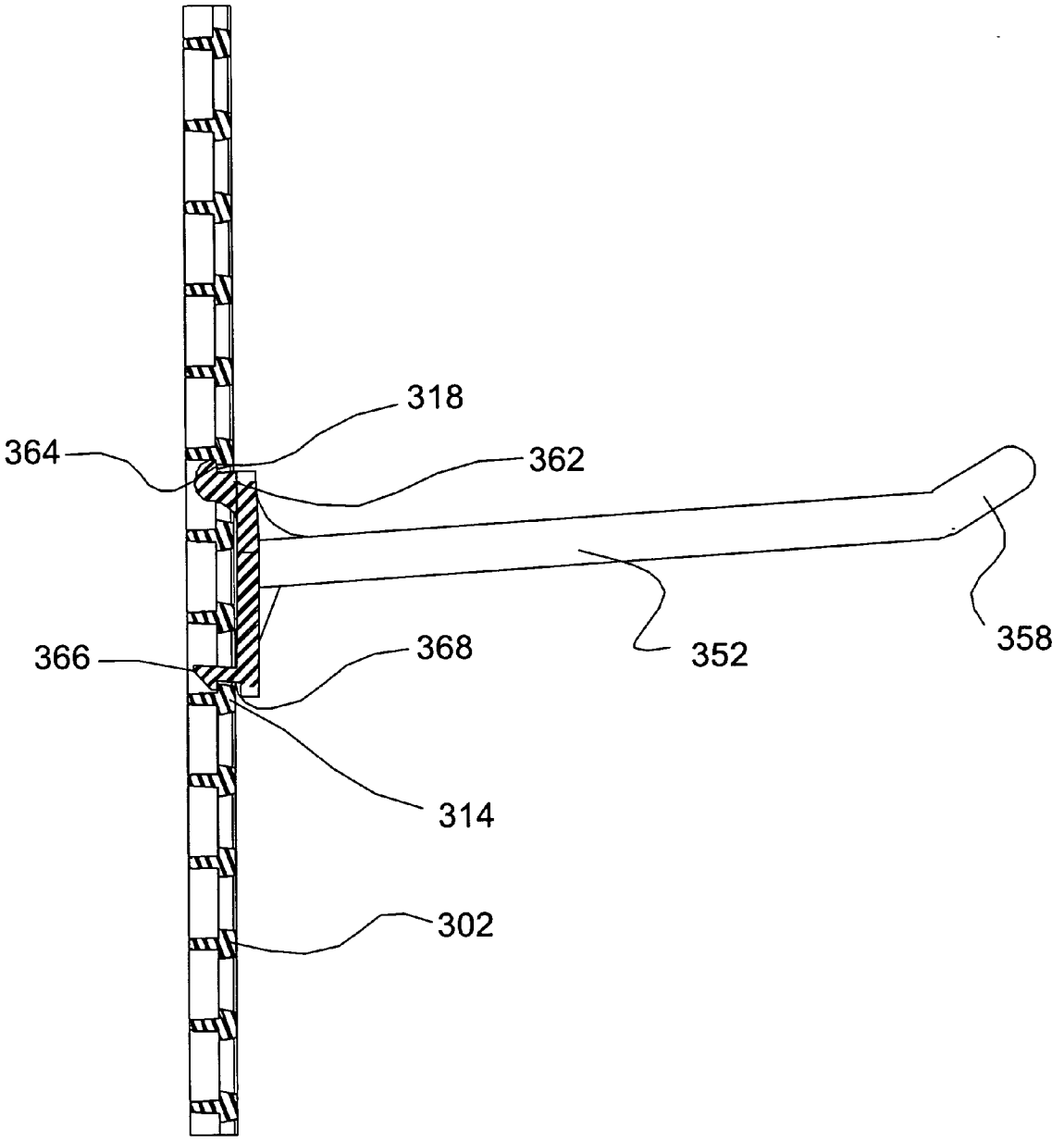

Figure 14

EXPRESS MAIL NO.: EV 506224977 US; Applicants: Thomas A. Lockwood et al.; Patent Application entitled: *Display System*
filed June 13, 2005; Wab Kadaba 404-815-6500
Attorney Docket: 38949/310414 15 of 24

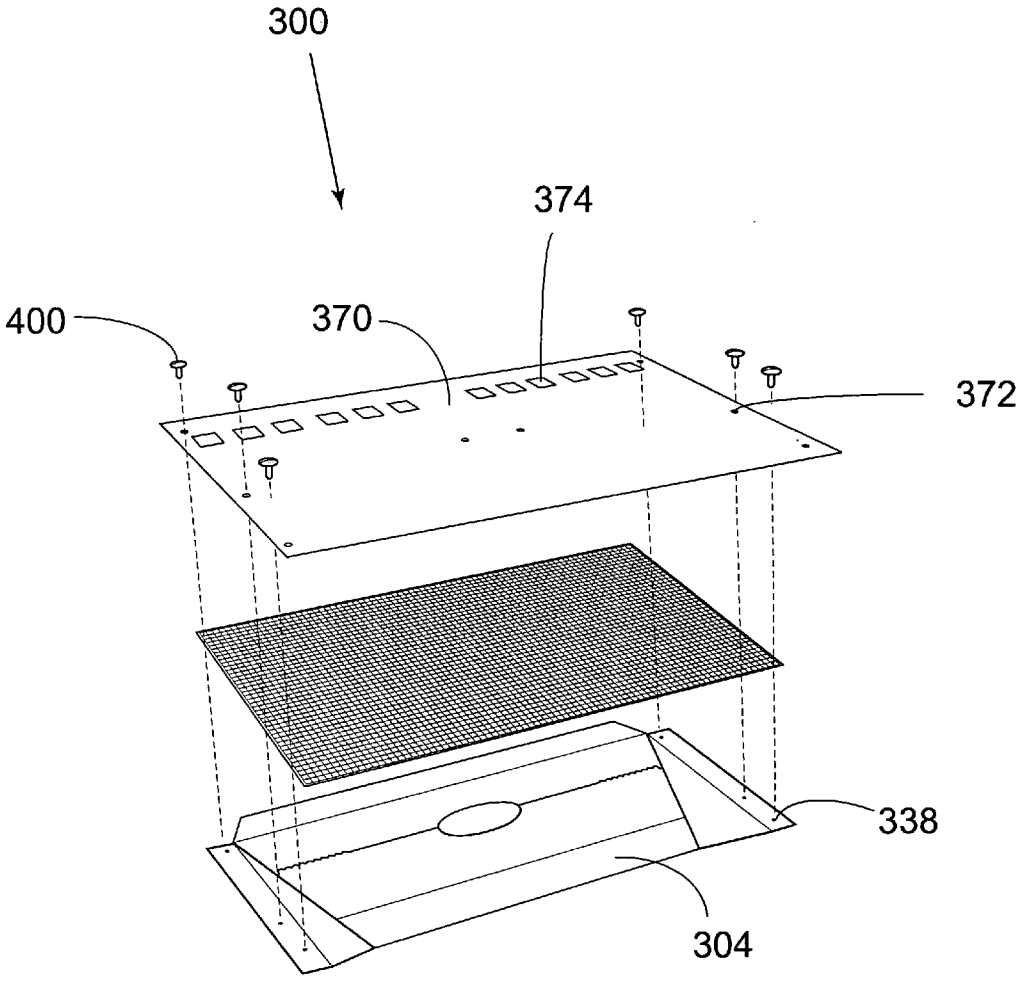

Figure 15

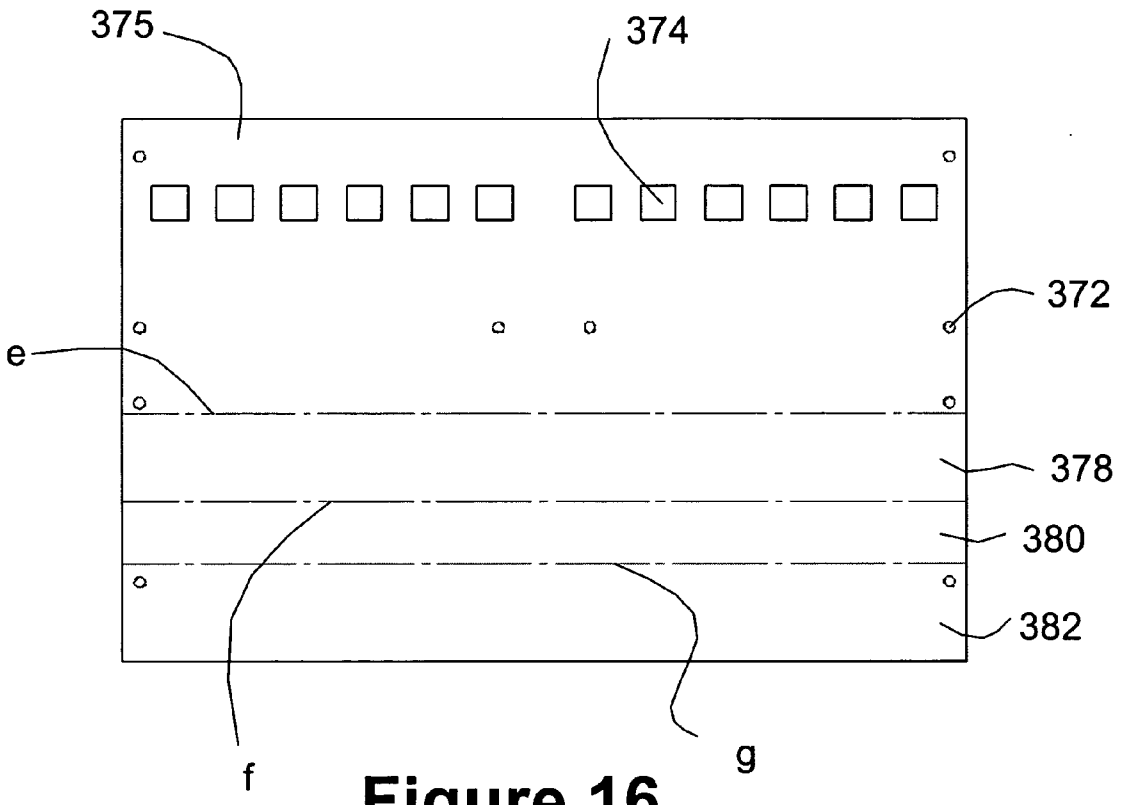

Figure 16

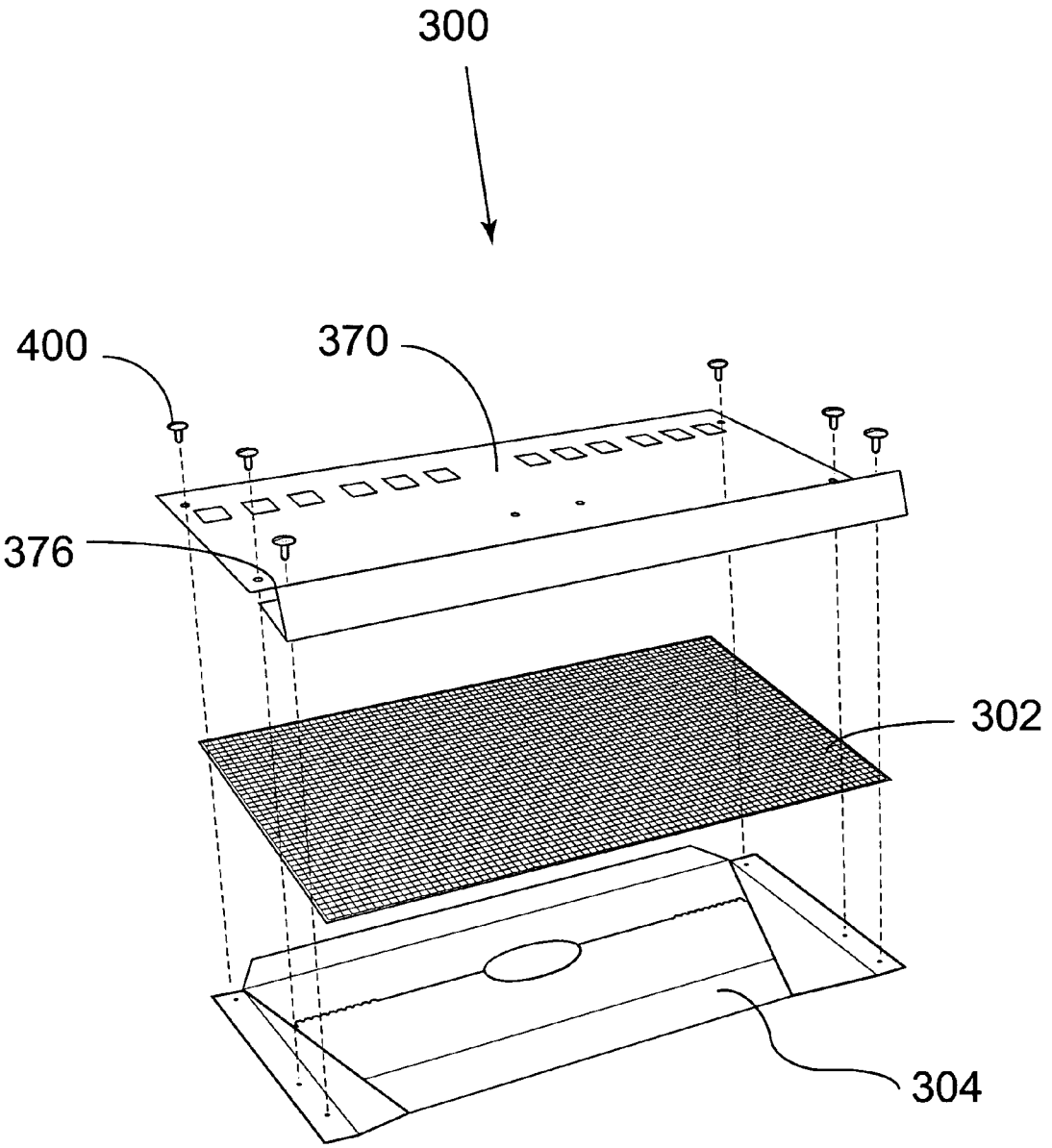

Figure 17

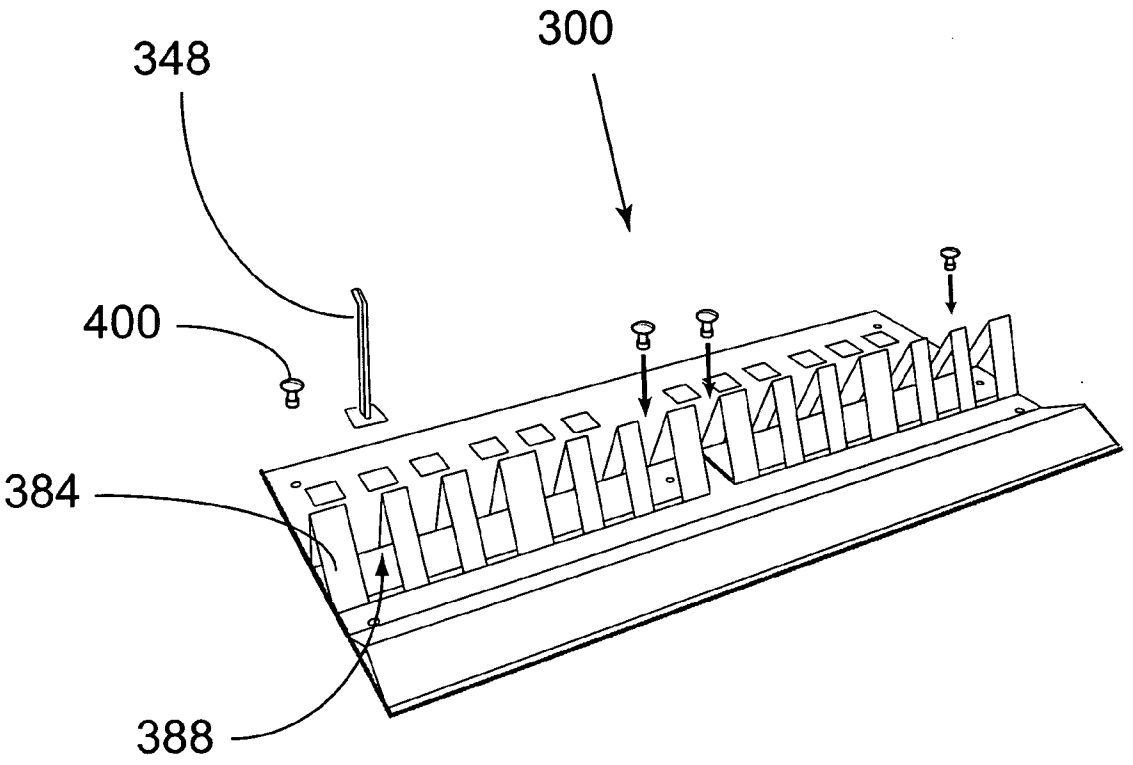

Figure 18

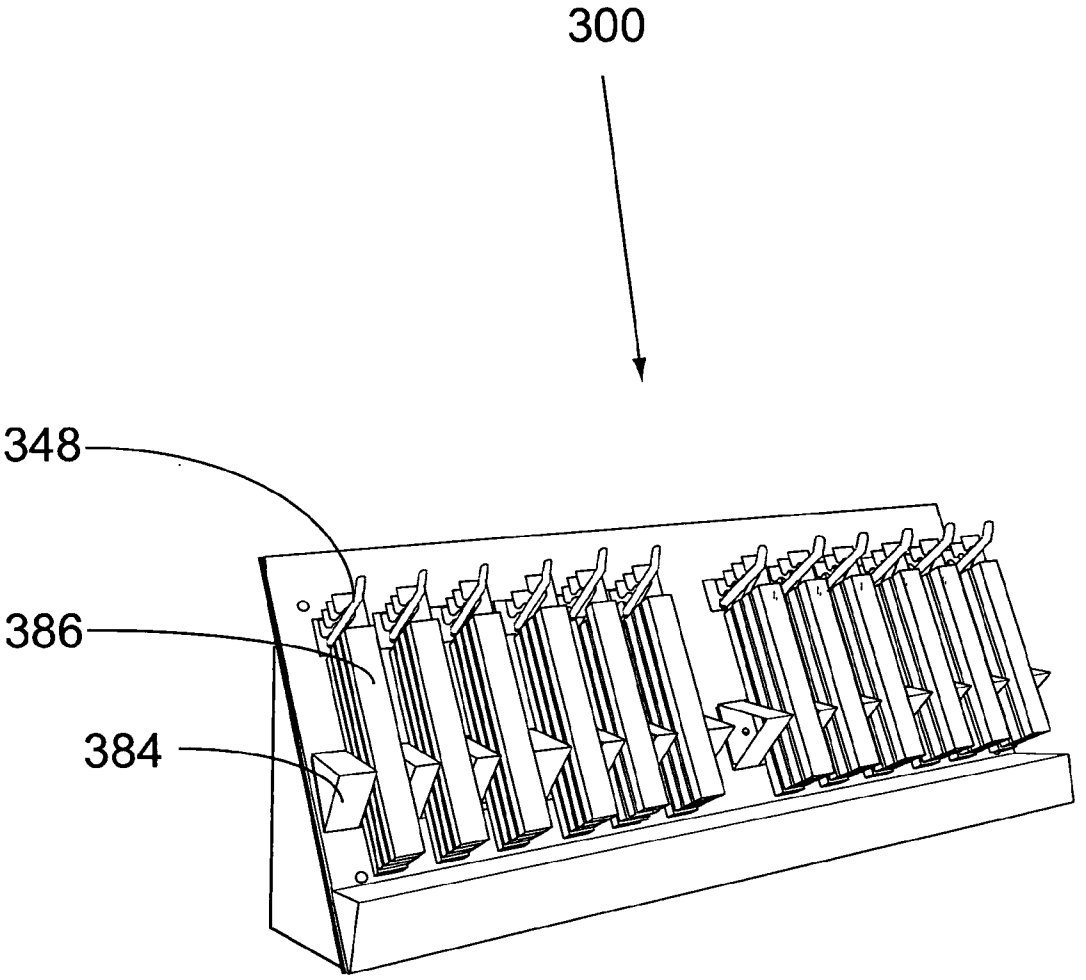

Figure 19

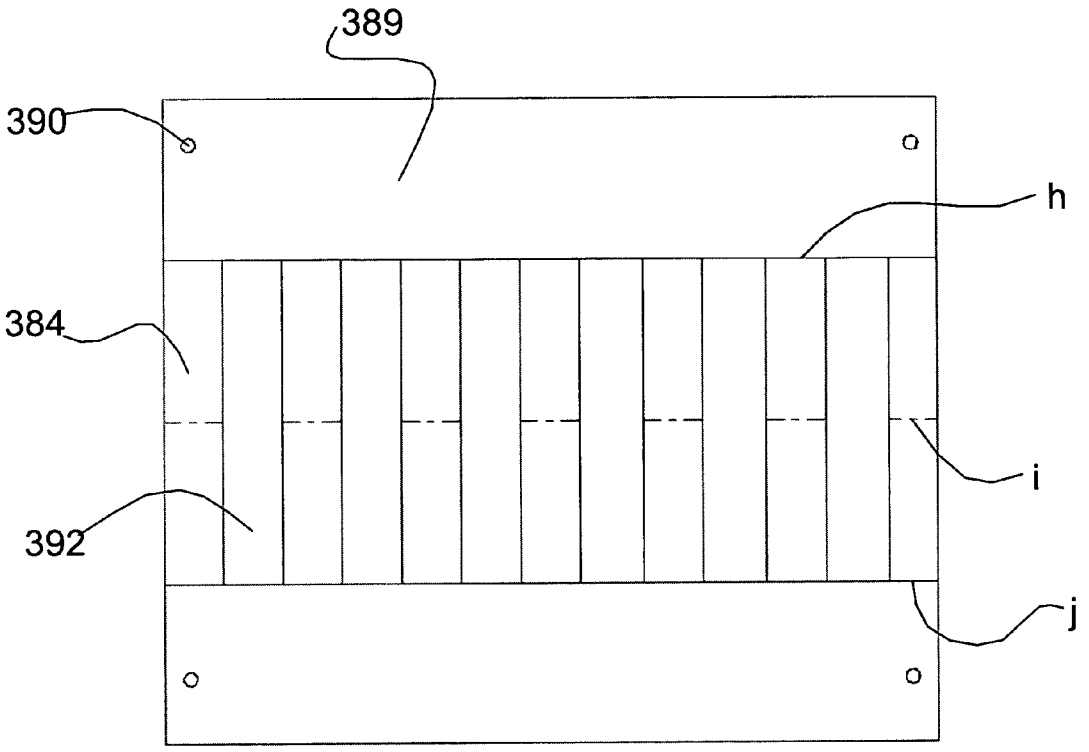

Figure 20

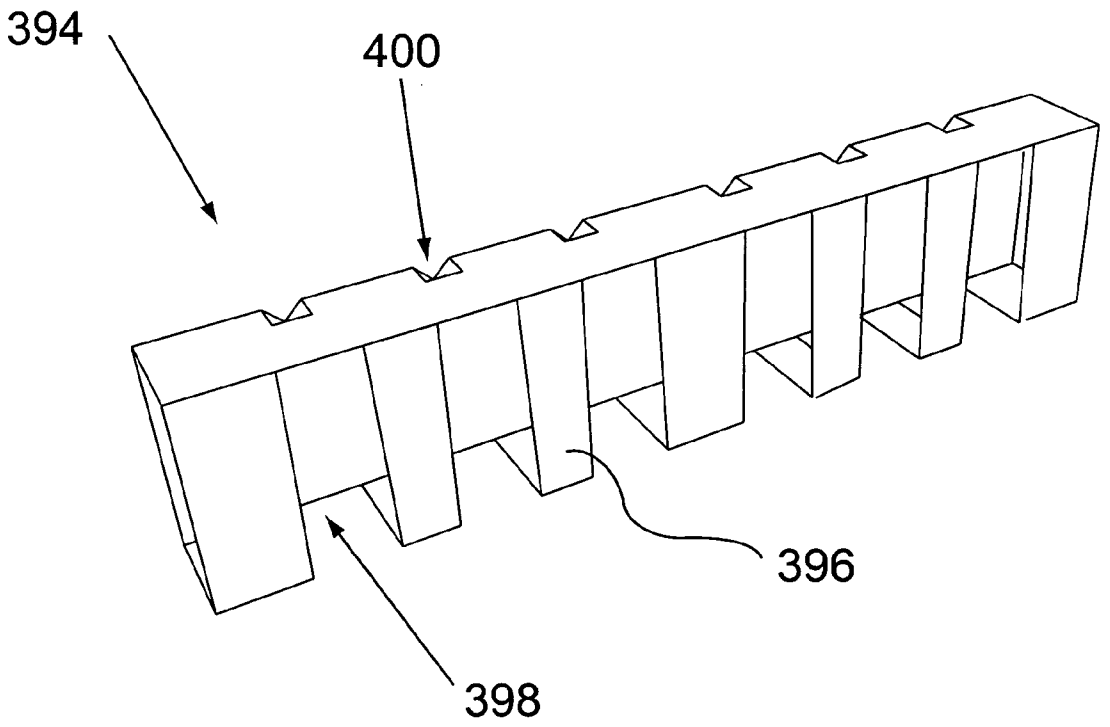

Figure 21

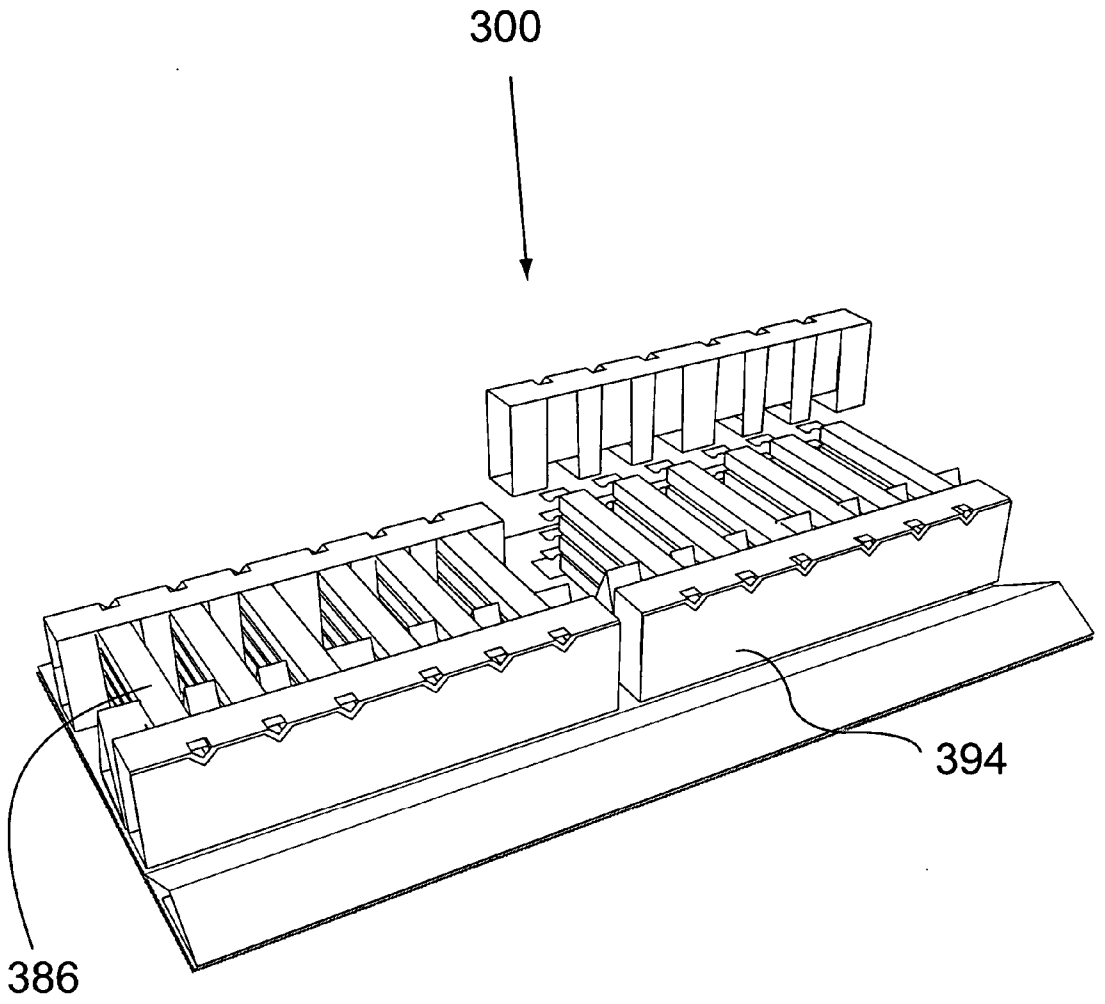

Figure 22

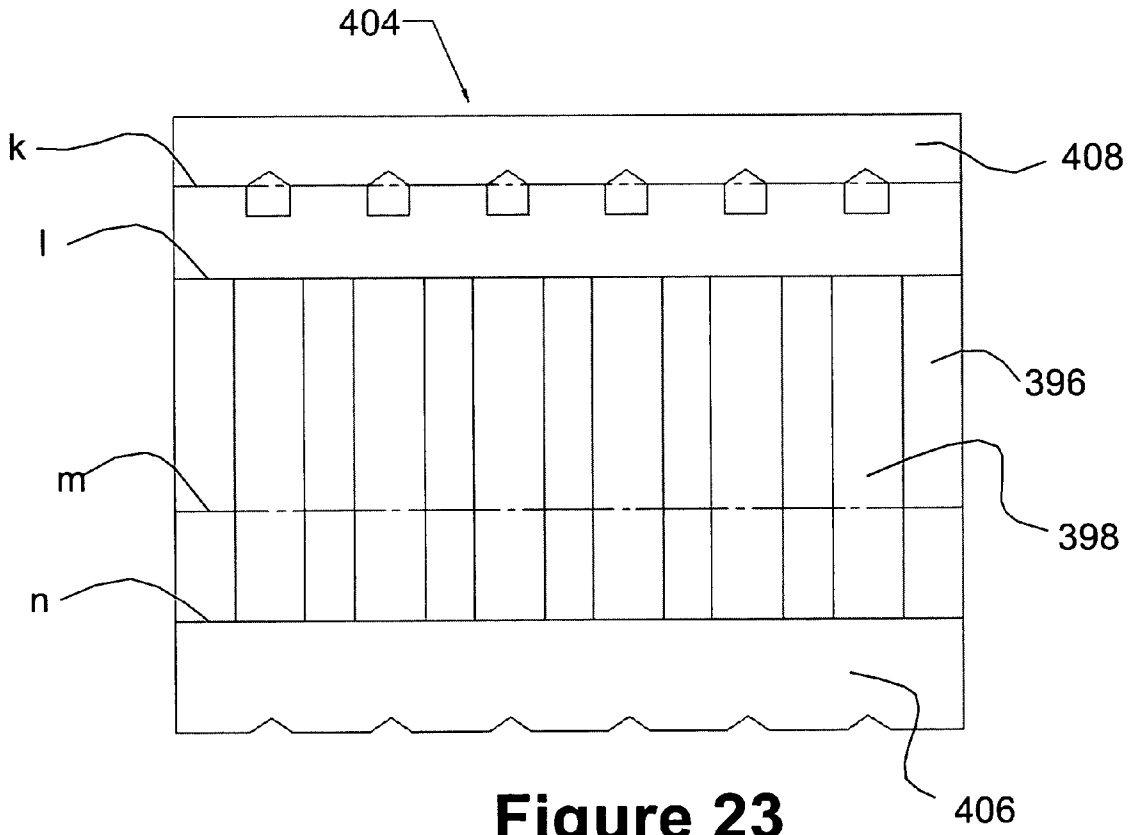

Figure 23

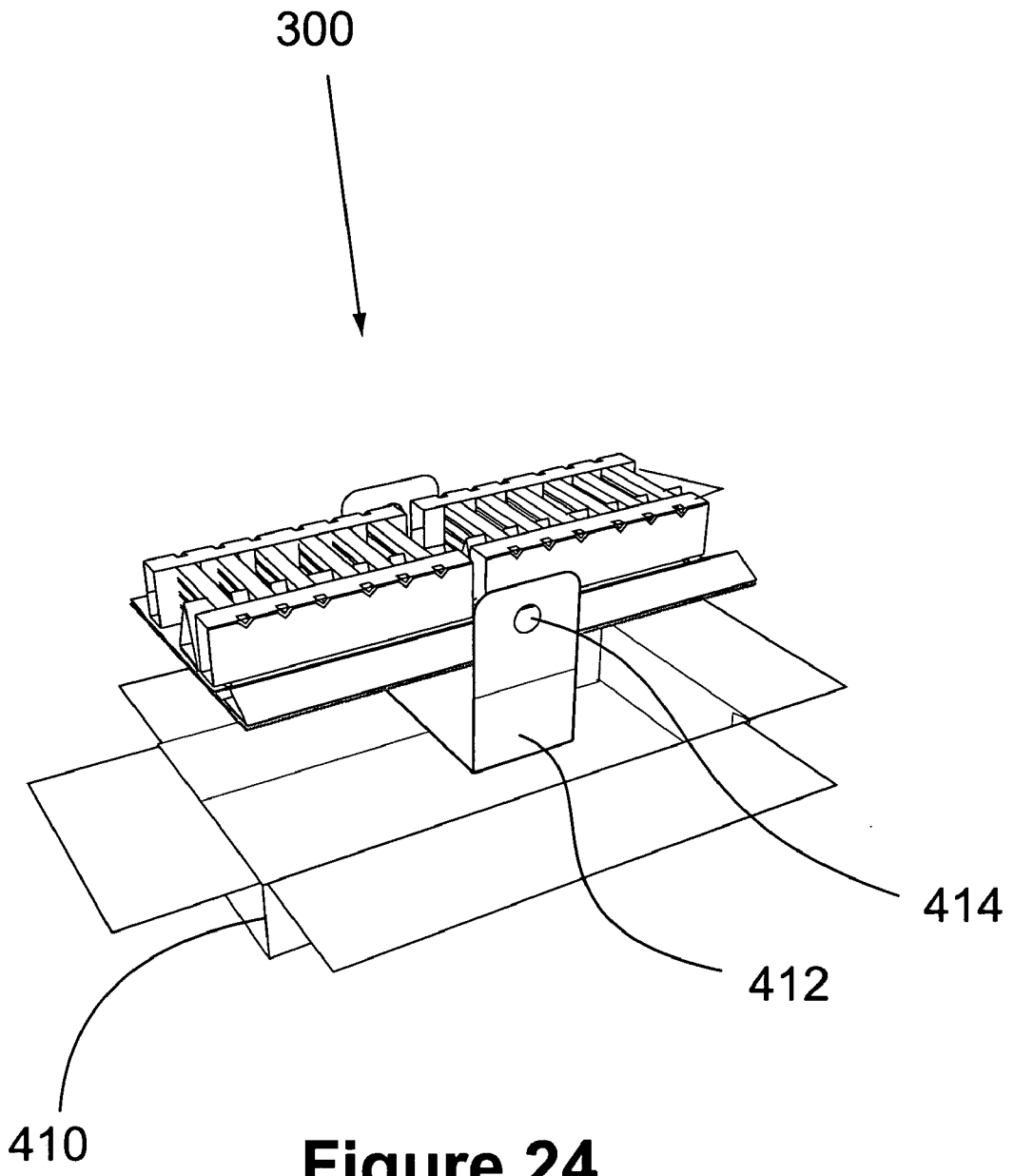

Figure 24

DISPLAY SYSTEM

RELATED APPLICATION DATA

[0001] This application claims priority to a provisional patent application No. 60/686,578 entitled Display System, filed in the U.S. Patent and Trademark Office on May 31, 2005 and which is herein incorporated by reference.

FIELD OF THE INVENTION

[0002] The invention relates to display systems, and more particularly, to self-supporting displays on which display hooks may be mounted.

BACKGROUND OF THE INVENTION

[0003] Displays for displaying products in retail stores come in all shapes and sizes. To perform their intended function, many displays require that hooks be mounted on the display. The desired products can then be mounted on the hooks and made available to the customer in this way. Many times the hooks disengage from the display under the product loads, leading to display failure. Thus, lack of stability of product-bearing display hooks is a serious problem in the industry, and a need exists for a display that is capable of supporting a variety of hooks in a firm and stabilized manner.

[0004] Moreover, regardless of the type of display, all displays must be provided with support structure for retaining the displays in an upright position so that the products on display remain in the customer's line of sight. For example, display stands are provided to elevate the displays from the floor. Other structures are used to prop displays resting on counters. These support structures, which are typically shipped with the displays, are bulky and occupy significant shipping capacity, which in turn leads to increased shipping costs. Thus, a need exists to provide a compact support structure to minimize shipping costs.

SUMMARY OF THE INVENTION

[0005] This invention addresses the problems of previous display systems by providing a display system having an improved support structure to reduce the display profile and consequent shipping costs and an improved display hook for mounting on the display grid. A support structure, such as an easel, is formed with or attached to the rear side of the display grid to support the grid in an elevated position. Unlike prior displays that must be shipped with bulky support structures, the easel of this invention is collapsible (the easel preferably collapses into a plane substantially parallel to the grid), allowing the display to retain its relatively thin profile. Thus, when the display is shipped with its associated easel in a collapsed position, more displays may be palletized in a shipping carton, resulting in reduced shipping costs. To install the display in the store, the easel may be quickly and easily formed and locked into place to support the display. The easel may be formed and collapsed as necessary, facilitating both shipping of the display as well as transporting the display in the store.

[0006] This invention also relates to an improved display hook capable of releasably engaging the grid at three locations and thereby distributing the product load carried by the hook and reducing the likelihood that the hook with be pulled from or otherwise disengage the grid. The hook may be positioned and repositioned anywhere on the grid. Moreover, if desired, a cover panel (preferably upon which product information, advertisements, or other graphics may be printed or otherwise provided) may be releasably attached to the front surface the display grid. The cover panel can easily be removed, allowing the grid, easel, and hooks of the display to be re-used with different products.

[0007] In addition to display hooks, dividers may also be mounted on the grid to help organize the products hanging from the hooks and prevent them from moving laterally and becoming entangled, which can often happen during shipping and when the display is positioned in an upright, but tilted position.

[0008] It is an object of this invention to provide a display system that includes a compact support structure, such as a collapsible easel, mounted on a display grid.

[0009] It is another object of this invention to provide a display hook for a display grid that is structured to firmly mount on a display grid and prevent unintended disengagement from the grid.

BRIEF DESCRIPTION OF THE DRAWINGS

[0010] **FIG. 1** is a front perspective view of one embodiment of the self-supporting display of this invention.

[0011] **FIG. 2** is a front elevational view of the grid of the display of **FIG. 1**.

[0012] **FIG. 3** is a rear elevational view of the grid of **FIG. 2**.

[0013] **FIG. 4** is a view taken along line **4-4** of **FIG. 2**.

[0014] **FIG. 5** is a plan view of the blank used to form the easel of **FIG. 1**.

[0015] **FIG. 6** is a perspective view of the blank of **FIG. 5** in partially folded condition.

[0016] **FIG. 7** is a perspective view of the blank of **FIG. 5** in partially folded condition.

[0017] **FIG. 8** is an exploded view of the display of **FIG. 1**.

[0018] **FIG. 9** is a rear perspective view of the display of **FIG. 1**.

[0019] **FIG. 10** is a front perspective view of one embodiment of the display hook of this invention.

[0020] **FIG. 11** is a cross-sectional view of the hook of **FIG. 10**.

[0021] **FIG. 12** is a rear perspective view of the hook of **FIG. 10**.

[0022] **FIG. 13** is a perspective view of the hook of **FIG. 10** mounted on the grid of **FIG. 1**.

[0023] **FIG. 14** is a cross-sectional view showing engagement of the hook of **FIG. 10** with the grid of **FIG. 1**.

[0024] **FIG. 15** is an exploded viewing showing attachment of one embodiment of the cover panel of this invention to the display of **FIG. 1**.

[0025] **FIG. 16** is a plan view of the blank used to form an alternative embodiment of the cover panel.

[0026] **FIG. 17** is an exploded view showing attachment of the cover panel of **FIG. 16** to the display of **FIG. 1**.

[0027] **FIG. 18** is a partially exploded view showing attachment of one embodiment of the dividers to the display of **FIG. 17**.

[0028] **FIG. 19** is a perspective view showing the display of **FIG. 18** stocked with toothbrushes.

[0029] **FIG. 20** is a plan view of the blank used to form one embodiment of the dividers of this invention.

[0030] **FIG. 21** is a perspective view of one embodiment of the filler of this invention.

[0031] **FIG. 22** is a perspective view of the filler of **FIG. 21** positioned on the stocked display of **FIG. 19**.

[0032] **FIG. 23** is a plan view of the blank used to form the filler of **FIG. 21**.

[0033] **FIG. 24** is a perspective view showing the display of **FIG. 22** loaded into a shipping carton with one embodiment of the carrier of this invention.

DETAILED DESCRIPTION OF THE PREFERRED EMBODIMENTS

[0034] **FIG. 1** shows one embodiment of the self-supporting display **300** of this invention. The display **300** may be provided in any desired dimensions and may be placed on any surface, including atop a counter or on a floor. The display **300** includes a rack or grid **302** and a support structure, such as easel **304**, for elevating and supporting the grid **302** in an upstanding position.

[0035] One embodiment of grid **302** is shown in **FIGS. 2-4**. As seen in **FIGS. 2 and 3**, grid **302** is comprised of a plurality of horizontal ribs **306** intersected by a plurality of vertical ribs **308** to form a plurality of slots or apertures **310** for receiving product bearing hooks therein, as will be discussed. Ribs **306**, **308** can be enclosed by a peripheral frame **312** to strengthen the stability of the grid **302** and prevent damage during shipping and use. Moreover, any of the sides of the grid **302** may be provided with elongated slots (such as elongated slots **16** disclosed in U.S. patent application Ser. No. 09/942,057, filed Aug. 28, 2001 and entitled "Display Rack and Hook Combination," the entirety of which is herein incorporated by this reference).

[0036] While grid **302** may be formed from any material exhibiting structural integrity, such as plastic, metal, wood, etc., forming the grid **302** from a molded plastic has proven particularly cost-effective. Moreover, any size grid **302** may be used in the display and any number of apertures **310** may be provided in the grid **302**. Apertures **310** need not be rectilinear, but rather may be formed of any shape capable of receiving and retaining the display hooks, screws, and other fasteners discussed below. Moreover, apertures **310** of different dimensions and/or shapes may be provided in the same grid **302**.

[0037] As shown in **FIG. 4**, horizontal ribs **306** preferably have an upper portion **314** and a lower portion **316** narrower than the upper portion **314**. In this way, a ridge **318** is formed on the underside of the upper portion **314**. This ridge **318** helps to retain hooks for displaying products, as will be explained below. Depending on the desired orientation of the display hooks on the grid, ridges **318** may be provided on either or both of horizontal and vertical ribs **306**, **308**.

[0038] The embodiment of **FIG. 1** includes a support structure in the form of easel **304** attached to the rear side of grid **302** to support the grid **302** in an elevated position. The easel **304** may elevate and support the grid **302** completely vertically but, as shown in **FIG. 1**, may also position and retain the grid **302** at an incline. While not necessary, maximum display support may be realized if the easel **304** has similar dimensions (i.e., height and width) to those of the grid **302**.

[0039] The easel **304** may be formed of any material rigid enough to support a product-laden grid **302**, such as plastic, metal, wood, or certain types of paper. Easel **304** may even be integrally formed with grid **302**. However, reduced manufacturing and shipping costs may be realized by forming the easel **304** from suitably rigid paperboard, such as corrugated board. In this way, a blank used to form the easel (such as the easel blank **320** shown in **FIG. 5**) may be easily and quickly stamped from the board and attached to the rear side of the grid **302**. Moreover, materials such as corrugated board are printable and thus information and/or decorative designs may be provided on the easel **304**.

[0040] One embodiment of the easel **304** is shown in **FIGS. 1 and 5-8**. **FIG. 5** illustrates an easel blank **320** for folding and attaching to the rear side of grid **302**, dashed lines a-d indicating the folds for forming the easel **304**. The easel blank **320** includes side mounting portions **322** attached to first side wings **324** which are attached to second side wings **326** which are in turn attached to the central body **328** of the easel **304**. The central body **328** includes an upper portion **330** including a foldable lip **332** and a lower portion **334** with a foldable ledge **336**. To form the easel **304**, the second side wings **326** are folded along dashed line a in direction A (see **FIGS. 5 and 6**). The first side wings **324** are then folded relative to the second side wings **326** along dashed line b in direction B (see **FIGS. 5 and 7**). The foldable lip **332** (which need not be provided on the easel, but can contribute to the structural integrity of the easel) is folded down along dashed line c (**FIG. 5**), and the easel blank is ready for mounting on the grid **302**.

[0041] The easel blank **320** is positioned on the grid **302** in the desired location and secured in place with any of a variety of mounting means, including glue and screws, bolts, nails, clips or other types of fasteners. Screws (especially clear plastic screws which are not as noticeable) have proven particularly useful in this application as they are cheap and may be installed quickly. After the easel blank **320** is positioned on the grid **302**, screws **400** are simply inserted through the side mounting portions **322** and into the grid apertures **310** (if the screws **400** are entering from the rear side of the grid **302**) or into the grid apertures **310** and through the side mounting portions **322** (if the screws **400** are entering from the front side of the grid **302**, as shown in **FIG. 8**) to secure the easel blank **320** to the grid **302**. Naturally, the screws must be sized to be retained in the apertures **310**. The screws may be received in any of the plurality of apertures **310**, enabling the easel blank **320** to be positioned in a variety of locations on the grid **302**. Moreover, any number of screws (limited, of course, by the number of apertures **310** on grid **302**) may be used to firmly secure the easel blank **320** to the grid **302**. Pre-cut screw

holes **338** may be provided in the side mounting portions **322** of the easel blank **320** to help the display assembler align the easel blank **320** with the apertures **310** and to obviate the need to drive the screws through the easel blank material.

[**0042**] After attachment, the easel blank **320** may be easily formed into the easel **304**. To do this, the first and second wings **324**, **326**, which are currently collapsed into an fan-like structure, are extended outwardly (such as through use of a handhold cut-out **340** that can be, but does not have to be, provided in the easel blank **320**) and the ledge **336** of the lower portion **334** of the central body **328** is bent along dashed line d in direction C and folded inwardly (see **FIGS. 5 and 9**). Teeth **342** having indentations **344** and peeks **346** are provided on the upper edge of ledge **336**. The indentations **344** engage the vertical ribs **308** while the peeks **346** are able to rest upon the horizontal ribs **306** to hold the ledge **336** in place relative to the grid **302**. In this way, the easel blank **320** is formed into an easel **304** and retained in that form to support the grid **302**. The easel **304** may easily be collapsed by merely folding the ledge **336** upwardly to disengage the teeth from the grid and collapsing the first and second wings **324**, **326**.

[**0043**] Display hooks for hanging products on grid **302**, including those disclosed in U.S. patent application Ser. No. 09/942,057, may be mounted on grid **302**. **FIGS. 10-14** illustrate an alternative display hook **348** for use on display **300**. Display hook **348** is preferably molded from plastic and includes a base **350** and an elongated support member **352** extending from the base **350**.

[**0044**] The base **350** includes a front surface **354** and a rear surface **356**. Support member **352**, which can be provided in any desired length, extends from the front surface **354** of base **350** and is preferably angled slightly upwardly. Support member **352** preferably includes an upturned portion **358** at its outer end. Products for sale can be mounted on the support member **350**, whose upward angling and upturned portion **358** facilitates retention of the product on display hooks **348**. Gussets **360** may also be provided at the juncture of support member **352** and base **350** to increase the support member's load-bearing capacity.

[**0045**] Base **350** is preferably, but does not have to be, dimensioned so as to cover substantially the entirety of adjacent apertures **310** when the display hook **348** is mounted on grid **302**. For example, when the hook **348** is mounted on the grid **302**, the base **350** may cover nine apertures **310**, three across and three down (see **FIG. 13**). Of course, the base **350** need not be rectilinear, but can be formed in other shapes provided that structure for engaging the grid **302** may still be accommodated on base **350**.

[**0046**] Structure for engaging the grid **302** is provided on the rear surface **356** of base **350**. As seen in **FIGS. 11 and 12**, a hook portion **362** having a substantially vertical lip **364** extends from the upper end of rear surface **356** of base **350**. At least one prong **366** extends from the lower end of the rear surface **356** of the base **350**. A downward opening recess **368** is formed between the prong **366** and the rear surface **356** of the base **350**. While only one prong **366** need be used, the hook **348** preferably includes at least two prongs **366** (see, e.g., **FIG. 12**) to facilitate retention of the hook **348** in apertures **310**. Hook portion **362** and prongs **366** are preferably distributed on the rear surface **356** of the base **350** so that when the hook **348** is mounted on grid **302**, they will best distribute the load of the products supported by the hook **348** and thus resist disengagement of the hook **348** from the grid **302** under such loads. One example of such distribution is illustrated in **FIG. 12**, where the hook portion **362** is positioned in the upper middle of the rear surface **356** of base **350** and each prong **366** is distributed in a lower corner of the rear surface **356** of the base **350** so as to form a triangular pattern on the rear surface **356** of the base **350**. The hook portion **362** and prongs **366** are positioned on the rear surface **356** of the base **350** so that each will align with an aperture **310** in the grid **302** during hook **348** installation. In this way, the hook **348** is engaged to the grid **302** in three separate locations.

[**0047**] Any number of hooks **348** can be mounted on grid **302** between adjacent horizontal and vertical ribs **306**, **308**. To install the hook **348** on the grid **302**, hook portion **362** enters aperture **310**. The lip **364** of hook portion **362** engages the ridge **318** of one of the horizontal ribs **306** so that the lip **364** is substantially parallel to and abuts the ridge **318**. Prongs **366** snap-fit into an aperture **310** (each preferably at least one aperture removed from the aperture into which hook portion **362** extends and preferably at least one aperture removed from each other) so that the recess **368** surrounds the upper portion **314** of other of the horizontal ribs **306**. Through engagement of hook portion **362** and prongs **366** with horizontal ribs (or vertical ribs **308** if it is desired to suspend the hooks **348** so that they are rotated 90 degrees), hook **348** is firmly secured to grid **302**. Moreover, the hooks **348** can quickly and easily be removed from and repositioned on the grid **302**.

[**0048**] It may be aesthetically desirable to hide the front side of the grid **302** by attaching a cover panel **370** to the front side of the grid **302** (see **FIG. 15**). The cover panel **370** may be made from any material, but preferably is made of a material that is capable of being printed, such as cardboard or paperboard which have proven to be the most cost-effective. In this way, the cover panel **370** can be printed with desirable graphics to correspond to the product to be displayed and then die-cut and mounted on the grid. As will be obvious to one of skill in the art, the cover panel **370** may be provided in any shape (not just rectilinear) and size, although it often may be desirable for the cover panel **370** to have the same dimensions as the grid **302** so as to cover the entirety of the grid.

[**0049**] As with the easel **304**, the cover panel **370** can be mounted on the grid **302** in any of a variety of ways but screws have proven to be the easiest and most cost-effective way. Indeed, if a cover panel **370** is used, the same screws or fasteners **400** that secure the cover panel **370** to the grid **302** may be used (but do not have to be used) to secure the easel **304** to the grid **302**, as shown in **FIG. 15**. While metal screws could be used, clear plastic screws are preferable as they essentially disappear on the display **300** façade. Screw cut-outs **372** may be stamped from the cover panel **370** during manufacture to assist the display assembler in positioning the cover panel **370** on the grid **302**. As discussed above, corresponding screw cut-outs **338** may be provided on the easel blank **320** to assure alignment of the cover panel **370**, grid **302**, and easel **304**. Hook cut-outs **374** are also provided on the cover plate **370** to accommodate the desired number of hooks to be used with the display **300**.

[0050] Because the screws are easily removable, the cover panel **370** can easily be replaced when desirable by simply removing the screws and substituting the old cover panel for a new cover panel. In this way, the grid **302**, easel **304**, and hooks **348** of the display **300** are entirely re-usable with different products.

[0051] While the cover panel **370** may be completely flush with the front side of the grid **302**, as shown in **FIG. 15**, the cover panel **370** may be provided with structure to impart a three-dimensional look to the cover panel **370**. **FIGS. 16 and 17** illustrates a cover panel blank **375** for imparting a sloped surface **376** to the front surface of the cover panel **370**. The sloped surface **376** is formed by an upper portion **378**, middle portion **380**, and lower portion **382**. During cover panel **370** installation, the upper portion **378** is bent outwardly along dashed line e, the middle portion **380** is bent inwardly along dashed line f, and the lower portion **382** is bent upwardly along dashed line g so that it is flush with the plane of the grid **302**. Screws or other fastening means **400** are then used to secure the lower portion **382** to grid **302**, as shown in **FIG. 17**.

[0052] In addition to display hooks **348**, it may be desirable to provide additional structure on the display **300** to help organize the products hanging from the hooks **348** and prevent them from moving laterally and becoming entangled, which can often happen during shipping and when the display **300** is positioned in an upright, but tilted position. In **FIGS. 18 and 19**, dividers **384** are provided to perform this function. Products, such as toothbrushes **386**, can hang from the hooks **348** and extend in slots **388** formed between adjacent dividers **384**. In the embodiment shown in **FIGS. 18 and 19**, the dividers **384** are triangles extending from the display **300**. However, the dividers **384** may be provided in any shape. Moreover, while each divider **384** may be provided and attached separately to the display **300**, it saves time and ensures that the dividers **384** are properly spaced on the display **300** if at least some of the dividers **384** are integrally formed.

[0053] The dividers **384** may be made from any material suitably rigid to serve effectively as a barrier between adjacent products on the display **300**, but are preferably made from plastic (such as polyvinylchloride) which is relatively cheap and more preferably from a clear plastic, which allows the dividers **384** essentially to disappear into the display **300** façade and thus not interrupt the graphical flow provided on the cover panel **370**. Plastic sheets may be stamped into the divider blank **389** shown in **FIG. 20**, which, in turn, may be folded to create the dividers **384**. Fastener cut-outs **390** are provided in the divider blank **389**, as are slot cut-outs **392** that create the slots **388** between adjacent dividers **384**. While divider blank **389** is provided with seven dividers **384**, any number of dividers **384** may be provided in a divider blank **389**. To form the dividers **384** from the divider blank **389**, divider blank **389** is folded along dashed lines h-j so as to form an apex along dashed line i and so that each fastener cut-out **390** provided on the top of the blank **389** is aligned with and abuts the corresponding fastener cut-out **390** on the bottom of the blank **389**. Fasteners or other securing means **400** may then be threaded through the fastener cut-outs **390** and snapped in apertures **310** of grid **11** at any location, as shown in **FIG. 17**.

[0054] After the easel **304**, hooks **348**, cover panel **370** (if desired), and dividers **384** (if desired) are mounted on the grid **302**, the display **300** is ready to be stocked with product and shipped. While assembly of the display **300** may be done on site at the store, the benefits of this invention are fully realized when the display **300** is fully-stocked prior to shipping. Unlike prior displays that must be shipped with bulky support structures, display **300** includes a collapsible support structure, easel **304**, that enables the display **300** to be shipped flat on its back (see **FIG. 24**). Given their low profile, more displays **300** may be palletized in a shipping carton, resulting in reduced shipping costs.

[0055] If the display **300** is stocked with product prior to shipment, it may be desirable to further stabilize the products before shipment. **FIGS. 21 and 22** show one device (fillers **394**) for stabilizing toothbrushes **386** loaded on the display **300**. However, the fillers **394** may be designed to accommodate any product to be displayed on display **300**. For use with toothbrushes **386**, fillers **394** include partitions **396** that define cavities **398** for receiving the heads or handles of the packaged toothbrushes **386**. The fillers **394** slide between the heads and/or feet of the toothbrushes, as shown in **FIG. 22**. Holes **400** accommodate the support members **352** (particularly the upturned portion **358**) of display hooks **348**. The fillers **394** are preferably made from a material suitably rigid to serve effectively as a barrier between adjacent products on the display **300**, such as plastic or cardboard. In this way, the partitions **396** are able to help prevent lateral movement of the products while the front face **402** of the filler **394** prevents the products from dismounting from the display hooks **348**.

[0056] **FIG. 23** shows one embodiment of a filler blank **404** that may be formed into the fillers **394** shown in **FIGS. 21 and 22**. To form a filler **394**, the filler blank **404** is folded along folding lines k-n to form a substantially rectangular structure so that the lower panel **406** abuts the upper panel **408**. The lower and upper panels **406**, **408** are preferably fixed together, such as with glue or a staple, so that the filler **394** retains its shape. The filler **394** can then be used to pack the display **300** for shipping.

[0057] To ship a display **300**, the fully-stocked display **300** is first placed in a shipping carton **410**. As shown in **FIG. 24**, one or more carriers **412** may be used to support the display **300** during packing. The carrier **412**, which may be made from any material sufficiently strong to support a stocked display **300**, may include hand cut-outs **414** for the packer to grip. The carrier(s) **412** is preferably left in the shipping carton **410** to help display **300** removal at the store.

[0058] The foregoing is provided for purposes of illustrating, explaining, and describing embodiments of the present invention. Further modifications and adaptations to these embodiments will be apparent to those skilled in the art and may be made without departing from the scope or spirit of the invention.

We claim:

1. A self-supporting display system comprising:

a. a grid having a height and a width and comprising:

i) a plurality of horizontal ribs;

ii) a plurality of vertical ribs;

iii) apertures formed between adjacent horizontal and vertical ribs;

iv) a front side; and

v) a rear side; and

b. a support structure attached to the rear side of the grid, wherein the support structure is adapted to assume an

extended position whereby the support structure supports the grid in an elevated position and to assume a collapsed position whereby the support structure collapses into a plane substantially parallel to the rear side of the grid.

2. The self-supporting display system of claim 1, wherein the grid further comprises a peripheral frame.

3. The self-supporting display system of claim 1, wherein the grid comprises plastic.

4. The self-supporting display system of claim 1, wherein at least one of the horizontal ribs comprises an upper portion having an underside and a lower portion narrower than the upper portion and extending from the underside of the upper portion, wherein a ridge is formed on the underside of the upper portion.

5. The self-supporting display system of claim 1, wherein the support structure comprises an easel.

6. The self-supporting display system of claim 5, wherein the easel comprises paperboard.

7. The self-supporting display system of claim 5, wherein the easel is attached to the grid with at least one fastener positioned in a grid aperture.

8. The self-supporting display system of claim 5, wherein the easel comprises a central body comprising a height and a width substantially identical to the height and the width of the grid.

9. The self-supporting display system of claim 5, wherein the easel comprises a plurality of side wings adapted to extend for the easel to assume the extended position and adapted to fold for the easel to assume the collapsed position.

10. The self-supporting display system of claim 9, wherein the easel comprises side mounting portions for attaching the easel to the rear side of the grid, first side wings proximal the side mounting portions, and second side wings proximal the first side wings and adjacent to a central body.

11. The self-supporting display system of claim 5, wherein the easel comprises a central body having a ledge comprising teeth for engaging the grid when the easel assumes the extended position.

12. The self-supporting display system of claim 1, further comprising:

c. at least one removable display hook comprising:

i) a base having a front surface and a rear surface;

ii) an elongated support member extending from the front surface of the base;

iii) a hook portion provided on the rear surface of the base, wherein the hook portion defines a substantially vertical lip;

iv) at least one prong provided on the rear surface of the base; and

v) at least one recess formed between the at least one prong and the rear surface of the base.

13. The self-supporting display system of claim 12, wherein the elongated support member comprises an upturned portion on an end distal the base.

14. The self-supporting display system of claim 12, wherein the at least one prong comprises at least two prongs.

15. The self-supporting display system of claim 12, wherein a plurality of the horizontal ribs each comprises an upper portion wider than a lower portion and having an underside and wherein, when the display hook is mounted on the front side of the grid, the hook portion engages one of the horizontal ribs so that the lip of the hook portion abuts a portion of the underside of the upper portion of a horizontal rib.

16. The self-supporting display system of claim 15, wherein, when the display hook is mounted on the front side of the grid, the at least one recess at least partially surrounds the upper portion of a horizontal rib.

17. The self-supporting display system of claim 1, further comprising a cover panel releasably attached to the front side of the grid.

18. The self-supporting display system of claim 17, wherein the cover panel comprises a height and a width substantially identical to the height and the width of the grid.

19. The self-supporting display system of claim 1, further comprising display hooks mounted on the front side of the grid for supporting products and organizing means positioned between products supported on adjacent display hooks.

20. A self-supporting display system comprising:

a. a plastic grid comprising:

i) a plurality of horizontal ribs, each comprising an upper portion having an underside and a lower portion narrower than the upper portion and extending from the underside of the upper portion, wherein a ridge is formed on the underside of the upper portion;

ii) a plurality of vertical ribs;

iii) apertures formed between adjacent horizontal and vertical ribs;

iv) a front side; and

v) a rear side;

b. an easel attached to the rear side of the grid, wherein the easel is adapted to assume an extended position whereby the easel supports the grid in an elevated position and to assume a collapsed position whereby the easel collapses into a plane substantially parallel to the rear side of the grid; and

c. at least one display hook removably mountable on the grid comprising:

i) a base having a front surface and a rear surface;

ii) an elongated support member extending from the front surface of the base;

iii) a hook portion provided on the rear surface of the base, wherein the hook portion defines a substantially vertical lip;

iv) at least two prongs provided on the rear surface of the base; and

v) at least one recess formed between each of the at least two prongs and the rear surface of the base,

wherein, when the display hook is mounted on the front side of the grid, the hook portion engages one of the horizontal ribs so that the lip of the hook portion abuts the ridge formed on the underside of the upper portion of the horizontal rib and the at least one recess at least partially surrounds the upper portion of a horizontal rib.

* * * * *