(No Model.) 23 Sheets—Sheet 1.

J. BENNOR.

CIRCULAR KNITTING MACHINE.

No. 456,372. Patented July 21, 1891.

Fig. 1.

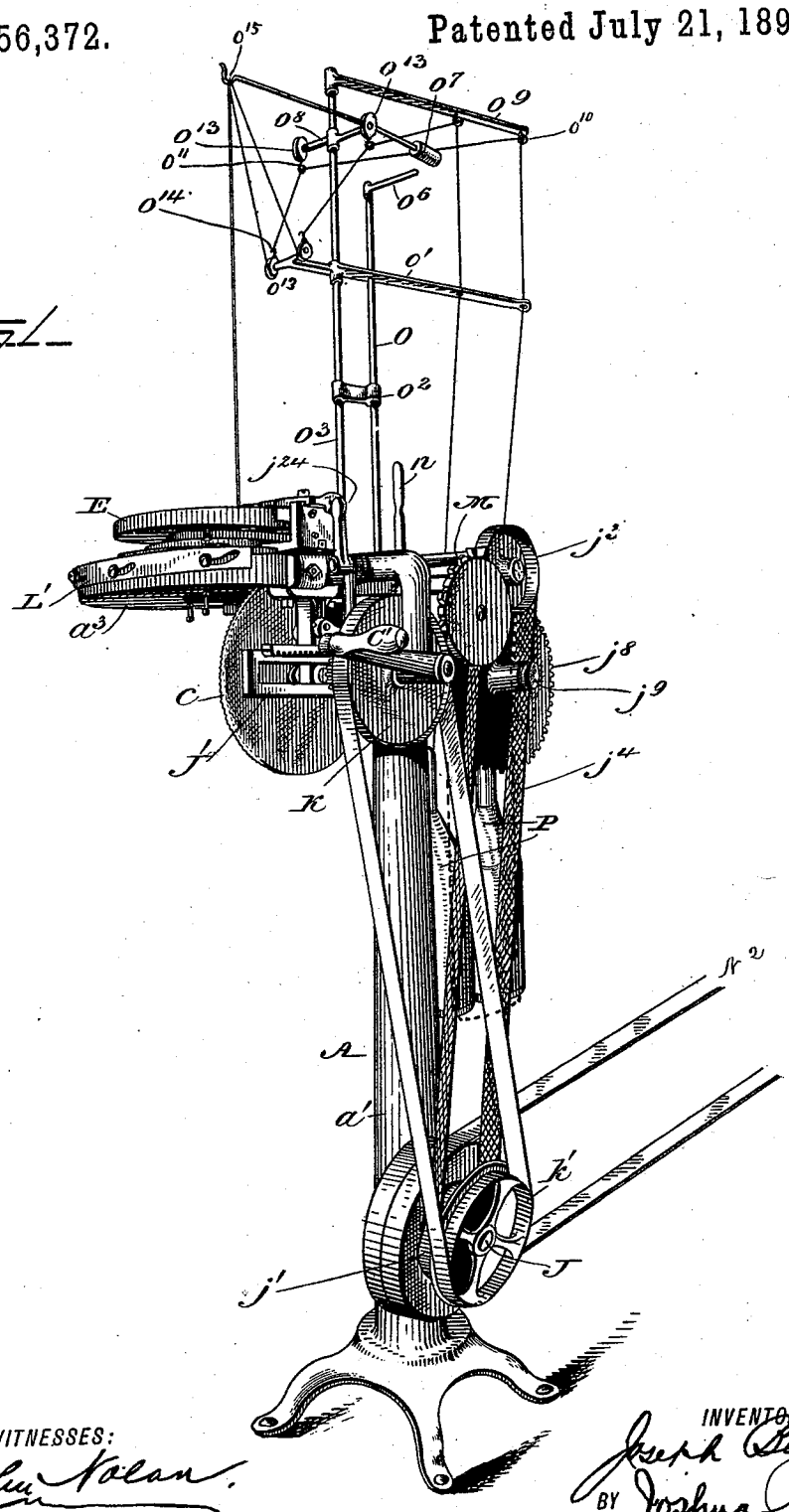

WITNESSES:

John Nolan.

Wm. W. Collet

INVENTOR

Joseph Bennor,

BY Joshua Pusey

ATTORNEY

THE NORRIS PETERS CO., PHOTO-LITHO., WASHINGTON, D. C.

(No Model.)

23 Sheets—Sheet 2.

J. BENNOR.

CIRCULAR KNITTING MACHINE.

No. 456,372.

Patented July 21, 1891.

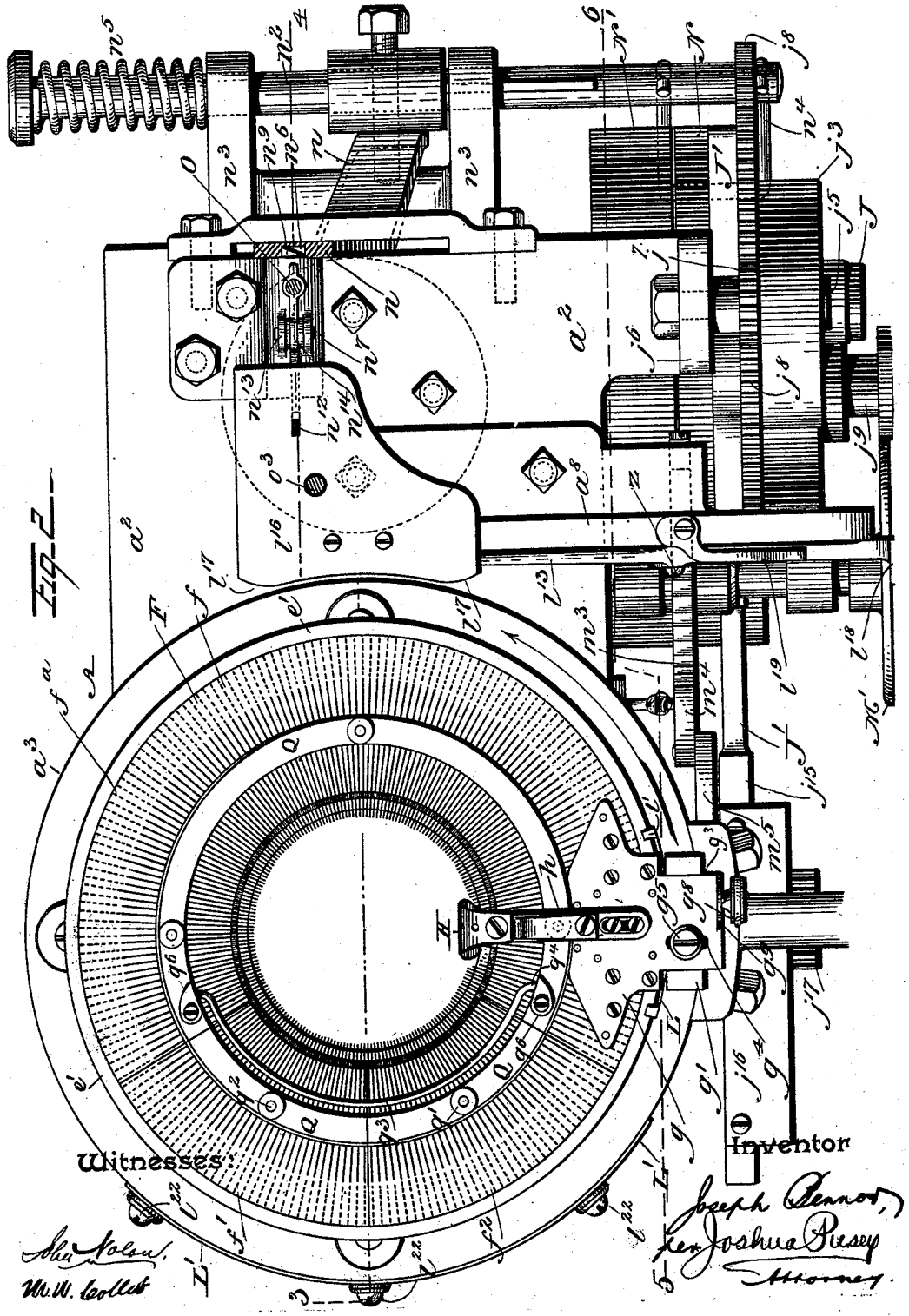

Witnesses:

Inventor

Joseph Bennor,
per Joshua Pusey
Attorney.

THE NORRIS PETERS CO., PHOTO-LITHO., WASHINGTON, D. C.

(No Model.) 23 Sheets—Sheet 3.

J. BENNOR.

CIRCULAR KNITTING MACHINE.

No. 456,372. Patented July 21, 1891.

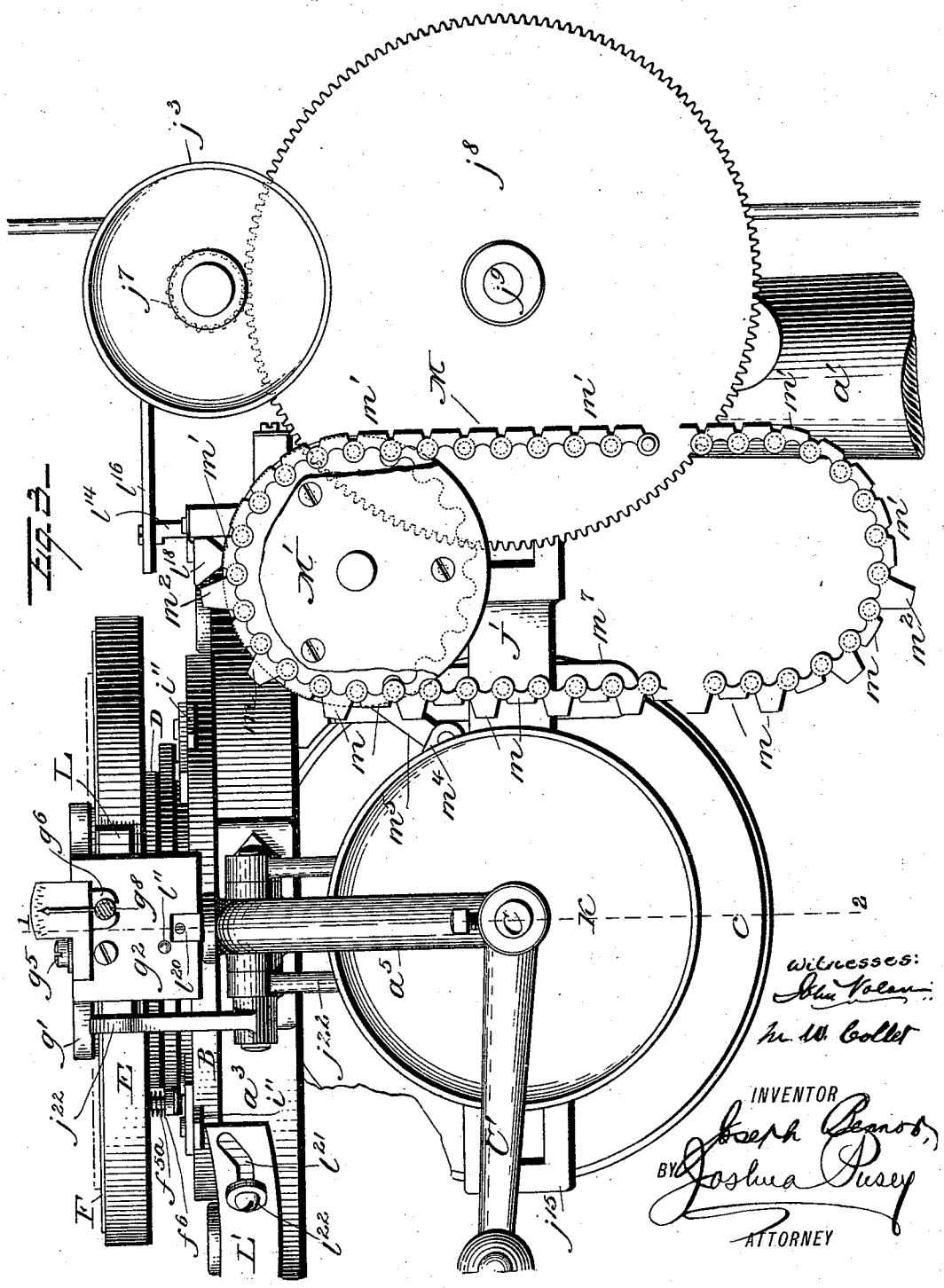

THE NORRIS PETERS CO., PHOTO-LITHO., WASHINGTON, D. C.

(No Model.) 23 Sheets—Sheet 4.

J. BENNOR.

CIRCULAR KNITTING MACHINE.

No. 456,372. Patented July 21, 1891.

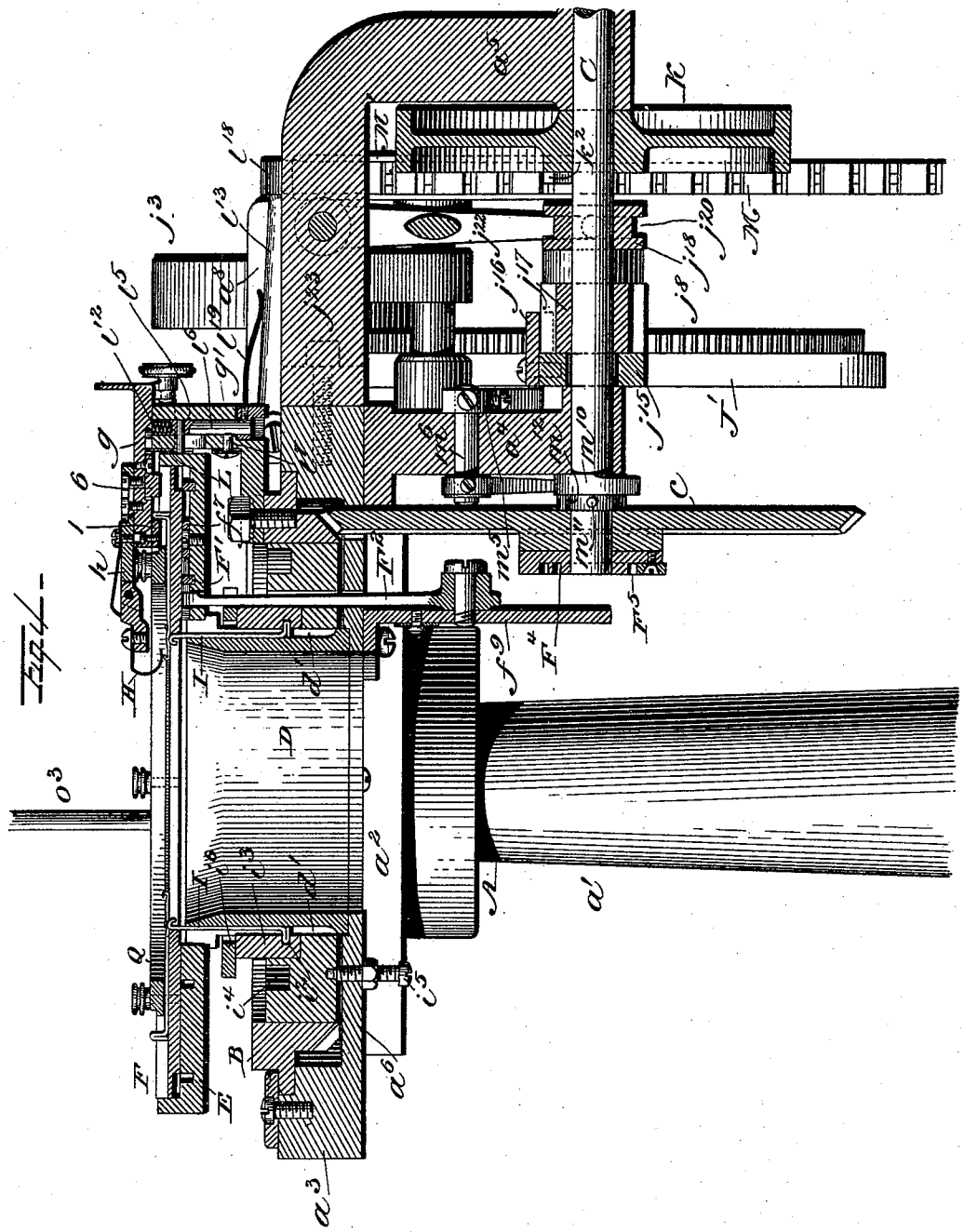

WITNESSES:

Chas. Nolan

Wm. Corlett

INVENTOR

Joseph Bennor,

BY Joshua Pusey,

ATTORNEY

THE NORRIS PETERS CO., PHOTO-LITHO., WASHINGTON, D. C.

(No Model.) 23 Sheets—Sheet 5.

J. BENNOR.

CIRCULAR KNITTING MACHINE.

No. 456,372. Patented July 21, 1891.

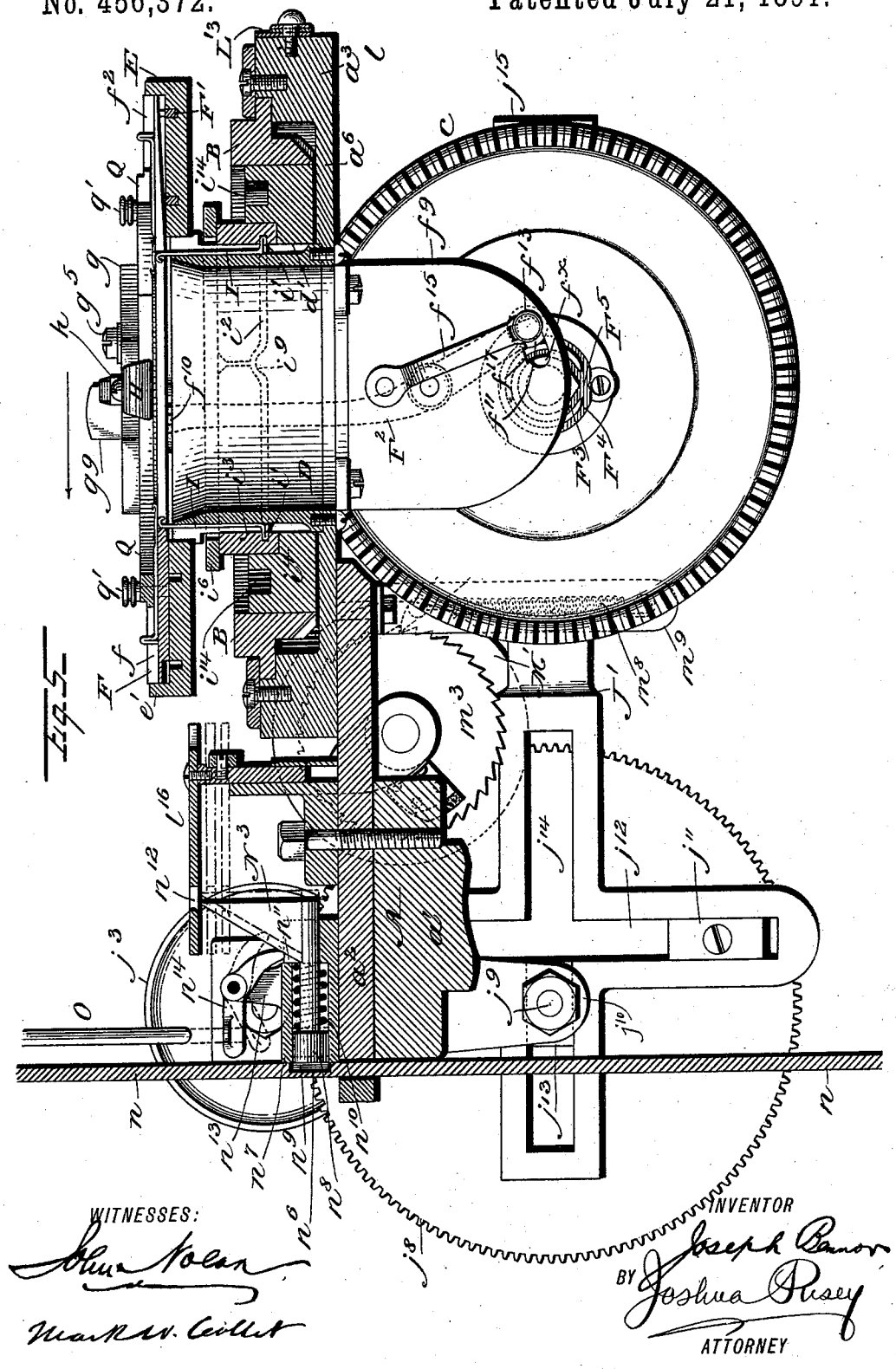

Fig. 5.

WITNESSES:

John Nolan

Mark W. Collett

INVENTOR

Joseph Bennor

BY Joshua Pusey

ATTORNEY

THE NORRIS PETERS CO., PHOTO-LITHO., WASHINGTON, D. C.

(No Model.) 23 Sheets—Sheet 6.

J. BENNOR.

CIRCULAR KNITTING MACHINE.

No. 456,372. Patented July 21, 1891.

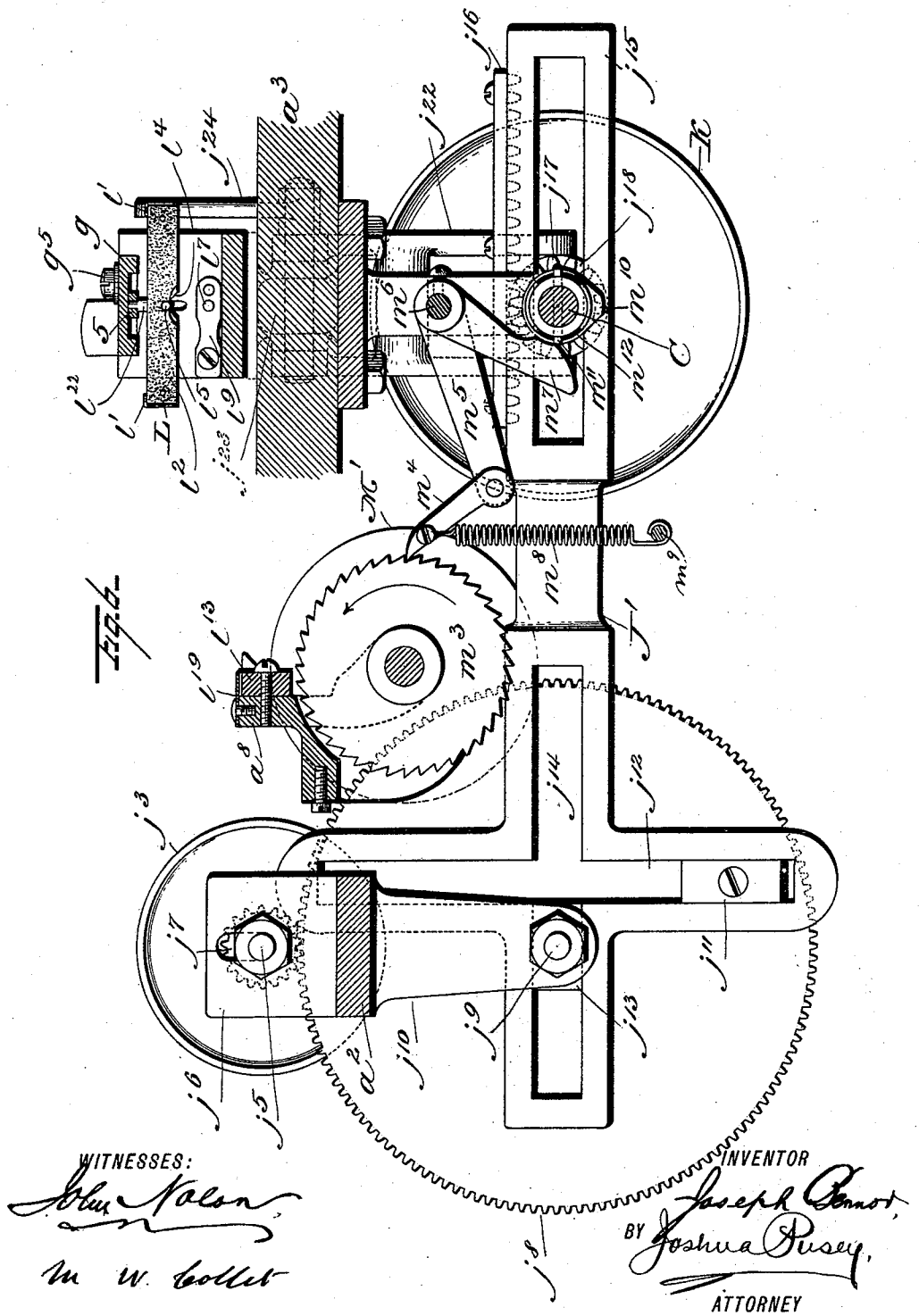

WITNESSES:

John Nolan

M. W. Collier

INVENTOR

Joseph Bennor,

BY Joshua Pusey,

ATTORNEY

THE NORRIS PETERS CO., PHOTO-LITHO., WASHINGTON, D. C.

(No Model.)

23 Sheets—Sheet 7.

J. BENNOR.

CIRCULAR KNITTING MACHINE.

No. 456,372.

Patented July 21, 1891.

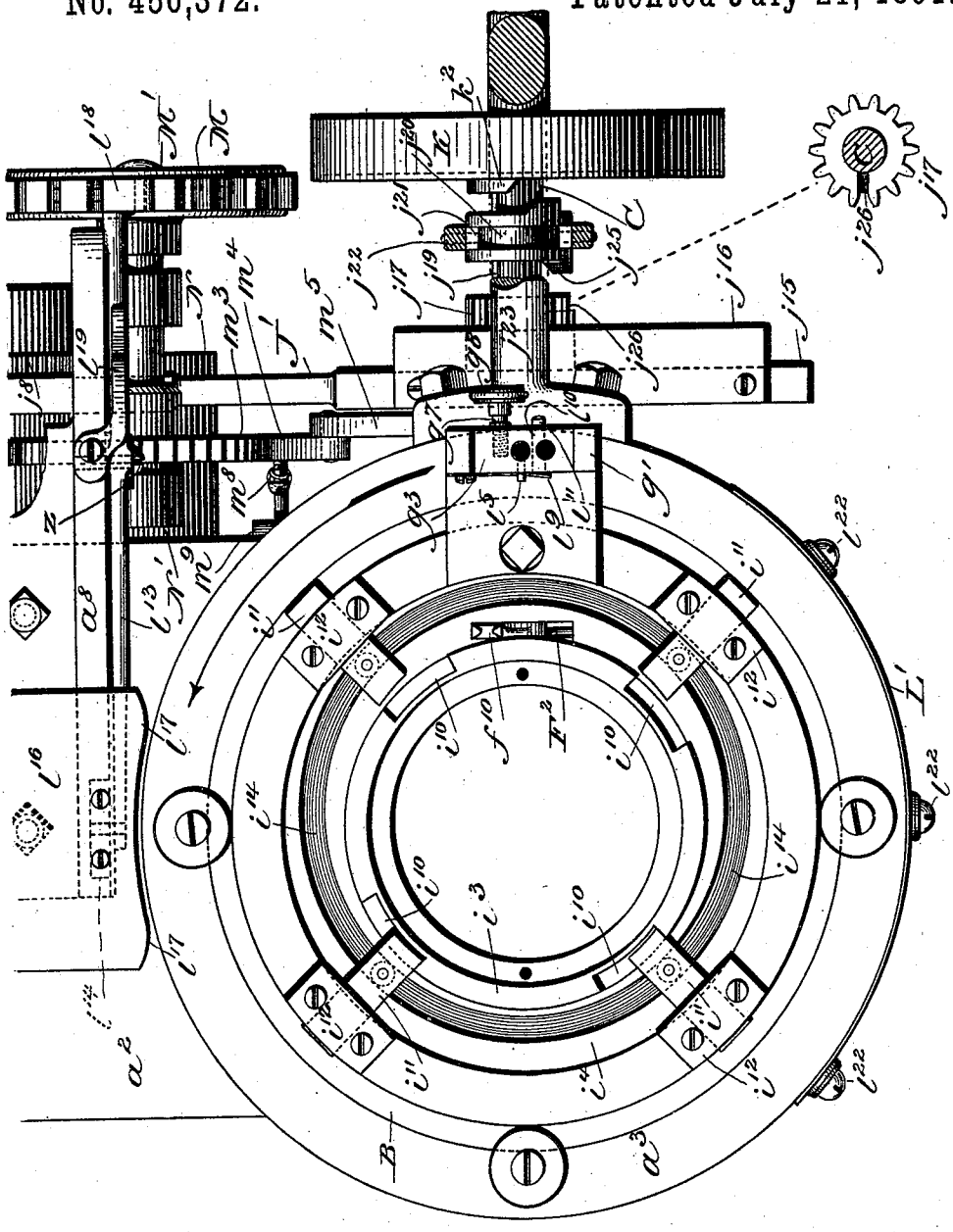

Fig. 7

WITNESSES:

John Nolan

M. W. Collet

INVENTOR

Joseph Bennor

BY Joshua Pusey,

ATTORNEY

THE NORRIS PETERS CO., PHOTO-LITHO., WASHINGTON, D. C.

(No Model.) 23 Sheets—Sheet 8.

J. BENNOR.

CIRCULAR KNITTING MACHINE.

No. 456,372. Patented July 21, 1891.

Fig. 8.

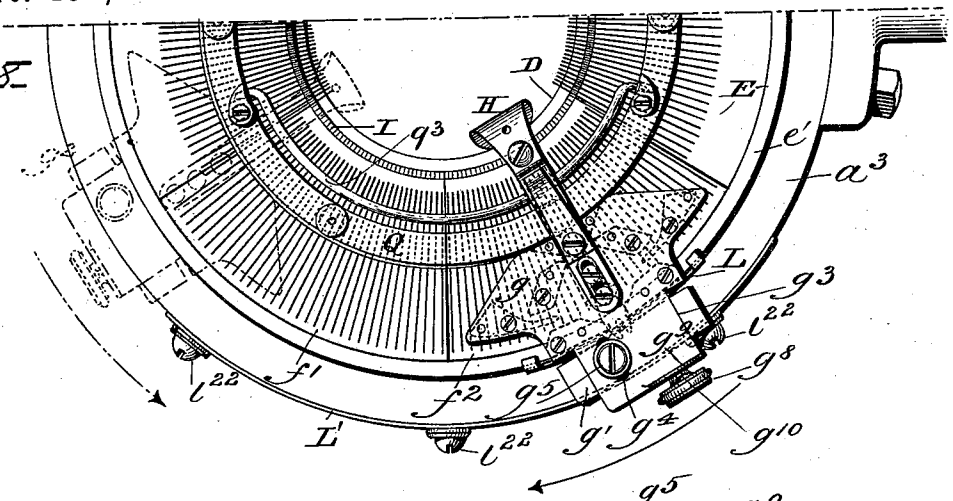

Fig. 9.

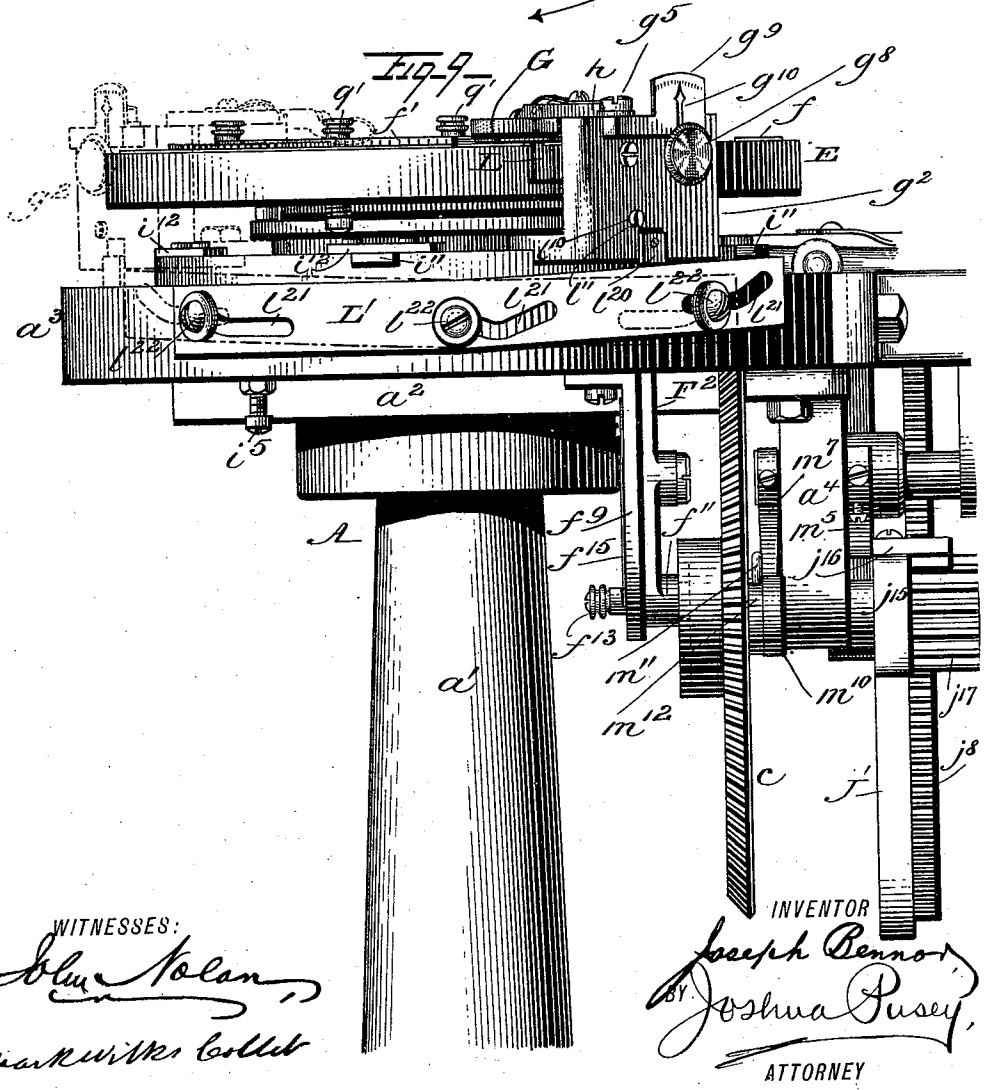

WITNESSES:

John Nolan,

Mark Wilks Collett

INVENTOR

Joseph Bennor

BY Joshua Pusey,

ATTORNEY

THE NORRIS PETERS CO., PHOTO-LITHO., WASHINGTON, D. C.

(No Model.)

23 Sheets—Sheet 9.

J. BENNOR.

CIRCULAR KNITTING MACHINE.

No. 456,372. Patented July 21, 1891.

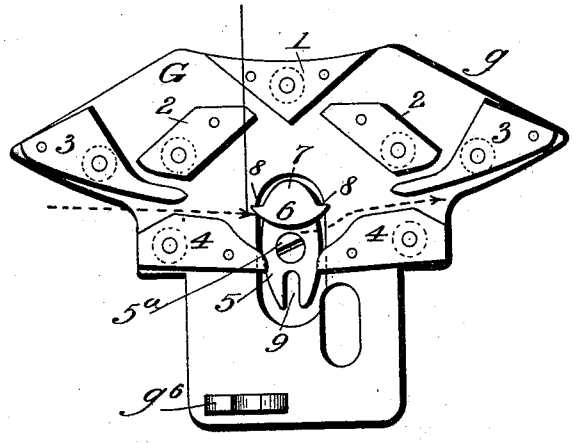

Fig. 10.

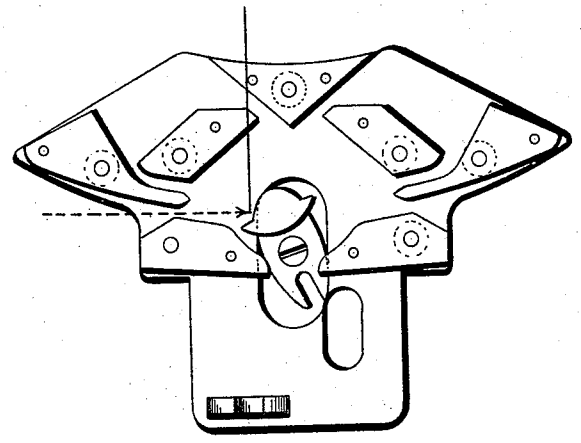

Fig. 10a.

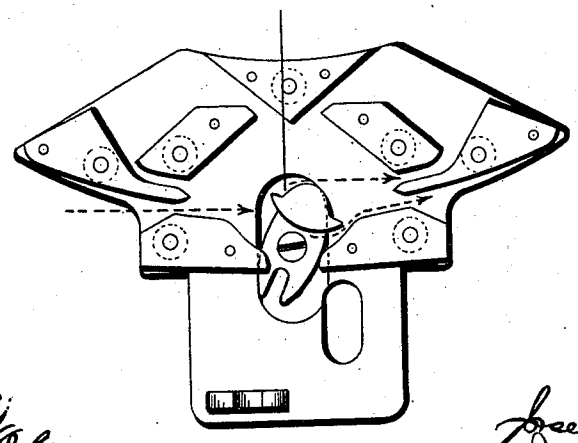

Fig. 10b.

WITNESSES:

John Nolan

Markewitz Collier

INVENTOR

Joseph Bennor

BY Joshua Pusey

ATTORNEY

THE NORRIS PETERS CO., PHOTO-LITHO., WASHINGTON, D. C.

(No Model.) 23 Sheets—Sheet 10.

J. BENNOR.

CIRCULAR KNITTING MACHINE.

No. 456,372. Patented July 21, 1891.

Fig. 12.

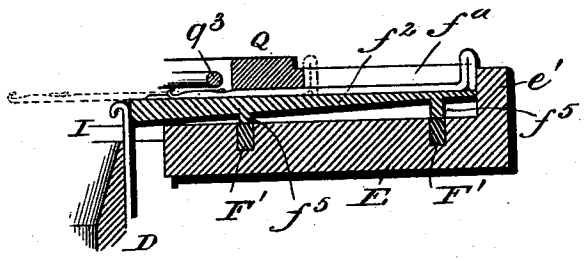

Fig. 12a.

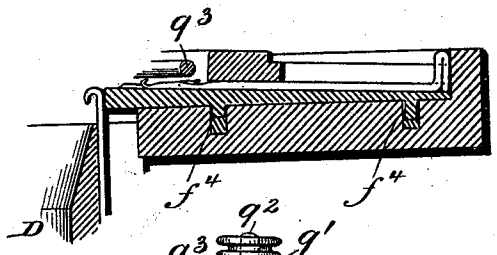

Fig. 11.

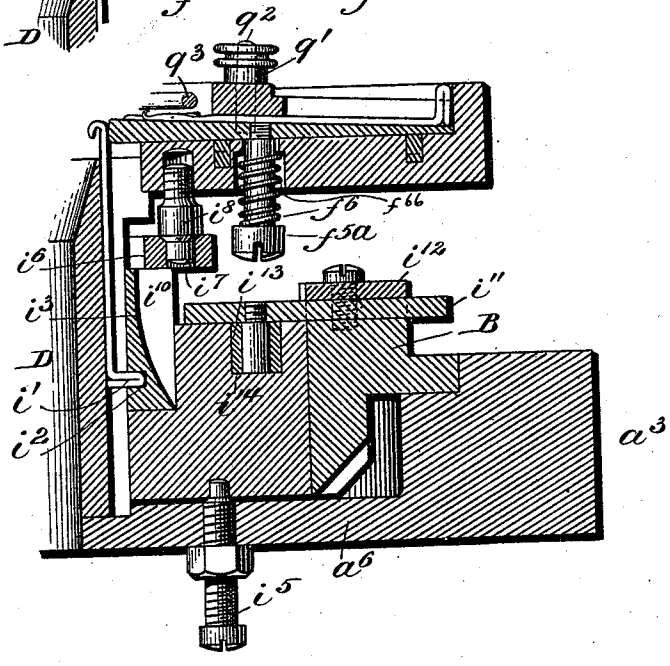

Witnesses:
John Nolan
W. W. Collier

Inventor:
Joseph Bennor,
By Joshua Pusey
Attorney.

THE NORRIS PETERS CO., PHOTO-LITHO., WASHINGTON, D. C.

(No Model.) 23 Sheets—Sheet 11.

J. BENNOR.

CIRCULAR KNITTING MACHINE.

No. 456,372. Patented July 21, 1891.

Fig. 3.

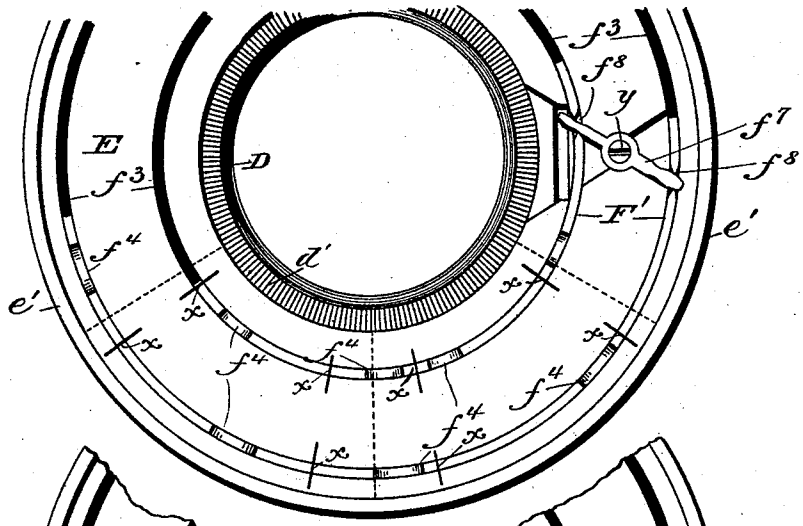

Fig. 3a.

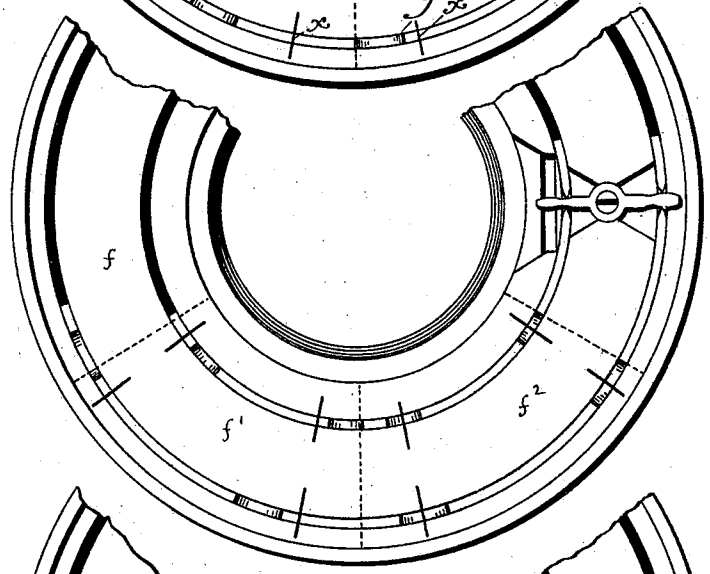

Fig. 3b.

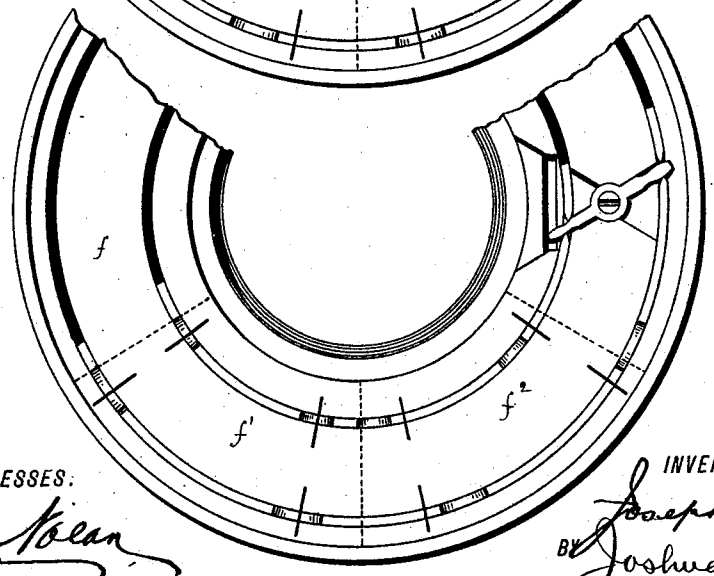

WITNESSES:

John Nolan

Mark Wilks Collet

INVENTOR

Joseph Bennor,

BY Joshua Pusey

ATTORNEY

THE NORRIS PETERS CO., PHOTO-LITHO., WASHINGTON, D. C.

(No Model.) 23 Sheets—Sheet 12.

J. BENNOR.

CIRCULAR KNITTING MACHINE.

No. 456,372. Patented July 21, 1891.

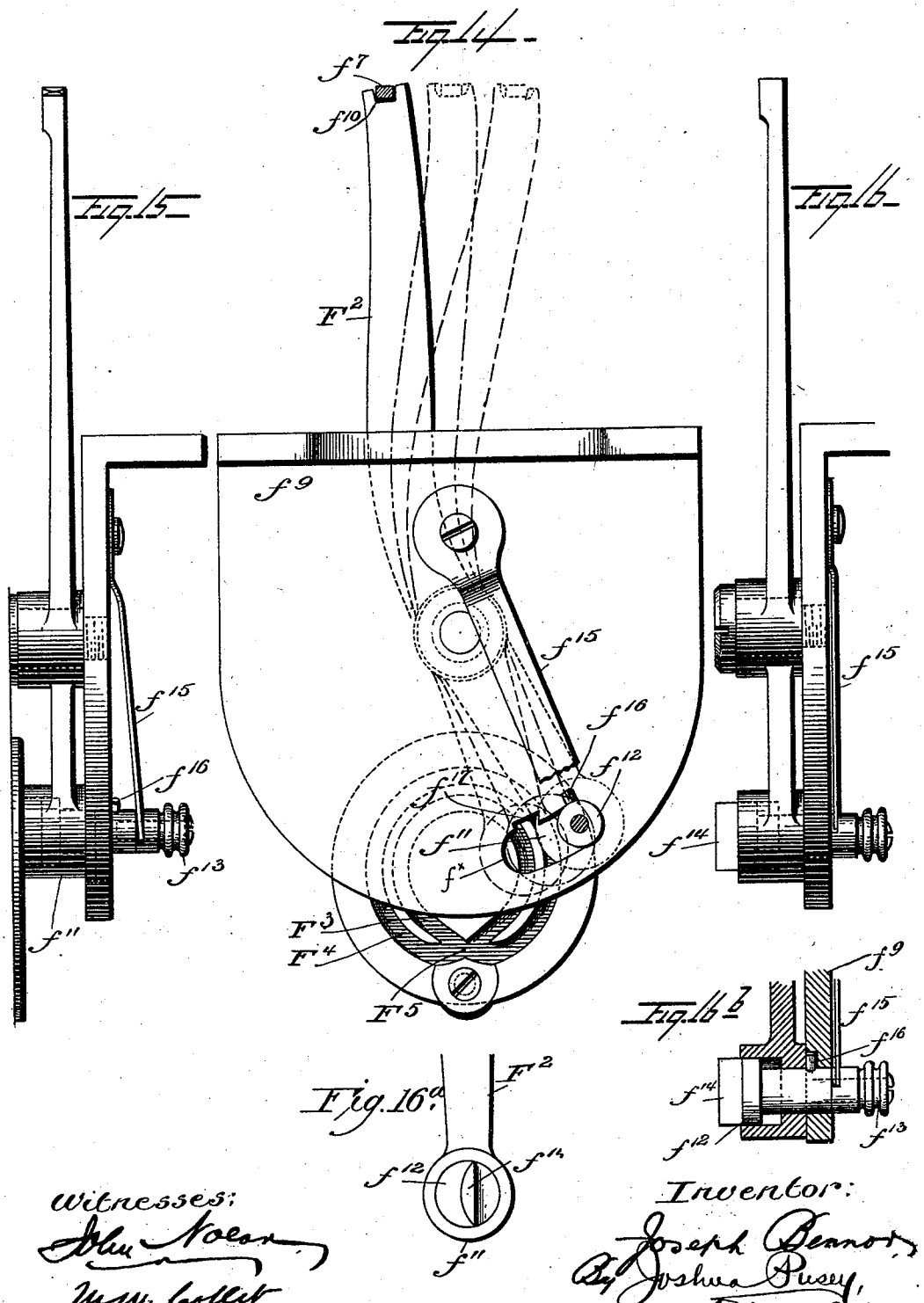

Witnesses:
John Nolan
Wm. Collier

Inventor:
Joseph Bennor,
By Joshua Pusey,
Attorney.

THE NORRIS PETERS CO., PHOTO-LITHO., WASHINGTON, D. C.

(No Model.) 23 Sheets—Sheet 13.

J. BENNOR.

CIRCULAR KNITTING MACHINE.

No. 456,372. Patented July 21, 1891.

Fig. 17

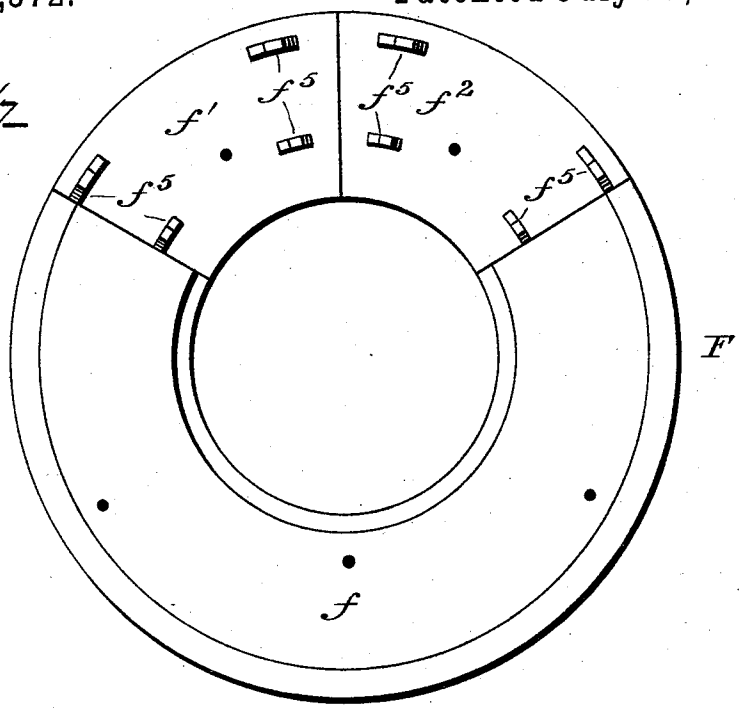

Fig. 18

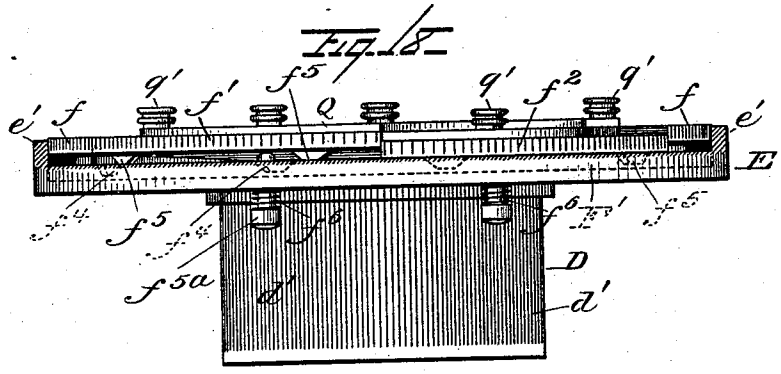

Fig. 19

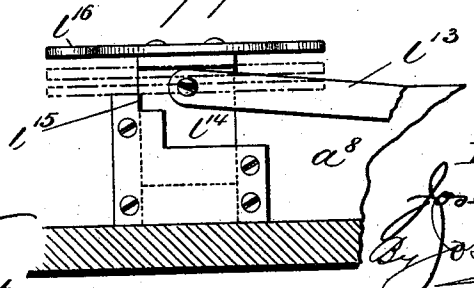

Witnesses.
Allen Nolan,
Mark Wilks Collet

Inventor:
Joseph Bennor,
By Joshua Pusey,
Attorney.

THE NORRIS PETERS CO., PHOTO-LITHO., WASHINGTON, D. C.

(No Model.) 23 Sheets—Sheet 14.

J. BENNOR.

CIRCULAR KNITTING MACHINE.

No. 456,372. Patented July 21, 1891.

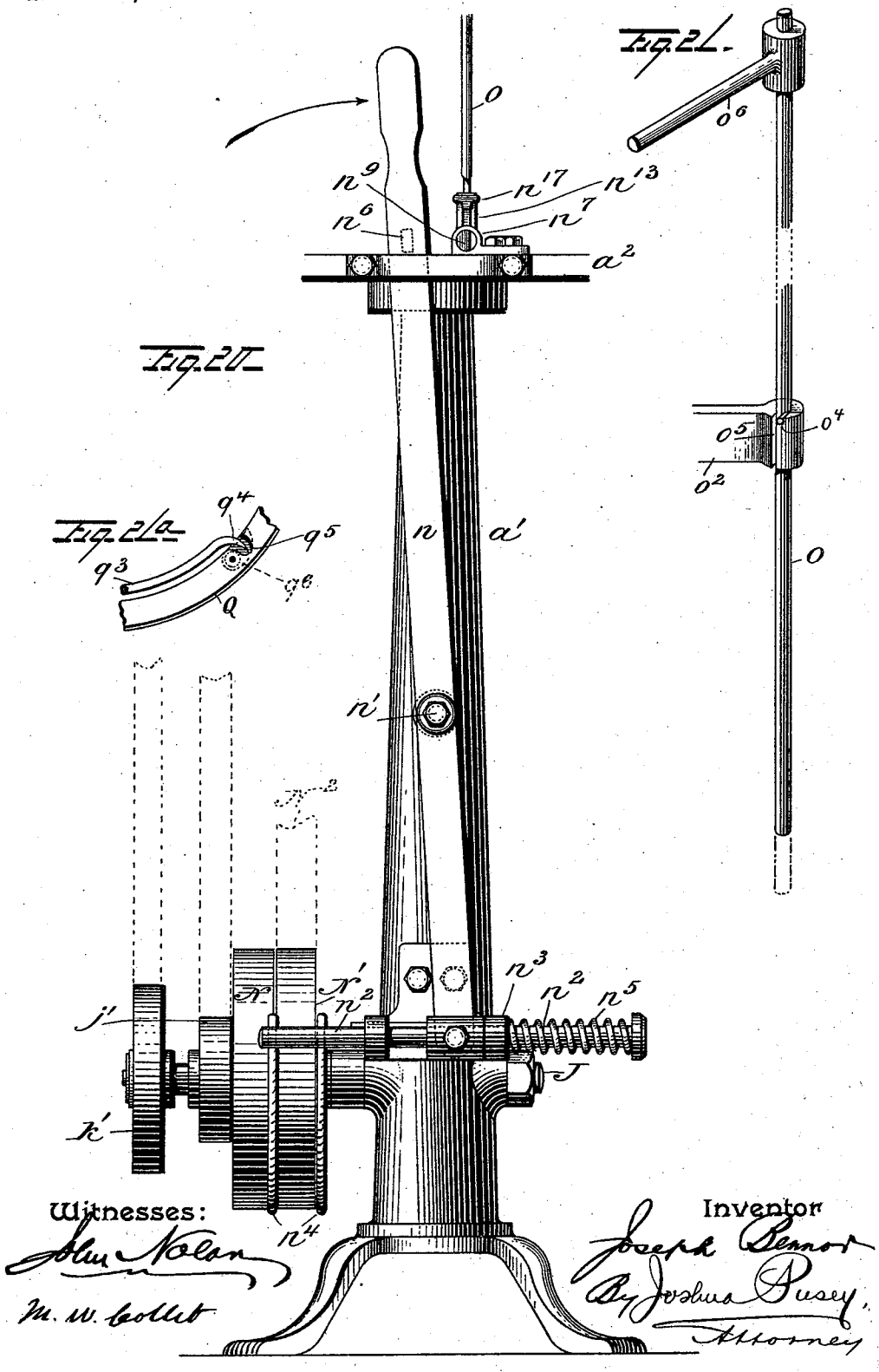

Witnesses:
John Nolan
M. W. Collet

Inventor
Joseph Bennor
By Joshua Pusey,
Attorney

THE NORRIS PETERS CO., PHOTO-LITHO., WASHINGTON, D. C.

(No Model.) 23 Sheets—Sheet 15.

J. BENNOR.

CIRCULAR KNITTING MACHINE.

No. 456,372. Patented July 21, 1891.

Fig. 22.

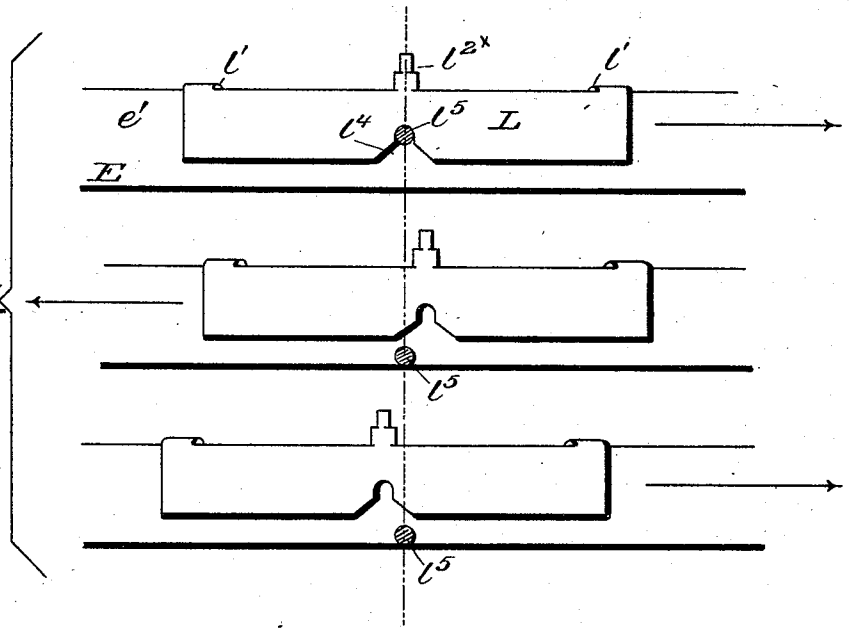

Fig. 23.

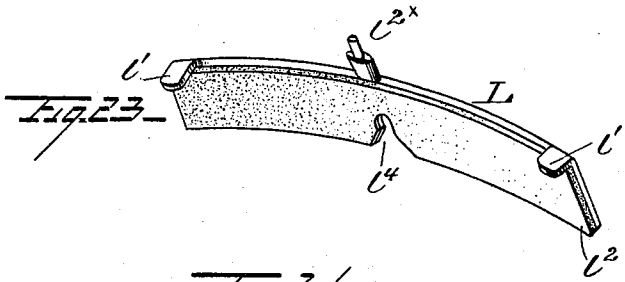

Fig. 24.

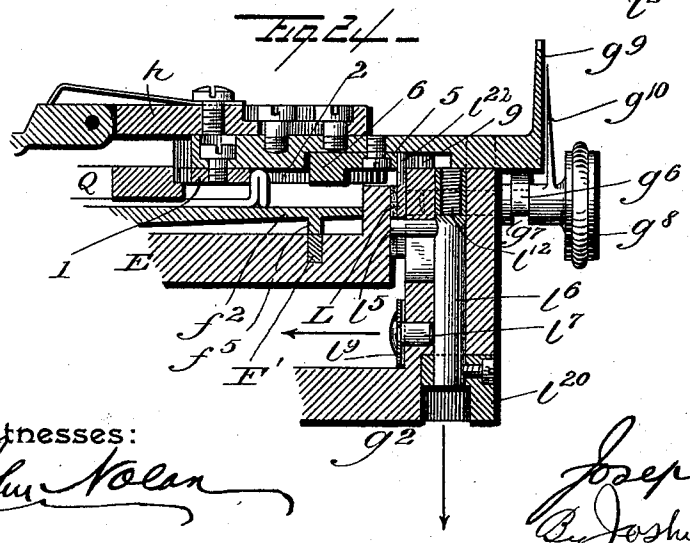

Witnesses:

Alan Nolan

M. W. Collett

Inventor

Joseph Bennor,

By Joshua Pusey,

Attorney.

THE NORRIS PETERS CO., PHOTO-LITHO., WASHINGTON, D. C.

(No Model.) 23 Sheets—Sheet 16.

J. BENNOR.

CIRCULAR KNITTING MACHINE.

No. 456,372. Patented July 21, 1891.

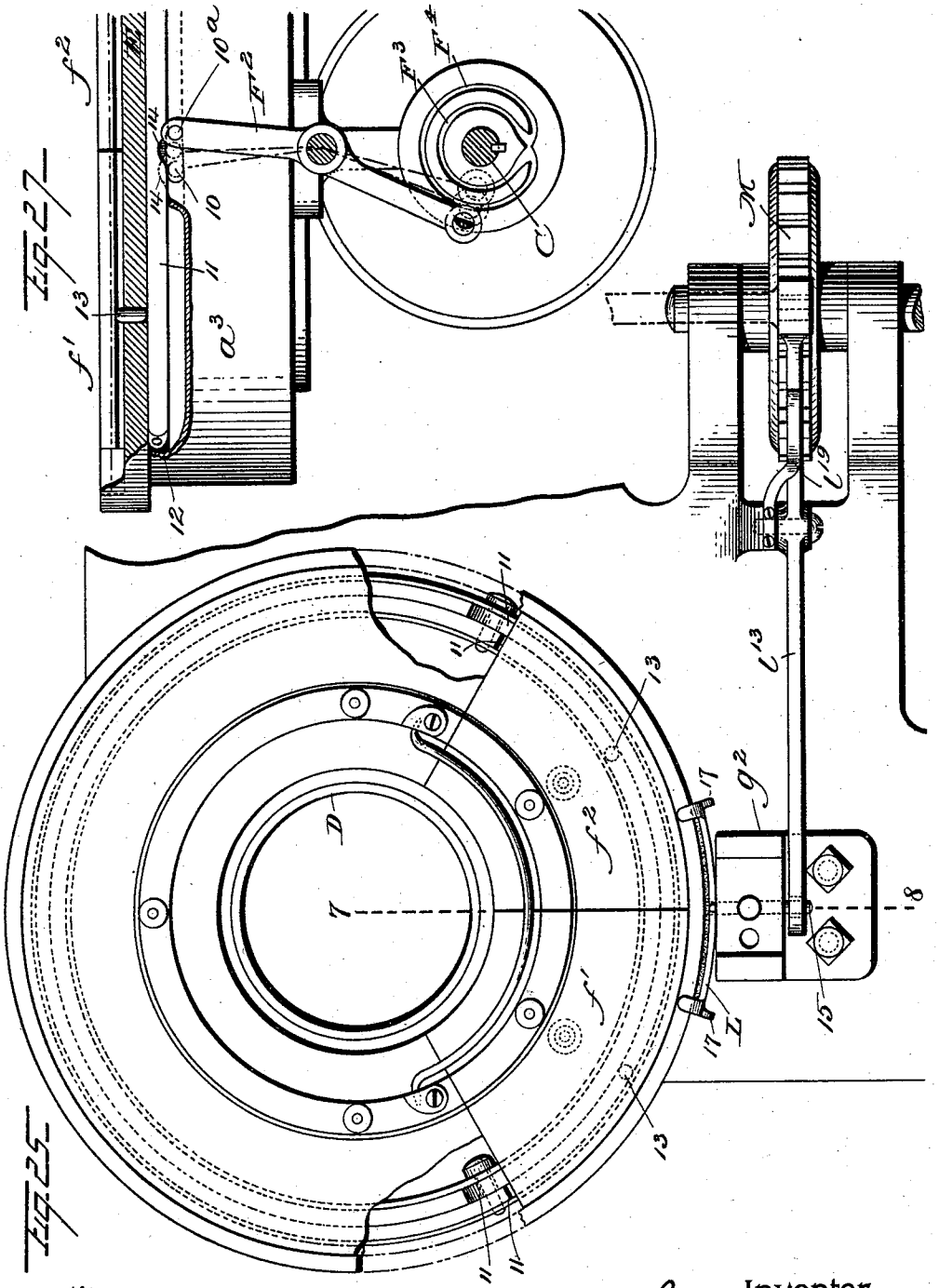

Witnesses:

John Nolan

M. W. Collet

Inventor

Joseph Bennor,

By Joshua Pusey,

Attorney.

THE NORRIS PETERS CO., PHOTO-LITHO., WASHINGTON, D. C.

(No Model.) 23 Sheets—Sheet 17.

J. BENNOR.

CIRCULAR KNITTING MACHINE.

No. 456,372. Patented July 21, 1891.

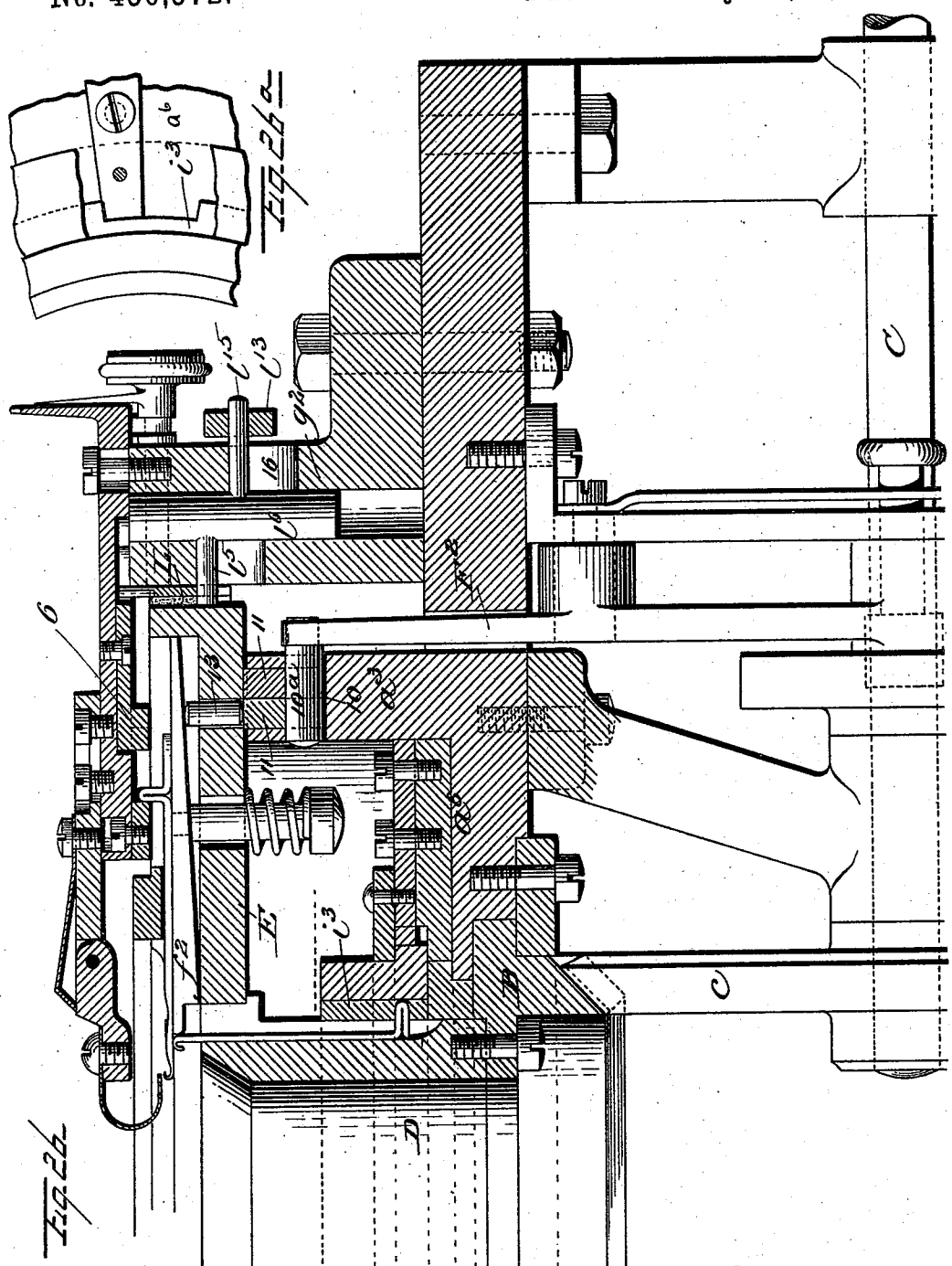

Witnesses:

John Nolan

M. W. Coolidge

Inventor

Joseph Bennor

By Joshua Pusey

Attorney

THE NORRIS PETERS CO., PHOTO-LITHO., WASHINGTON, D. C.

(No Model.) 23 Sheets—Sheet 18.

J. BENNOR.

CIRCULAR KNITTING MACHINE.

No. 456,372. Patented July 21, 1891.

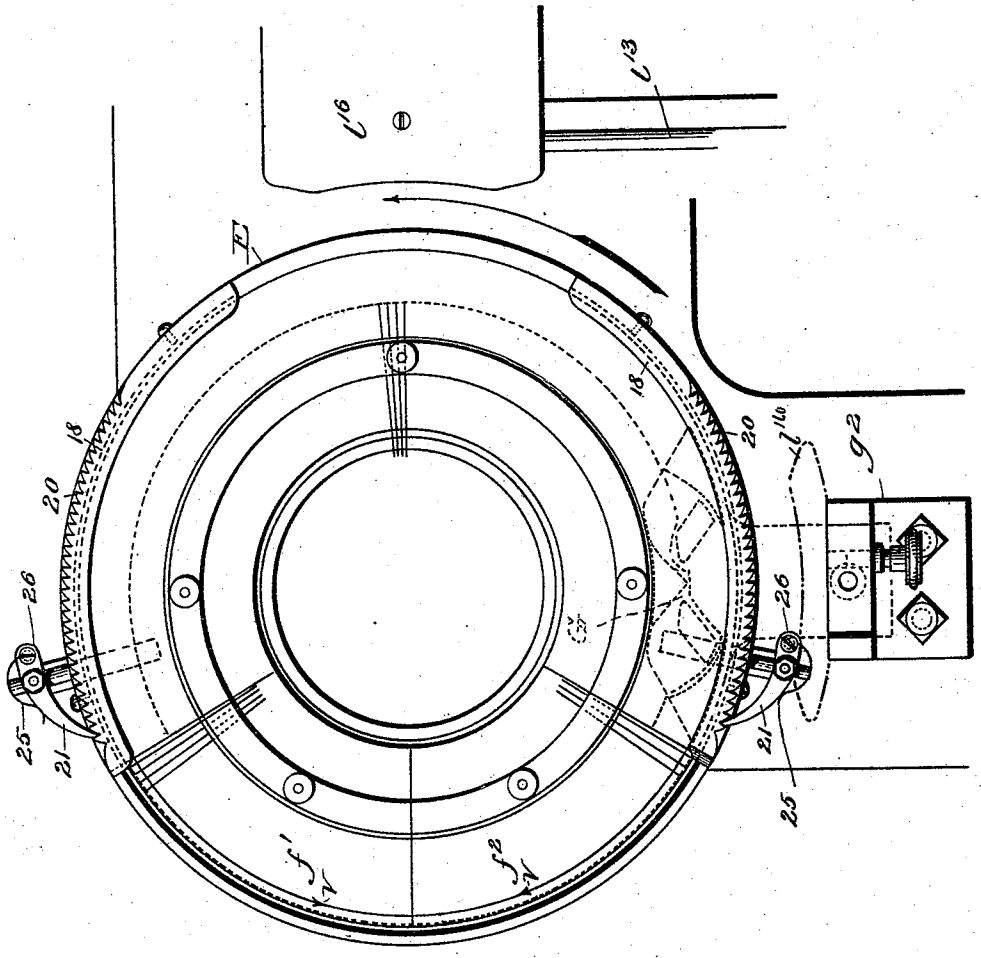

Fig 27.

Witnesses:

John Nolan

M. M. Collier

Inventor

Joseph Bennor

By Joshua Pusey.

Attorney.

THE NORRIS PETERS CO., PHOTO-LITHO., WASHINGTON, D. C.

(No Model.) 23 Sheets—Sheet 19.

J. BENNOR.

CIRCULAR KNITTING MACHINE.

No. 456,372. Patented July 21, 1891.

Fig. 29.

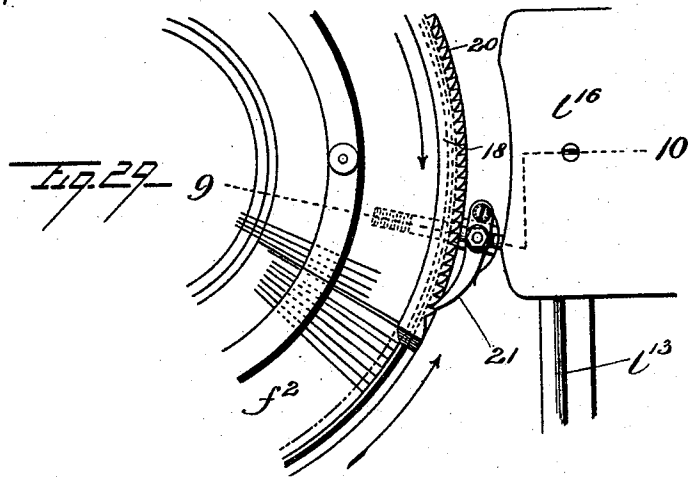

Fig. 30.

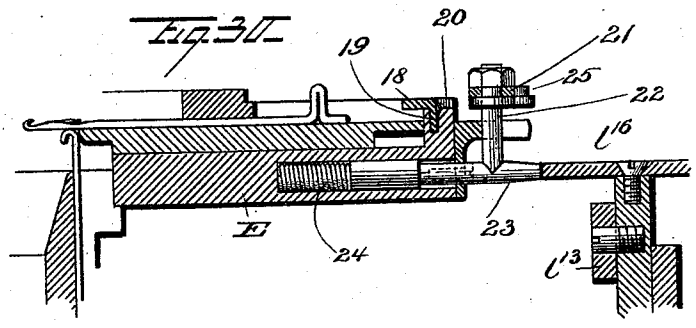

Fig. 31.

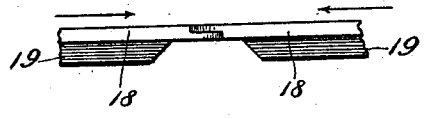

Witnesses:
Allen Nolan
M. M. Collet

Inventor
Joseph Bennor,
By Joshua Pusey,
Attorney.

THE NORRIS PETERS CO., PHOTO-LITHO., WASHINGTON, D. C.

(No Model.) 23 Sheets—Sheet 20.

J. BENNOR.

CIRCULAR KNITTING MACHINE.

No. 456,372. Patented July 21, 1891.

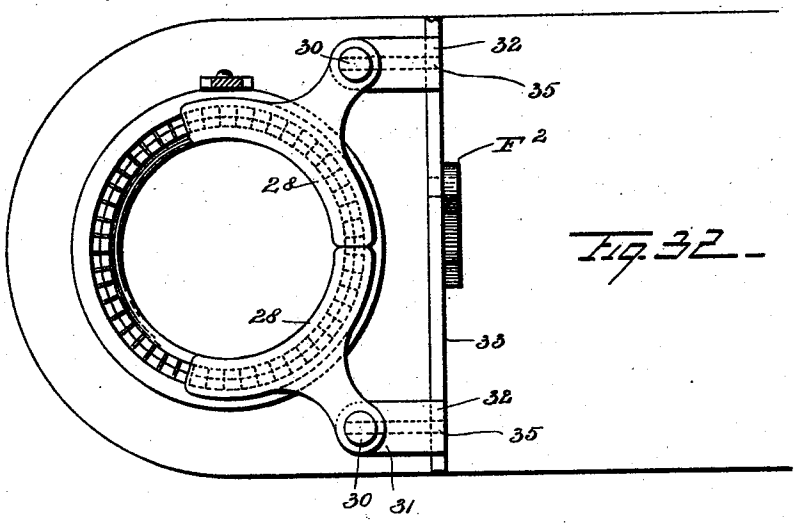

Fig. 32.

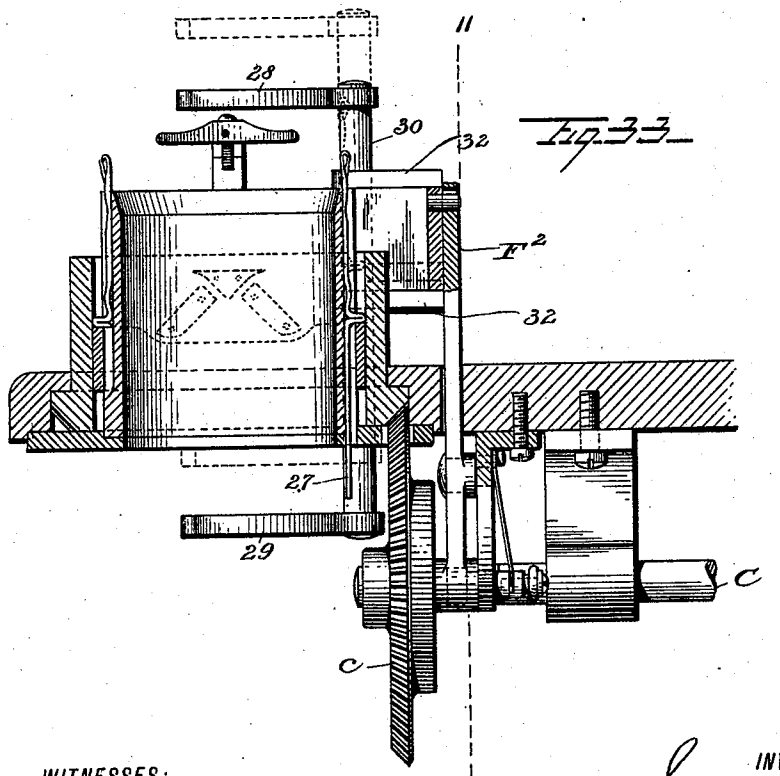

Fig. 33.

WITNESSES:

INVENTOR

Joseph Bennor

BY Joshua Busey,

ATTORNEY.

THE NORRIS PETERS CO., PHOTO-LITHO., WASHINGTON, D. C.

(No Model.) 23 Sheets—Sheet 21.

J. BENNOR.

CIRCULAR KNITTING MACHINE.

No. 456,372. Patented July 21, 1891.

Fig. 34.

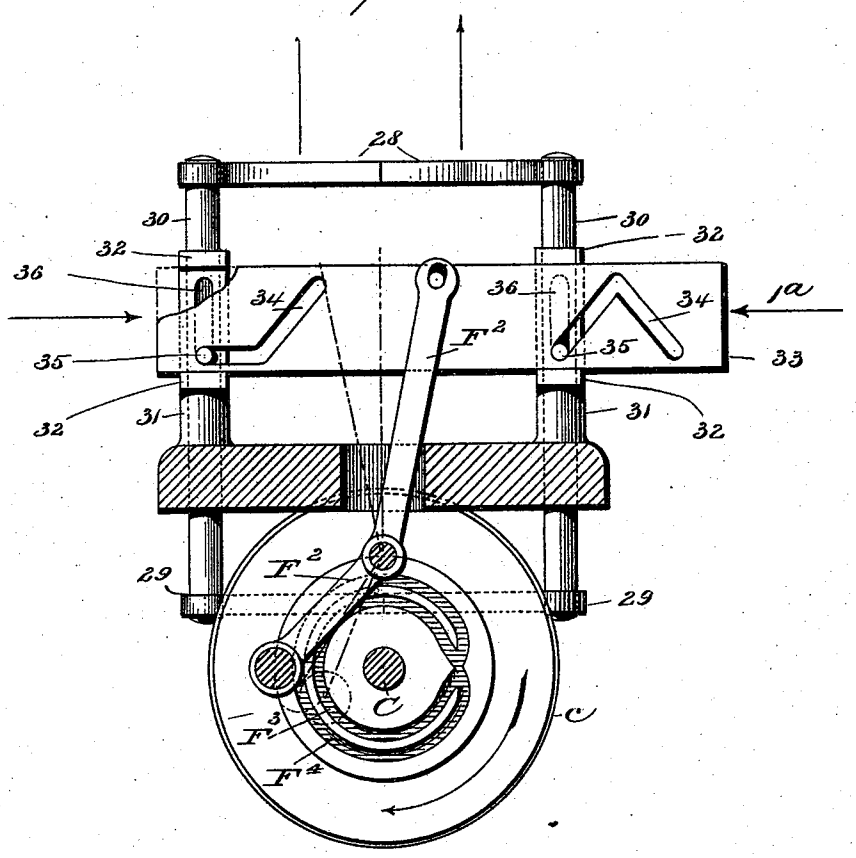

WITNESSES:

John Nolan

Wm. Collett

INVENTOR

Joseph Bennor,

BY Joshua Pusey,

ATTORNEY.

THE NORRIS PETERS CO., PHOTO-LITHO., WASHINGTON, D. C.

(No Model.) 23 Sheets—Sheet 22.

J. BENNOR.

CIRCULAR KNITTING MACHINE.

No. 456,372. Patented July 21, 1891.

Fig. 35.

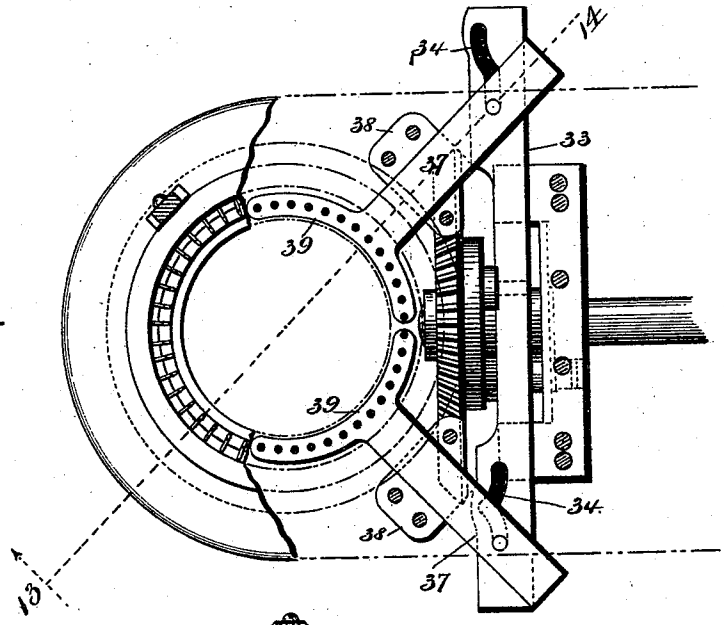

Fig. 36.

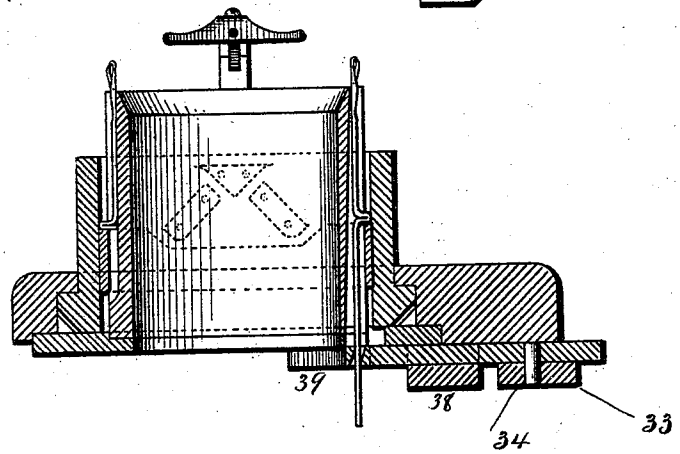

Fig. 37.

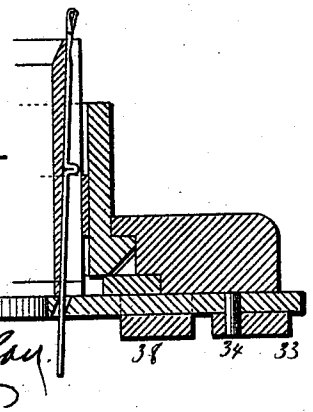

Fig. 38.

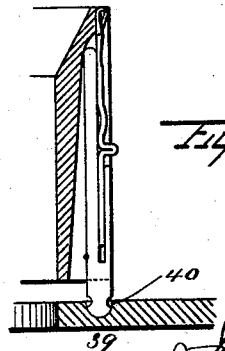

WITNESSES:

John Nolan.

Marcus. Collet

INVENTOR

Joseph Bennor

BY Joshua Pusey,

ATTORNEY.

THE NORRIS PETERS CO., PHOTO-LITHO., WASHINGTON, D. C.

(No Model.) 23 Sheets—Sheet 23.

J. BENNOR.

CIRCULAR KNITTING MACHINE.

No. 456,372. Patented July 21, 1891.

Fig. 39.

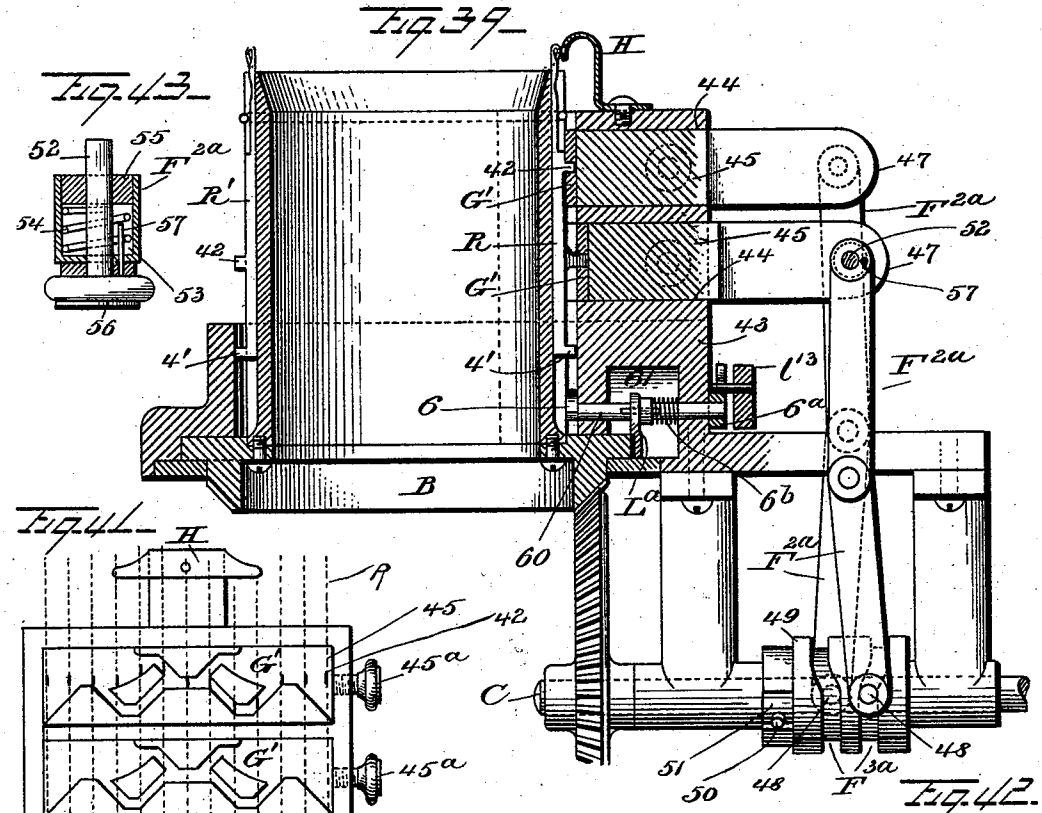

Fig. 43.

Fig. 44.

Fig. 42.

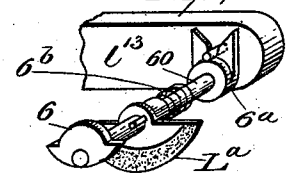

Fig. 40.

Witnesses:

John Nolan,

Mark W. Mitchell

Inventor

Joseph Bennor

By Joshua Pusey,

Attorney.

THE NORRIS PETERS CO., PHOTO-LITHO., WASHINGTON, D. C.

UNITED STATES PATENT OFFICE.

JOSEPH BENNOR, OF PHILADELPHIA, PENNSYLVANIA.

CIRCULAR-KNITTING MACHINE.

SPECIFICATION forming part of Letters Patent No. 456,372, dated July 21, 1891.

Application filed February 8, 1890. Serial No. 339,633. (No model.)

To all whom it may concern:

Be it known that I, JOSEPH BENNOR, a citizen of the United States, residing at the city and county of Philadelphia, and State of Pennsylvania, have invented certain new and useful Improvements in Circular-Knitting Machines, of which the following is a full, clear, and exact description, reference being had to the accompanying drawings, of which—

Figure 1, Sheet 1, is a general perspective view of a knitting-machine embodying my invention, the pattern-chain being partially represented by dotted lines. Fig. 2, Sheet 2, is a sectional plan of the main parts of the machine, the needle-grooves in the dial shown in dotted and the needles in full lines. Fig. 3, Sheet 3, is a near side elevation of the upper portion of the machine, the take-up lever and adjuncts not shown, and the face-plate of the sprocket-wheel partly broken away for clearer illustration. Fig. 4, Sheet 4, is a transverse vertical section as on the line 1 2, Fig. 3. Fig. 5, Sheet 5, is a partial longitudinal vertical section as on the line 3 4, Fig. 2, there being shown exterior parts not appearing in Fig. 2 and the pattern-chain being omitted. Fig. 6, Sheet 6, is a similar section as on the line 5 6, Fig. 2. Fig. 7, Sheet 7, is a sectional plan of the forward end of the machine, the needle-operating cams, the dial-plate, and its supporting parts being omitted in order to expose parts otherwise concealed. Fig. 8, Sheet 8, is a partial plan of the dial and adjuncts, showing their relative positions during the knitting of a flat-fashioned selvaged web, the reciprocating cam-carriage having completed its first stroke and about to be reversed or moved in the direction of the adjacent arrow. This carriage during its first stroke is represented by the dotted lines. Fig. 9 is a partial front end elevation of the machine, the needle supporting and actuating parts being shown in the relative positions illustrated in Fig. 8. Figs. 10, 10^a, and 10^b, Sheet 9, are views of the needle-operating cams, showing the switch-cam in the respective positions which it is caused to assume at certain stages of the knitting operation, as hereinafter explained. Fig. 11, Sheet 10, is a transverse vertical section through the middle of the depressed dial section, the sinker-actuating mechanism, and adjoining parts, an outpressed needle being represented in said dial-section. Figs. 12 and 12^a are like views taken through the dial-section and its flanged bearing-plate on a line extending through the supporting feet or studs, said section being shown in the raised and depressed positions, respectively. Figs. 13, 13^a, and 13^b, Sheet 11, are partial plans of the flanged dial-bearing plate, showing the movable supporting-segments and the horizontal lever for moving the same in the respective positions which they are periodically caused to assume, as hereinafter specified. The radial dotted lines represent the movable dial-sections, and the points where the black lines intersect the segments indicate the positions occupied by the respective supporting-feet of said sections. Fig. 14, Sheet 12, is a separate view of the rocking lever and its supporting and operating parts, the full lines showing the position of the lever when the stud on the end thereof is retracted and disengaged from the cam-grooves, and the dotted lines showing the positions which the lever is caused to successively assume when the stud is projected and engaged with said grooves. Fig. 15 is an end view of the same. Fig. 16 is a similar view, the stud on the end of the rocking lever being projected. Figs. 16^a and 16^b are details of the lower end of the rocking lever. Fig. 17, Sheet 13, is a reverse plan of the dial-plate detached, clearly showing the supporting-feet of the movable sections. Fig. 18 is a front side elevation of the sinker-cylinder, the dial, its supporting-plate, and adjuncts, the flange of said plate being partly broken away in order to expose the movable dial-sections, one of which is shown depressed. Fig. 19 is a detail of the vertically-movable cam-plate and immediate connections for controlling the switch-cam mechanism. Fig. 20, Sheet 14, is an elevation of the belt-shifting mechanism. Fig. 21 shows the studded drop-rod and its slotted bracket-head. Fig. 21^a is a detail of the latch-guard. Fig. 22, Sheet 15, illustrates the switch-cam-controlling shoe in the several positions which it is caused to assume. Fig. 23 is a separate view of said shoe. Fig. 24 is a transverse vertical section through the cam-carriage and adjuncts, the switch-cam being locked in its normal or cen-

tral position. Fig. 25, Sheet 16, is a broken plan of a modification of the invention, parts unnecessary to the understanding thereof being omitted. Fig. 26, Sheet 17, is a transverse vertical section as on the line 7 8, Fig. 25, the central retracting spring-actuated pin and the supporting-pin of the movable dial-section for the sake of clearer illustration being brought forward or in the line through which the section is taken. Fig. 26ª is a detail of the device for controlling the position of the sinker cam-ring. Fig. 27, Sheet 16, is a broken elevation of a part of the movable dial-section supporting and operating parts, showing the rocking lever and the cams for actuating the same. Fig. 28, Sheet 18, is an outline plan of alternative mechanism for successively moving the outpressed needles into the path of the knitting-cams, which cams are shown in dotted lines. Fig. 29, Sheet 19, is a detail of said mechanism, illustrating its action upon the needles. Fig. 30 is an enlarged section as on the line 9 10, Fig. 29. Fig. 31 is a detail hereinafter referred to. Fig. 32, Sheet 20, is a plan of an ordinary circular knitter embodying a modified form of the invention. Fig. 33 is a longitudinal vertical section through the same, parts being shown in elevation. Fig. 34, Sheet 21, is a transverse vertical section as on the line 11 12, Fig. 33, the needle and cam cylinders not shown. Fig. 35, Sheet 22, is a broken plan of another modification used in connection with an ordinary circular knitter. Fig. 36 is a full vertical section as on the line 13 14, Fig. 35. Fig. 37 is a partial section showing the position of the parts when a series of needles is thrown out of action with the cams. Fig. 38 shows a slight change in the mode of connecting the needles with the reciprocating segment. Fig. 39, Sheet 23, is a vertical section of a modification in which two sets of knitting-cams and two sets of needles are employed. Fig. 40 is a plan of the same. Fig. 41 is a face view of the knitting-cams and their supporting-bracket, the dotted lines representing needles in engagement with the upper set of cams. Fig. 42 is a detail of the switch-cam and its connections used in this duplex cam and needle machine. Fig. 43 is a sectional detail of a spring-controlled coupling-pin hereinafter described.

This invention relates to that general class of knitting-machines in which a circular row or series of needles is actuated by suitable cam mechanism.

The main, though not the exclusive, purpose of the invention is to adapt machines of this class to the knitting of a web having one part thereof tubular or seamless and the other part flat, fashioned, and selvaged, said web being more especially designed for use as a stocking-leg blank, as will duly appear.

The nature, construction, and operation of the invention will be hereinafter fully described, and the matter considered new will be pointed out in the claims.

Referring to the annexed drawings, particularly to Figs. 1 to 24, both inclusive, A represents the supporting-frame comprising a standard a', a top plate a^2, and a forward internally-flanged ring a^3, the whole being firmly bolted together.

B is an annulus, which is rotatably supported upon shoulders within the ring a^3. This annulus is bevel-toothed on its under edge and gears with a lower bevel-wheel c, which is keyed on a horizontal shaft C, said shaft being mounted within hangers or brackets a^4 a^5, depending from the ring a^3, to which they are securely bolted.

D is a hollow cylinder, which is mounted centrally within the ring a^3, being firmly screwed or otherwise secured to the flange a^6. (See Fig. 5.) Upon the top of this cylinder is fixed an external ring or plate E, which is provided with a surrounding vertical flange e', and sustained upon this flanged plate is a dial-plate F, which is provided on its upper surface with equidistant radial guideways f^a, within which the needles are mounted. The needle-heels project above these ways. Resting upon the dial-plate, so as to engage the projecting needle-heels, are the needle-operating cams G, which are of peculiar construction, as hereinafter explained. They are arranged upon the under side of a plate g, which is adjustably supported upon the vertical limb g' of a bracket g^2, that is firmly bolted to and rotatable with the toothed annulus B. This bracket and plate constitute the cam-carriage and will be hereinafter collectively referred to as such. Extending radially inward from the cam-bearing plate g is an arm h, upon whose inner or free end an ordinary yarn guide or conductor H is supported with proper reference to the plane of the needle-hooks.

From the foregoing it will be seen that when the shaft C is properly turned the bevel-wheel thereon will rotate the toothed annulus, and therewith the cam-carriage, whereupon the knitting-cams during their traverse will act upon the projecting needle-heels in their path and radially reciprocate the same. The yarn-guide will conduct the yarn to the needles, and upon each revolution of the cams a circular course of stitches will be knit.

In the periphery of the cylinder D is a series of equidistant vertical grooves or ways d', which are equal in number to and alternate with those in the dial-plate. Within these grooves or ways d' are contained vertically-movable sinkers I, whose heels i' enter a groove or channel i^2, formed in and around the inner side of a ring i^3, which loosely surrounds the cylinder and is supported by and upon a ring i^4, interposed between the cylinder and the annulus. This interposed ring rests upon set-screws i^5, which work in and through the flange of the exterior ring a^3. The sinker-ring i^3 is connected with and rotated by the toothed annulus, as will be presently described. By properly manipulating the screws i^5 the rings i^4 i^3, and therewith the sink-

ers, may be nicely adjusted vertically. Vertical displacement of the sinker-ring is prevented by a ring i^6, which rests thereupon and is held in place by means of screw-posts i^8, depending from the plate E into perforations i^7 in said ring i^6. (See Figs. 9 and 11.) Before the set-screws i^5 are manipulated, as just described, the screws i^8 are correspondingly adjusted.

The groove or channel i^2 in the cam-ring is interrupted by a U-shaped offset i^9, Fig. 5, at or about the point where the needles are retracted by the knitting-cams while completing the stitches, whereby at this point the sinker-hooks will be moved upward, so as to free the yarn and permit the needles to act thereupon, after which said hooks will be depressed in order to sink and hold down the stitches thus formed. The sinker-cam and the knitting-cams are so timed relatively that this action of the sinkers will be repeated durng the formation of each stitch in every successive course of the web. This web will of course be tubular; but in order to adapt the machine to the knitting of a flat selvaged web I in some instances make the dial-plate F in three radial sections—a large or main section f and two smaller sections f' f^2. The dimensions of each of the latter are such that the projecting heels of the needles contained therein will occupy a line or space equal to or greater than the actual width of the knitting-cams. These sections f' f^2 are vertically movable, as hereinafter described, so that either may be depressed in order to throw the heels of the needles therein below the path or horizontal plane of the said cams, whereby if the latter be brought over one of the sections thus depressed the direction of movement of the cams may thereupon be reversed. As a means by which these sections may be alternately raised and lowered automatically during the reciprocation of the cams, so that said cams during each stroke thereof shall make a traverse sufficient to take in and operate all the needles in the dial-plate, I have devised mechanism of the following-described construction, reference being had more particularly to the figures on Sheets 10, 11, and 13 of the drawings.

F′ F′ are two segmental bars, which are confined and movable within concentric grooves or guideways f^3, formed in the upper side of the ring or plate E. The tops of these bars are flush with the upper surface of the latter and are provided at suitable points with depressions or cavities f^4. The under sides of the sections f' f^2 are inclined upward from their inner ends and are provided at proper points with small feet or studs f^5, which rest upon the bars F′, respectively. The relation of these feet to the cavities in said bars is such that when the latter are properly moved the feet of one section will enter the adjacent cavities and said section be thereupon lowered, while the feet of the other section will remain supported upon the tops of the bars; and, again, when the movement of the bars is continued the feet of the depressed section will be raised upon the bars, while those of the other section will register with the cavities and said last-mentioned section be thereupon lowered. If the bars be returned to their first or normal condition, both sections will be supported in the raised position.

In order that the feet of the movable sections shall positively enter the cavities f^4 when in line vertically therewith, I provide each of said sections with a headed pin or screw f^{5a}, which extends down through an aperture f^{6b}, Fig. 11, in the plate E, and I interpose a strong compression-spring f^6 between the pin-head and the bottom of said plate. On the upper surface of the latter, near the adjacent ends of the bars F′ and intersecting the guide-grooves f^3, is a recess, within which is pivoted, at a point y midway between said bars, a small horizontal lever f^7, whose arms engage with notches f^8 in the tops of the bars. On the side of a vertical plate or bracket f^9, which depends from the under side of the ring a^3, just in front of the bevel-wheel c, is pivoted a vertical lever F^2, whose upper arm projects through a slot in the plate E and is provided with a vertical notch or recess f^{10}, into which extends the inner end of the lever f^7. Thus, obviously, the act of rocking the lever F^2 will oscillate the horizontal lever f^7, and the latter in turn will reciprocate the bars upon which the feet of the movable dial-sections are supported.

The lower arm of lever F^2 has on its end a boss or head f^{11}, through which extends a pin f^{12}. One end of this pin projects through a slot $f^\times$ in the plate f^9 and is provided with a knob or handle f^{13}, and its other end is provided with a stud f^{14}, which is normally projected beyond the head by means a flat spring f^{15}, one of whose ends is screwed or otherwise secured to the plate f^9, while its other end is bifurcated and engages a notch in the knob f^{13}. The pin f^{12} is also provided with a stud f^{16}, and the slot in the bracket has an offset f^{17} at or near one end thereof, whereby when the stud is brought opposite the offset the pin may be retracted against the action of the spring, so as to draw the stud f^{14} wholly into the head and the stud f^{16} into and through the offset f^{17}, whereupon if the lever F^2 be moved laterally sufficiently to throw the stud beyond said offset the parts will be held thus retracted. Centrally on the inner side of the bevel-gear c is cast or secured a boss, which is provided with two concentric grooves F^3 F^4 therein, the continuity of each of which is broken at a point F^5, where they cross each other and intercommunicate, as clearly pictured in Figs. 5 and 14. When the stud f^{14} is retracted within the boss or head f^{11} and the latter drawn outward or to the right to the end of the slot $f^\times$, the upper arm of lever F^2 will be thrown backward, and, acting upon the lever f^7, will move the bars F′ into the relative positions shown in Fig. 13—that is

to say, all the cavities therein will be out of engagement with the feet of the movable sections, and both of the latter will thus be supported upon the tops of the bars in the raised position. The points x, where the black radial lines intersect said bars, are those at which the feet are disposed, as aforementioned. When, however, the head f^{11} is returned to the offset end of the slot $f^{\times}$, the stud will be free and the spring f^{15} will thereupon force the pin outward, and consequently project the stud, as hereinbefore described. Such movement of the head f^{11} will throw the upper end of the lever forward and, perforce, through the action of the lever f^{7}, will move the bars F′ into the position shown in Fig. 13^{b}—that is to say, the cavities toward one end of the bars will be brought in line radially with each other and below the feet of the adjacent section f', which latter will thereupon be depressed, as above explained. The feet of the other section f^{2} will remain supported upon the tops of the bars F′, in that during this movement the adjacent cavities will not have been brought below said feet, as shown in said Fig. 13^{b}. The disposition of the grooves F^{3} F^{4} is such that when the stud f^{14} is projected, as above explained, it will enter the inner groove F^{3}. When the section f' is depressed, as just explained, the bevel-wheel c is rotated either manually by means of a crank-handle C′, Fig. 1, on the end of its shaft or automatically by mechanism which will be duly described. The grooves F^{3} F^{4} are so timed that during the revolution of the wheel c the intersecting or cam portion F^{5} will impinge against the stud f^{14} and deflect the latter into the outer groove F^{4}, thereupon throwing the vertical lever into the intermediate position. This lever, through the action of the lever f^{7}, will move the bars F′ into the positions shown in Fig. 13^{a}—that is to say, the cavities will be removed from the feet of the section f', while the opposite cavities will be moved below the feet of the other section f^{2}, thus effecting the depression of the latter section and the elevation of the section f'. The cams are turned upon the dial-plate till they arrive above the depressed section, whereupon the direction of movement of the wheel c, as also, consequently, that of the cams, is reversed. During the reverse stroke of the cams the intersecting portion of the grooves will again impinge against the stud f^{14} and direct the latter into the inner groove F^{3}, thus reversing the positions of the sections, as before described—that is to say, the section f^{2} will be raised, while the section f' will be depressed. Likewise both sections will be raised and lowered alternately in succession during the reciprocation of the knitting-cams.

By the above-described construction it will be apparent that during each stroke of the cams all the needles in the dial-plate will be actuated thereby, and the result of the continued operation will be a flat selvaged knitted web, possessing in each course as many stitches as there are needles in said plate.

In order that the sinker-cam i^{9} shall be thrown into proper relative time with the knitting-cams upon each stroke of the latter during their reciprocation, I cut in the periphery of the ring i^{3} at suitable intervals grooves or recesses i^{10}, into each of which extends a bar or bolt i^{11}, which is mounted upon and carried by the toothed annulus. The width of each groove is so much greater than that of the engaging bar or bolt that when the movement of the annulus is reversed there will occur, before the bar impinges against the opposite edge of said groove, an interval or lost motion sufficient to time the respective cams.

It will be observed that if the bars or bolts i^{11} were rigidly fixed upon the annulus their path would be obstructed by the upper arm of the vertical lever F^{2}. In order, therefore, that the bars or bolts during their rotation will successively recede and clear this lever-arm at the proper time or times, I mount the former loosely within guide-brackets i^{12}, fixed on the top of the annulus, and I provide the under side of each of the bars with a small friction-roller i^{13}, Fig. 11, which extends into and rides within an eccentric groove i^{14}, formed in the upper surface of the ring i^{4}. The eccentricity of this groove is such that the bars i^{11} as they successively approach the arm of the lever F^{2} will be retracted sufficiently to clear the latter, whereupon as the annulus revolves the said bars will be moved back into engagement with the notches in the sinker cam-ring, as clearly illustrated in Fig. 7.

In order that the cams may be automatically reciprocated, as above described, I provide mechanism of the following construction:

J, Figs. 1 and 20, is a shaft, which is mounted in bearings near the base of the standard a' and is driven from some suitable source of power. Keyed upon this shaft is a pulley j', which is connected with and communicates motion to an upper pulley j^{3} by means of a belt j^{4}, Fig. 1. The stud j^{5}, upon which this latter pulley is fixed, is journaled within a bracket j^{6}, rising from the top plate of the supporting-frame, and upon the inner end of said stud is borne a pinion j^{7}, which gears with a spur-wheel j^{8}, mounted on a lower stud j^{9}, which latter stud projects outward from a depending bracket or hanger j^{10}. Pivoted on the inner side of this spur-wheel is a block or crank-wrist j^{11}, which extends into and works within the vertical slot j^{12} of a "Cross" traversing frame J′, whereby the latter will be reciprocated when the spur-wheel is revolved. The rear member of this frame is supported and guided in its movement by means of a block j^{13}, which extends from the side of bracket j^{10} into a horizontal slot j^{14} within said frame. The forward member j^{15} of the frame is also slotted horizontally, and through the same freely passes the shaft C. Upon this forward member is formed or secured a toothed

rack j^{16}, whose teeth engage with those of a pinion j^{17}, loosely mounted on said shaft.

When the driving-shaft J is actuated, continuous circular motion will be communicated therefrom through the intermediate connections to the spur-wheel, which wheel, by the action of the pivoted block within the vertical slot j^{12} in the traversing frame, will in turn impart a reciprocating rectilinear motion to said frame, and the rack on the forward end of the latter will thereupon impart to the pinion j^{17} a reciprocating circular motion. Now it will be evident that if this pinion be held fast on the shaft C said shaft will be correspondingly reciprocated, and the gear on the end thereof will impart a similar motion to the annulus and perforce to the cam-carriage. As a means whereby this pinion may be locked upon its shaft C when desired, I mount upon the latter a longitudinally-movable sleeve j^{18}, which is guided in its longitudinal movement upon the shaft and is made to turn therewith by means of a spline or feather j^{19}, which projects from said shaft into a groove cut in the sleeve. Surrounding this sleeve is a circumferential groove j^{20}, into which extend pivoted studs or blocks j^{21}, borne on the arms of a yoke-piece j^{22}, that is pivoted on the bracket-arm j^{23} and provided with an operating-handle j^{24}. On the inner end of the sleeve is a tooth or projection j^{25}, and on the adjacent face of the pinion j^{17} is a socket j^{26}. Thus if the yoke-handle be drawn outward the depending arms will move the sleeve inward or toward the pinion, and the tooth on said sleeve thereupon registering with the socket in the face of the pinion will effectually lock the latter upon its shaft. On this shaft, near its outer end, is loosely mounted a pulley K, which is belted with a pulley k', fast on the driving-shaft J. The inner boss or hub of this pulley K is provided with a projecting tooth or teeth k^2, Figs. 4 and 7, and the opposite face of the longitudinally-movable sleeve is likewise provided with a tooth or teeth k^3, whereby when said sleeve is thrown out of engagement with the pinion j^{17} its tooth or teeth may be brought into engagement with that or those of the pulley K, which latter will thereupon continuously rotate the shaft C, and, as before explained, operate the knitting mechanism to produce a tubular web. When the sleeve or clutch-sleeve is moved midway between the pulley K and the pinion j^{17}, as seen in Fig. 7, the shaft will be free and proper motion may be communicated thereto by the act of turning the crank-handle C', if desired

The needle-operating cams are of such construction that by the reciprocation thereof a flat-fashioned selvaged web may be knit, if necessary, either separately or in conjunction with the tubular web, which construction is as follows:

1 indicates the V-shaped depressing-cam, 2 the side or stitch cams, and 3 the return or elevating cams, the whole comprising the knitting-cams and being of usual form, relative arrangement, and operation. The outer edges of the cams 3 are inclined or rounded, as seen, and lying adjacent to the forward or inner point of each of the same is a cam 4, which is likewise mounted upon the plate *g*. The inner ends of the cams 4 are oppositely inclined, and at a point 5^a midway between the same is pivoted an arm 5, which carries on its inner end a "switch-cam" 6, so called. The body of this switch-cam is semicircular, or nearly so, and is provided with a narrow rounded head or projection 7, thus forming the lateral shoulders or corners 8. This cam 6 is so disposed that when the arm 5 is in its normal or central position the shoulders 8 will lie at points within the adjacent edges of the cams 4, and when the arm is rocked or oscillated said shoulders will be brought alternately in line with or below said adjacent edges, respectively. (See Figs. 10, 10^a, and 10^b.) The head 7 always extends inward slightly beyond the points of the cams 4. It will be seen that if before the reciprocation of the cam-carriage the needles or a portion thereof within the movable dial-sections be pushed outward—*i. e.*, toward the flange of plate E, as illustrated in Fig. 8—so that the needle-heels will be out of the path of the knitting-cams and beyond the line or path of the forward edge of the leading cam 3, the latter cam during its traverse on the first or raised dial-section will pass over and above the needle-heels, which heels will thereupon ride upon the upper edge of the adjacent cam 4 and be guided thereby toward the body of the switch-cam. Now if this switch-cam be in its normal position, as represented in Fig. 10, it will pass over these needle-heels, and the latter will escape through the groove or way between the following cams 3 4, and thus not be acted upon by the knitting-cams, while if the switch-cam as it advances upon the raised section be in the inclined position shown in Fig. 10^a the leading shoulder thereon will pass below the first opposed needle-heel, and the cam-head 7, abutting against the same, will by the resistance of the needle be thrust backward—that is, into the position shown in Fig. 10^b—thus leaving a gap or space through which the remaining outpressed needles within the dial-section will escape during the onward progress of the cams. This needle against which the cam-head abuts will be directed by the latter to and in line with the advancing inner edge of the rear cam 3, which edge, impinging against the needle-heel, will guide the same up into the path traversed by the knitting-cams. When the cams have cleared the needles within the raised dial-section and advanced above the depressed section, the stroke of the cams may be reversed, as above described. Upon the reverse stroke of the cams the needle just mentioned as having been thrown up into action will make its first stitch or begin to knit.

In order that the switch-cam at predeter-

mined intervals shall be caused to assume the proper positions during the reciprocation of the cam-carriage, I mount upon the periphery of the flange *e*, just below the needle-operating cams, a segmental friction-shoe L. This shoe is sustained upon and in close contact with the flange by means of lugs or teats *l'* and is faced with leather l^2 or like material, so as to "bite" the flange as much as possible. It is provided on its upper edge with a central stud $l^{2\times}$, which projects into a slot 9 in the outer end of the arm 5, and on its lower edge with a V-shaped notch or recess l^4, with which engages a pin or stud l^5, extending from a vertically-movable plunger l^6, confined within the bracket-arm *g'*. When the plunger is in its up position, the pin thereon will engage the apex or central point of the recess, and thus rigidly hold the shoe in place, which latter, through its connection with the arm 5, will maintain the switch-cam in the normal or intermediate position. When, however, the plunger is in the down position, the pin will be disengaged from the recess, and the shoe thereupon being free within certain limits will drag during the movement of the cam-carriage, and, according to the direction of such movement, will throw the switch-cam into either of the positions represented in Figs. 10^a or 10^b. The plunger is held in the up position by means of a stud l^7, which plays within a hole in the bracket-arm *g'*, and is normally pressed inward against said plunger, being borne on the free end of a flat spring l^9, which is secured to the inner face of arm *g'*. (See Figs. 6 and 7.) Extending through said arm in line with the spring is an aperture l^{10}, in which is contained a pin l^{11}, whose inner end bears against the face of the spring and whose outer end projects slightly beyond the outer side of the arm *g'*. Thus if this projected pin be pushed inward it will force outward the spring l^9, and consequently the stud l^7, thereby releasing the plunger l^6 and permitting it to drop. To aid the descent of the plunger, I sometimes interpose a small compression-spring l^{12} between the head of the former and the inner side of the cam-bearing plate *g*. To move this projecting pin automatically at the proper time or times during the movement of the cam-carriage, I pivot at a point Z on a transverse rib or bracket a^8, rising from the frame-plate a^2 just back of the annulus B, a lever l^{13}, whose inner end is pivotally connected with a vertically-movable plate l^{14}, which is guided is an offset or recess l^{15}, formed within said rib or bracket. On the top of this plate is borne a horizontal plate l^{16}, with projecting forward corners l^{17}, which intersect the path of the projecting pin-head l^{11} when the horizontal plate is moved into line horizontally with the latter, whereupon said head during its movement will impinge against the opposed corner and be pressed inward thereby with the effect mentioned.

On the outer end of the lever l^{13} is a head l^{18}, which rides upon the links of a pattern-chain M, being held thereupon by means of a flat spring l^{19}, which is so secured to the bracket-piece a^8 as to bear upon and depress the free arm of the lever. In this instance the pattern-chain comprises a series *m* of alternate medium and low links, which governs the formation of the flat-fashioned web, a series *m'* of low links, which determines the length of the tubular web, and at each end of the two series an intermediate high link m^2, whose office, through suitable stop mechanism, is to arrest the motion of the machine upon the completion of each of said webs, as will be hereinafter described. (See Fig. 3.) On the stud or shaft of the sprocket-wheel M', which carries this chain, is a ratchet-wheel m^3, with whose teeth engages a pawl m^4, which is pivoted on the end of a lever m^5. The fulcrum or pivot pin m^6 of this lever extends freely through the bracket a^4 and carries on its opposite end a depending arm m^7. The pawl is held normally in engagement with said ratchet-teeth by means of a retracting-spring m^8, which is secured to the pawl and to an arm or bracket m^9, depending from the supporting-frame. Upon the shaft C is mounted a cam m^{10}, which is adapted by the rotation of said shaft to bear against and expel the arm m^7, the lever m^5 and perforce the pawl thereupon being raised and the latter moving the ratchet-wheel and its shaft the distance of one tooth. A like movement will of course be imparted to the sprocket-wheel, which wheel in turn will move the pattern-chain a distance of half a link. (See Figs. 4, 5, and 6.)

As the pattern-chain should be moved an equal distance during each stroke of the reciprocating cam-carriage, and as more than a complete revolution of the shaft C is required to effect such stroke, owing to the additional onward movement of the cam-carriage after it has made a full traverse of the dial-plate, it is necessary, in order to compensate for the additional movement or fractional revolution of the shaft, that upon the reversal thereof the cam m^{10} shall not be immediately actuated. Hence I mount said cam loosely upon the shaft C and actuate it therefrom by means of a pin m^{11}, projecting from the shaft into and through a proportionate slot or slots m^{12} in said cam, as seen in Fig. 6. If this cam were positively fixed upon its shaft, the ratchet-and-pawl devices would be twice actuated during each stroke of the cam-carriage while reciprocating instead of once only, which double action would disconcert the pattern mechanism.

When the lever-head l^{18} rides upon the medium links of the pattern-chain, the plate l^{16} will be moved into the path of the projecting pin l^{11}, and, acting upon the same, will release the plunger. The latter will thereupon drop and unlock the shoe L, and as the cam-carriage revolves said shoe will drag, and thus forwardly cant or tip the switch-cam, as hereinbefore explained. This cam will be thrown

back by the first outpressed needle in the raised dial-section, and said needle will thereupon be thrown up into the path of the knitting-cams, the remaining outpressed needles within said section escaping through the gap formed by such back movement of the switch-cam, as previously described. Before the reversal of the stroke of the cam-carriage after it has cleared the needles within the raised dial-section it is necessary that the shoe be returned to and locked in its first or central position in order to throw the switch-cam into the fixed or inactive position, Fig. 10, so that the outpressed needles in the raised dial-section will not be acted upon thereby during the back-stroke of the cams. It will be obvious that if the shoe were not so returned and locked it would, upon the reversal of the carriage, move the switch-cam forward or into the position shown in Fig. 10^b, and said cam would thereupon act upon the first opposed needle-heel. As a means, therefore, to return and lock this shoe at the proper time, I provide the lower end of the plunger l^6 with a block or head l^{20}, and upon the forward end of the annulus a^3 I mount a segmental plate L′. This plate has cam-slots l^{21} therein, through which pass screws l^{22}, which project from the end of the annulus and maintain the plate in an inclined position—that is, with one of its ends projecting upward or above the top of the annulus and the other end downward or flush with the top of the annulus. The slots l^{21} are so shaped that upon pressure being applied to the raised end of the plate the latter will be moved into an oppositely-inclined position—that is to say, the raised end will be moved downward, while the low end will be moved upward. (See Fig. 9.) During the forward stroke of the cam-carriage, (dotted arrow, Fig. 8,) if the opposed end of the plate be elevated, as shown by the dotted lines in Fig. 9, the plunger-block l^{20} will impinge against the same and move it onward, and thus throw the plate into the oppositely-inclined position represented by the full lines in said figure, whereupon the plunger-block will ride upon the edge of said plate and be raised thereby, and the lateral plunger-pin l^5 in its upward movement will impinge against one side of the V-recess in the shoe and move the shoe into the central position. (See Fig. 22.) The spring-pressed pin l^7 will keep the plunger elevated, and the lateral pin l^5 will thus lock the shoe and perforce the switch-cam in the central or intermediate position. During the reverse stroke of the cam-carriage the outpressed needles within the raised dial-section will escape the action of the knitting-cams, as above explained; but the upthrown needle, as also all the needles within the fixed dial-section, will be engaged and operated by said cams. The plunger-releasing pin l^{11} will be inpressed by the projecting plate l^{16}, (see Fig. 2,) and, the plunger thereupon dropping, the shoe will be free. Said shoe will drag and throw the switch-cam into the position shown in Fig. 10^b—that is, with its leading shoulder at or below the edge of the adjacent cam 4. Before the stroke is completed the position of the movable sections will be changed, as before described, and as the cams ride upon the raised dial-section the needles will be actuated thereby in the same manner as were those in the other section during the forward stroke of the cams—that is to say, the first outpressed needle will be thrown up into the path of the knitting-cams, while the remaining needles will escape. The depressed plunger-head will strike against the opposed raised end of the plate and actuate and be actuated by the same in the same manner as during the preceding stroke. By this construction it will be seen that if the plate l^{16} be held in the path of the plunger-releasing pin and the reciprocation of the cam-carriage be continued the outpressed needles in the movable dial-sections will be regularly and singly thrown into action with the knitting-cams. Thus the courses of stitches knit by the machine will widen and produce a flat-fashioned selvaged web. In order, however, that the outpressed needles shall be actuated during alternate reciprocations (instead of successive strokes) of the cam-carriage, so as to widen two successive courses of stitches at opposite ends, and then to knit two courses without widening, and then to widen two courses, and so on, the alternate low links are provided in the pattern-chain. I here remark that by the term "reciprocation" herein is meant a group of two strokes of the cam-carriage. These links when brought below the lever-head l^{18} permit the latter to drop or to be depressed, thereby throwing the plate l^{16} up out of the path of the plunger-releasing pin, whereupon during the reciprocation of the cam-carriage the shoe and the switch-cam will remain locked in the intermediate position, and said cam will pass idly over the outpressed needles in the raised dial-section. During the next reciprocation of the cam-carriage a following medium link will be brought under the lever-head and the plate will be thrown again into the path traversed by the projecting plunger-pin with the effect before described, and so alternately a low and medium link will be brought under the lever-head until all the outpressed needles have been acted upon by the knitting-cams, whereupon the following high link will be brought under said head and the plate l^{16} be fully depressed. As above mentioned, the pattern-chain is moved a distance of half a link upon each stroke of the cam-carriage, or, in other words, a distance of a whole link upon each reciprocation of the carriage. Hence the needles toward the sides of the opposite sections $f f'$ are thrown into action during the alternate reciprocations of said carriage. The plate l^{16} is connected with a suitable stop mechanism of such construction that when the plate is thus depressed the stop mechanism will be actuated and thereby

arrest the motion of the machine. Said stop mechanism is of the following description:

N N′ represent the fast and loose pulleys, respectively, which are mounted upon the shaft J in the usual manner, and are adapted successively to receive a driving-belt N^2, Figs. 1 and 20, which is impelled from some suitable source of power.

n is a vertical shifting lever, which is fulcrumed at n' upon the standard a'. Its lower arm is pivotally connected with a sliding rod n^2, which is transversely mounted within bracket arms or lugs n^3, that are firmly secured to the standard. On one end of this rod is borne the shifting frame n^4, through which the driving-belt passes. The opposite end of this rod is headed, and interposed between the head and the adjacent bracket-lug is a spiral spring n^5, which acts to expel the rod, and thus move the shifting frame below the loose pulley N′. When, however, the upper arm of the lever is thrown in the direction of the adjacent arrow, Fig. 20, the rod n^2 will be moved inward or toward the pulleys against the stress of the spring, and the shifter-frame n^4 will thus be brought below the fast pulley, as seen in Fig. 2. In this way the driving-belt may be transferred from the fast to the loose pulley, and the converse.

In order to maintain the belt upon the fast pulley, I make in the inner side of the upper arm of lever n at a point just above the top of the plate a^2 a notch or recess n^6, and within a bracket n^7, firmly bolted upon said plate, I mount a stem n^8, whose outer end is formed with a bevel-face tooth n^9, which tooth is kept normally projected beyond the end of the bracket n^7 and in the path of the recessed arm by means of a confined spiral spring n^{10}, which bears against the inner end of the bracket and against an opposite shoulder upon the stem. (See Fig. 5.) When the lever is moved laterally, as described, its upper arm will abut against the opposed bevel-face of the tooth and thereupon force the latter inward against the action of the spring n^{10}; but the instant the recess is in line with the tooth the spring will project the tooth into said recess, and thereby lock the shifting lever in the active position.

Rising from the inner end of the stem n^8 is a triangular finger N^3, Fig. 5, which is guided within a slot n^{11} in the inner upper side of the bracket n^7. The apex of this finger is in line vertically with a slot n^{12} within the plate l^{16}, so that when said plate is fully depressed, as hereinbefore described, the opposed edge of the slot will impinge against the forward or inclined edge of the finger, and, retracting the latter, will withdraw the tooth from the notch or recess within the lever-arm, whereupon said arm will be automatically returned to its back or normal position by the action of the spring upon the rod n^2, with which the lower arm of said lever is connected, thus through the shifter-frame transferring the belt from the fast to the loose pulley and arresting the motion of the machine.

As a means whereby the stop mechanism shall be actuated in the event of the yarn breaking or terminating during the knitting operation, I pivot in and between lugs n^{13}, formed on the bracket n^7, a crank-lever n^{14}, whose inner or inclined arm bears against the inclined edge of the finger N^3, and whose other or horizontal arm is in line with a vertical drop-rod O, which is guided within brackets or arms o' o^2, extending rearwardly from a post o^3, that rises upward from the frame-plate a^2. Rod O has thereon a stud o^4, which registers with a bayonet-joint o^5, formed in the head of the lower bracket o^2. On the upper end of said rod is a laterally-extending arm o^6, above which projects the weighted arm o^7 of a take-up lever that is pivoted upon one end of a cross-bar o^8, fixed on the post o^3. Secured on or to the top of the latter is an arm o^9, provided on its under side with yarn-guide hooks or eyes o^{10}. On the ends of the cross-bar o^8 are similar hooks or eyes o^{11}, and on a lower bar o^{12} or extension of the arm o' are ordinary friction-disks o^{13}, with guide-hooks o^{14}. (See Fig. 1.) When the machine is in operative condition, the drop-rod stud rests within the horizontal offset of the bayonet-joint, as shown in Fig. 21, thus supporting the drop-rod above the horizontal arm of the crank-lever n^{14}, Fig. 5. The yarn or thread passes from the bobbin or bobbins P, Fig. 1, up through eyes or guide-holes in the arm o', thence through the eyes in the top arm o^9 and the cross-bar o^8, thence through the hooks o^{14} and between the friction-disks, thence over a hook o^{15} on the forward end of the take-up lever, and thence to the yarn-conductor. During the running of the machine the tension of the yarn will depress the hooked arm of the lever, and thus raise the weighted arm thereof; but the instant the tension is released by the breaking or the ending of the yarn the weighted arm of the take-up lever will drop and, striking the side of the arm o^6, will turn inward the latter, and therewith the drop-rod. The stud will be released from the offset, and the rod will thereupon drop upon and depress the opposed arm of the crank-lever n^{14}, whose other arm will force out the triangular finger N^3, and therewith the toothed spring-controlled stem n^8, thus releasing the shifting lever, as and for the purpose hereinbefore described.

When the machine is automatically stopped upon the completion of the widening operation, as previously stated, the stud f^{14} will be in engagement with the inner cam-groove F^3. The operator may thereupon retract said stud and throw the vertical rock-lever F^2 backward, which action through the intermediate mechanism will raise both the movable dial-sections and lock them in the raised position, as hereinbefore described. Now if the sleeve or clutch j^{18} be thrown out of engagement with the pinion j^{17} and into engagement with

the pulley K and the belt be shifted from the loose to the fast pulley the shaft C will be continuously rotated, and the series m' of low links will be successively advanced under the head of the lever l^{18}. The knitting-cams will be continuously revolved, and the result of the operation will be a tubular web, whose length will be determined by the number of low links m'. When the following high link is brought under the lever-head l^{18}, the plate l^{16} will be fully depressed and the machine will be stopped, as before explained.

The web in its entirety as knit by the foregoing-described mechanism will comprise a flat-fashioned selvaged section and a tubular or seamless section and is particularly adapted for use as a stocking-leg blank. When so used, the course of stitches at the narrow or free end of the flat section will be picked upon the hooks of an ordinary circular-knitting machine—such, for example, as the "Branson"—and the ankle, heel, foot, and toe portions of the stocking will be knit thereby in the usual manner. The edges of the flat section will be united by sewing, and the upper end of the tubular section will be hemmed in the usual way.

When the stocking-leg blank has been knit, the operation may be again and again repeated, thus producing a series of connected blanks, which may be cut apart or separated when desired. At the outset of the repeated operation, however, it is necessary, before pressing back the movable dial-section needles, that the stitches be removed therefrom and that their latches be opened. A good way to cast off the stitches is to push the needles radially inward and then retract the same. When the needles are pushed inward, their stitches will bear against and throw back the latches and then surround the shanks of the needles, and when the needles are retracted the stitches will close the latches and escape over the same, as will be clearly understood by a knitting artisan. By means of an ordinary latch-picking hook the latches may then be opened or thrown back.

Immediately before commencing the operation of knitting the flat-fashioned web—that is, before outpressing the needles within the movable dial-sections—I sometimes by preference knit a circular course of loose loops, which not only serves as a guide or line of demarkation for the proper cutting apart of the leg-blanks, but facilitates the transference of the web unto the needles of an ordinary circular knitter for the purpose above stated.

That the knitting-cams may be readily adjusted at will, in order that loose or tight stitches may be knit in the web, I mount the rear extension of the cam-bearing plate g within a recess g^3, formed in the top of the bracket-arm g', and elongate the screw-slot g^4, through which loosely passes the holding-screw g^5. The cam-plate is thus movable radially, but it is protected against lateral and vertical displacement. On the outer end of the plate g is a depending yoke or notched lug g^6, Figs. 3 and 24, which embraces the neck g^7 of a set-screw g^8, adapted to work in the end of the arm g^2. Thus if the screw be properly turned the cam-plate with the cams thereon will be moved inward or outward radially, and in accordance with such adjustment the needles will be more or less retracted by the knitting-cams during their action, thereby forming relatively loose or tight stitches. In order that the degree of adjustment of the cams may be accurately determined, I fix on the end of the plate g a graduated dial g^9 and provide the screw g^8 with an index or pointer g^{10}, adapted to traverse and register upon said dial when the said screw is turned.

The aforementioned loose course of stitches immediately preceding the fashioning operation is effected by first slightly retracting the knitting-cams by the proper manipulation of the set-screw, and then by a turn of the crank-handle revolving the cam-carriage. The cams are thereupon moved to their former or normal position, the movable dial-section needles are outpressed, the clutch is thrown into engagement with the pinion j^{17}, and the belt is transferred from the loose to the fast pulley with the effect before stated.

Let into the sections of the dial-plate is a segmental ring Q, which is detachably secured in place by means of set-nuts q', working on screw-pins q^2, that are fixed to the dial-sections and extend up through the respective segments of the ring, as shown. The function of this ring is to hold down and to prevent jumping of the reciprocating needles. It also acts as a stop or gage for the inpressed needles during the casting off of the stitches or loops at the outset of the fashioning operation, as shown by the dotted lines in Fig. 12. By unscrewing the nuts q' the segments will be released, and the needles may thereupon be removed and others substituted therefor, as occasion may require.

Obviously if an open latch of an outpressed needle be accidentally closed such needle, when acted upon by the knitting-cams, will fail to hook the yarn. To remedy this defect I provide what I term a "latch-guard." It consists of a curved wire q^3, provided with inturned ends q^4, pivoted within sockets q^5 near the ends of the main or stationary segment of the ring Q, so as to span the movable sections immediately above the open latches. (See Figs. 2, 8, 11, and 21ª.) q^6 are small spring-plates, which are secured to the ring Q so as to bear upon the inturned ends of the wire q^3. Before the needles with the open latches are outpressed the latch-guard is raised or swung open, in which condition it is held by the bearing action upon its pivots of the spring-plates q^6, or, in other words, the points of these pivots, when the latch-guard is raised, act as cams to take against the opposed spring-plates. Hence to raise the guard the depress-

ing action of the spring-plates upon the pivots must be overcome. When such needles are outpressed, the guard is restored to its former or operative position, being likewise there maintained by the spring-plates.

I here remark that the flat section of the web may be gradually narrowed instead of widened, in which case the series of movable dial-section needles should not be outpressed at the commencement of the operation; but during each successive or alternate stroke of the cam-carriage the stitches should be successively transferred by the operator from the inner or end needles in each section to the adjacent needles therein, each needle as the stitch is removed therefrom being outpressed. The removal and transference of each stitch would have to be effected by hand, and would, therefore, be a slow and tiresome operation compared with the mechanical widening process hereinbefore described.

In Figs. 25, 26, 26ª, and 27 I have shown a modification of essential features of the invention. In this construction the toothed annulus B is fixed firmly to the sinker and dial bearing cylinder, while the cam-supporting bracket g^2 is bolted upon the stationary frame-plate. The relative positions of the cams and the dial-plate are the same as in the first-described construction; but instead of the cams, as in that construction, being revolved around the stationary dial-plate upon motion being imparted to the annulus the operation will be reversed—that is to say, the cylinder D, with the dial-plate, will be revolved, while the position of the needle-operating cams will remain unchanged. The action of the cams upon the needles will be the same in both constructions.

The sinkers during their rotation will be likewise actuated by the grooved cam-ring i^3, which ring is supported by and upon the inner edge of the flange portion a^6 of the ring a^3, and is maintained in place by means of an arm properly supported by the flange a^6 and extending into a recess in the wall of the cam-ring. This recess is wider than the arm, as seen in Fig. 26ª, so that there will be a movement of the cam-ring when the motion of the cylinder D is reversed in order to throw the sinker-cam into proper time with the knitting-cams, as before explained with regard to the previous construction. The flanged supporting-ring a^3 extends up to the under side of the dial-supporting plate and is provided with a lateral slot 10, concentric with the axis of the vertical rocking-lever F^2. Projecting from the upper arm of the latter into said slot is a pin 10^a, upon which are centrally supported two arms 11, which are pivoted at their opposite ends within a channel or recess 12, formed concentrically in the upper edge of the ring a^3. The movable dial-sections f' f^2 are supported upon pins 13, which are freely contained within vertical holes in the plate E and rest upon the upper edge of ring a^3. The disposition of the supporting-pins 13 is such that during the revolution of the dial they will ride upon the arms 11, respectively. Thus if said arms be alternately raised and lowered during the reciprocation of the dial the movable sections will be correspondingly actuated when their supporting-pins ride upon the oscillating arms. To effect such movement of the arms 11 their lower edges are provided with notches 14, Fig. 27, which are out of line transversely, but are above the path of the pin 10 upon the rocking lever, so that when the latter is moved to and fro by the cams F^3 F^4 during the reciprocation thereof said pin will alternately coincide with the respective notches, and as a consequence the arms will be raised and lowered successively. I remark that when the arms 11 are in their elevated position the upper edges thereof are in line with the upper surface of the ring a^3—that is, the recess 12 is only of sufficient length to contain said arms. The mechanism by which the shaft C is operated has not been illustrated in this construction, as it is or may be identical in all respects with that shown and described in connection with the other or first construction.

The plunger l^6, whose pin l^5 governs the positions of the shoe L and the switch-cam 6, is reciprocated at the proper stages of the knitting operation by the pivoted lever l^{13}. The forward arm of this lever is connected with a stud 15, projecting from the plunger through a slot 16 in the supporting-bracket, and the rear or headed arm of the lever rides upon the links of the pattern-chain M, being held thereupon, as in the former instance, by the spring l^{19}. A step-by-step movement is imparted to this chain by means of cam and pawl-and-ratchet mechanism, similar to that hereinbefore described, and as the medium and low links advance below the lever-head the lever will be oscillated, thus moving the plunger-pin into and out of engagement with the switch-cam-controlling shoe L. The operation of the switch-cam upon the outpressed needles within the movable dial-sections is the same as in the first-described construction—that is, it successively moves said needles into position to be acted upon by the knitting-cams. The shoe L is provided with additional teats or lugs 17, which take against the sides of the bracket during the reciprocation of the dial-plate, and thus limit the movement of the shoe. Instead, however, of using the switch-cam and its operating devices in this construction wherein the dial-plate revolves, I sometimes dispense with said cam, &c., and use for a like purpose mechanism of the following description, reference being had to Figs. 28 to 31, both inclusive.

18 18 represent two segmental arms, which are supported upon the upper edge of the surrounding flange on the dial-bearing plate E. These arms have each a lower rib 19, which registers with a guide groove or way formed in said flange. The inner corners of

the forward ends of these arms are oppositely beveled or inclined, as seen, and normally occupy the positions shown in Fig. 28—that is, in contact with the first outpressed needles in the movable dial-sections, respectively. Thus if either of said corners be moved forward—*i. e.*, in the direction of the adjacent arrow-heads *v*—it will impinge against the contiguous needle-heel and move it inward into position to be acted upon by the knitting-cams. These cams are represented in dotted outline in Fig. 28. In order to impart a proper step-by-step movement to these arms during the reciprocation of the dial, so that the outpressed needles therein will be moved successively inward at proper intervals, I provide the outer edges of the said arms with ratchet-teeth 20, with which engage pawls 21. Each of these pawls is pivoted upon a post or stud 22, projecting upward from a plunger 23, which plays within a radial recess within the dial-bearing plate E. The plunger is kept normally projected by means of a spiral spring 24, which is interposed between the end of the recess and that of the plunger, as seen most clearly in Fig. 30. The pawl is held normally in engagement with the ratchet-teeth by means of a flat spring 25, which is so secured to a lug 26, extending laterally from the post 22, as to bear against the pawl and force it inward.

It will be apparent that if one of the plungers 23 be pushed inward the pawl connected therewith will move the engaged ratchet-arm a distance of one tooth, and that when said plunger is released the spring 24 will return it to its out or normal position, and thus move the pawl into engagement with the following tooth for a succeeding operation. The plungers are actuated during the reciprocation of the dial in the same manner as the plunger-releasing pin is operated in the first-described construction—that is to say, by the bevel-cornered plate l^{16}, mounted upon the inner end of the chain-oscillated lever l^{13} and adapted to be thrown into and out of the path of the plungers at certain intervals, as previously stated.

The beveled or working ends of the arms 18 are offset or cut away on opposite sides, as seen in Fig. 28, so that they will overlap, Fig. 31, as they approach each other, and thus act upon the last outpressed needles within the dial-sections.

Before the commencement of each fashioning operation the arms 18 should be moved back to their first or normal position.

It will be obvious that if the rotatable bracket-arm g' in the first-described construction be provided with inprojecting corners, as represented by the broken lines l^{160} on the fixed bracket-arm in Fig. 28, the ratchet-needle-inpressing mechanism just recited could be readily substituted for the switch-cam devices shown and described in connection with the first-mentioned construction, in that during the rotation of the bracket-arm the projecting corners would successively impinge against and depress the plungers, as and for the purpose above specified.

In Figs. 32, 33, and 34 I have shown certain features of the invention as embodied in a circular-knitting machine of that well-known type wherein a cam-cylinder is rotated around a vertically-grooved needle-cylinder, my aim being to enable such machines to knit a flat selvaged web having as many stitches in each course thereof as there are needles within the needle-cylinder. To do this it is required to reverse the movement of the cam-cylinder after each complete actual revolution thereof, and in order so to reciprocate said cylinder it is necessary that adjacent sections or series of needles, each occupying a space equal to or greater than the actual width of the knitting-cams, be alternately in succession thrown out of and into action with the cams. Automatically to effect this movement of the two series of needles I make the same with elongated shanks 27, which project some distance below the bottom of the cylinder. Above and below each series of needles are segments 28 29, respectively, which are supported upon the ends of a vertically-movable rod 30, extending through a post 31, rising from the bed-plate of the machine. The posts 31 have lateral lugs 32, between which is supported a cross-bar 33, provided near its ends with cam-slots 34, into which extend from the rods 30 studs or pins 35. These studs or pins extend through vertical guide-slots 36 in the posts 31. One of the cam-slots 34 has two oppositely-inclined ways—that is, it is Λ-shaped—while the other slot has one inclined way and a lower horizontal way or extension, this inclined way being parallel and in line with the like way on the double-inclined slot, as seen. Normally the pin on one of the posts engages the lower portion of the inner way of the first-named slot, and the pin on the opposite post engages the end of the horizontal way of the other cam-slot. The construction and relative arrangement of the segments are such that when the pins are engaged in this manner the upper segments 28 are in the same horizontal plane, while the lower segments 29 are similarly disposed in a lower plane, these planes being out of the paths traversed by the respective needles in their usual knitting operation. When the bar is moved in the direction indicated by the arrow 1^a a distance equal to the length of the horizontal way in the left cam-slot, the post and its connections adjacent to said slot are unacted upon, while the inner way of the other cam-slot forces up the pin on the opposite post, thus elevating the latter and its segments 28 29. The lower segment 29, in its upward movement, abuts against the shanks of the opposed series of needles and raises the latter sufficiently to throw their heels above or out of action with the knitting-cams. Continuing the movement this post is depressed, its upper segment im-

pinging against the tops of the idle needles and returning the latter to their first or active position. During this continued movement of the bar the other post with its segments is raised by the action of the inclined way of the appropriate cam-slot, thereby throwing the other series of needles out of action with the knitting-cams. Reversing the movement of the bar a distance commensurate with the throw of the inclined way last mentioned the posts with their segments are thrown into the previous-acting positions—that is, one set of needles is thrown into action while the other set is thrown out of action. Again, correspondingly reversing the throw of the bar the conditions of the segments and the respective sets or series of needles are reversed. It is to be remembered that it is only the inclined way of the left-hand cam-slot and the oppositely-inclined or left-oblique way of the other slot that operate to reciprocate alternately the posts and their segments, the right-oblique way of the latter slot and the horizontal way of the other slot being brought into play only when it is desired to throw all the segments out of action—that is, into their first-described position, as represented in Fig. 34 of the drawings. In order to reciprocate the bar as just described, I pivot thereto the upper arm of the rocking lever F^2, which is adapted to be actuated by the cam-grooves F^3 F^4 upon the bevel-wheel *c*. The shaft upon which this wheel is mounted may be rotated by a crank-handle or by suitable power mechanism. The construction and operation of the rocking lever and its actuating devices are identical with those of the like parts in the dial-machines hereinbefore described, and therefore require no further description.

In Figs. 35, 36, and 37 I have shown a modification of the devices just referred to for alternately throwing into and out of action in succession the two series of long-shank needles in an ordinary circular knitter. The bar 33 in this alternative construction is connected with and reciprocated by the rocking lever, as in the other construction; but the cam-slots 34 extend vertically through said bar instead of horizontally. Engaging with each of these slots is a pin or stud fast on the end of a radial arm 37, which extends through guide-brackets 38 and carries on its inner end a segment 39. Each segment has a series of vertical holes therein, through which extend the elongated shanks of the needles, and the guideways for the latter in the needle-cylinder are inclined inwardly toward their lower ends, as seen. Thus when the bar is reciprocated its cam-slots will successively move in and out the arms 37, and therewith the segments, which latter will alternately throw the respective series of needles connected therewith into and out of engagement with the knitting-cams. (See Fig. 37.)

As seen in Fig. 38, instead of perforating the segments and extending the needle-shanks through the same, I sometimes form in the upper surface of each of the segments a groove or channel 40, into which extends a series of vertically-channeled plates mounted within the needle-grooves. The needle-shanks work within these plates when actuated by the knitting-cams; but when the arms 37 are reciprocated said plates are moved in and out in order to engage and disengage the needles and cams. By this construction liability of springing or bending of the needle-shanks during their horizontal movement is obviated.

In Figs. 39 to 43, both inclusive, I have shown a modification wherein the cams are moved into and out of engagement with the needles in the vertical cylinder. In this construction the needle-cylinder is secured to and revoluble with the toothed annulus B, which is driven by the bevel-wheel on the shaft C. There are two sets of needles in this cylinder, one set R being mounted in one half of the periphery and the second set R′ in the other half. The shanks of the two sets of needles are the same length. Each needle is provided with out-projecting lugs—one 41 at its lower end and the other 42 on the body of the shank. The lugs 42 on one set of needles R are higher than the like lugs on the other set R′. (See Fig. 39.) Rising upward from the bed-plate adjacent to the needle-cylinder is a bracket 43, which is provided with two transverse guideways 44 therein, in each of which is mounted a block 45, which bears on its inner or forward end a set of knitting-cams G′ of usual construction. The blocks may be pushed inward, so that the knitting-cams shall lie near to or against the needle-cylinder, and may then be locked or clamped in such position by the turning of set-screws 45^a, which are arranged in the side of the bracket in line with the adjacent edges of the blocks, respectively. The relation of the two sets of knitting-cams is such that during the rotation of the needle-cylinder the lugs 42 on the needles R will engage the upper cams, while the light lugs on the other needles R′ will engage the lower cams. Thus both sets of needles will be successively operated by the cams, and if the yarn be thereupon delivered to said needles through the guide H a tubular knit fabric will be produced. By the above construction it will be evident that if the lower set of cams be thrown out of the path traversed by the lugs 42 of the needles R′, after acting thereupon, and the cylinder be revolved till the lugs 42 of the other set of needles R then actuated by the upper cams have all cleared or passed the latter, the direction of movement of the cylinder may be reversed; that if these latter cams be held in the active position they will again act upon the lugs 42 of the needles R during the reverse movement of the needle-cylinder; that meanwhile if the lower cams be thrown into the active position they will act upon the lugs of the needles R′ as the latter move past said cams, and that if during the action of the

lower cams the upper cams be thrown into the idle position the direction of movement of the cylinder may be again reversed when the lugs 42 have cleared or have been acted upon by said lower cams. Thus if both sets of knitting-cams be released by the proper turning of the set-screws, and then be alternately thrown into and out of action with the respective needle-lugs 42, and the needle-cylinder be reciprocated, there will be knit a flat selvaged web possessing in each course thereof as many stitches as there are needles in the cylinder.

In order automatically to move the cams, as and for the purpose just described, I provide the outer ends of the blocks 45 with extensions 47, to which are adapted to be pivoted the upper arms of vertical levers F^{2a}, respectively. The lower arms of these levers are connected by means of pins 48 with suitably-shaped cam-grooves F^{3a}, formed in the circumference of a sleeve 49, which is mounted upon the shaft C. This cam-sleeve is connected with the shaft by means of a pin 50, passing through a slot or recess 51 in the end of the sleeve, so that the latter will have some lost motion on the shaft when the direction of movement of the shaft is reversed, the object being to keep the cam-grooves in proper time with the knitting-cams.

The upper arms of the levers F^{2a} are pivotally connected with the block extensions by means of spring-pressed pins 52, which may be retracted at will in order to release the blocks. These pins extend through recesses 53, formed in the heads of the arms, respectively, and are each held normally projected by means of a spring 54, interposed between the wall of the recess and a collar 55 on the pin. The latter is provided with an exterior head or knob 56, which has a stud 57 on its inner side. This stud, when the pin is projected, registers with a hole in the side of the arm and is of such length that if the pin be withdrawn from the block extension the stud will be released, whereupon if said pin be slightly turned, so as to move the stud laterally beyond the hole, said stud will bear against the side of the arm and keep the pin retracted.

In order to adapt the duplex cam and needle mechanism just described to the knitting of a flat-fashioned web, I extend through the bracket 43, near its base, a shaft 60, which bears on its inner end the switch-cam 6 and on its outer end a head 6^a, with a V-shaped recess in its upper edge, with which recess is adapted to engage a pin on the forward end of the lever l^{13}. In construction and operation this lever is similar to the lever shown in Fig. 25, its position being likewise controlled by the chain-links. On about the middle of this shaft, within a recess 61 formed in the bracket, is secured a leather-faced shoe L^a, which is held in frictional contact with the edge of the annulus by means of a small spring 6^b, interposed between the shoe and the wall of the recess. When the forward arm of the lever is depressed, the lever-pin will enter the V-recess in the head 6^a and thus move the latter and the parts connected therewith into the relative positions shown in Figs. 39 and 42 and there lock the same—that is, so that the switch-cam will occupy the intermediate or idle position; but when said arm is raised the pin will be removed from the recess, and, said head and adjuncts being free, the annulus during its movement will slightly turn the shoe, and consequently cant or tip the switch-cam. During the reciprocation of the annulus said cam will, of course, be alternately oppositely canted. Now it will be seen that if two adjacent series of needles, as *ab bc*, Fig. 40, one series in each set R R′, be fully depressed, so as to throw their butts or lugs 41 below the plane of the switch-cam and their lugs 42 below the planes of the respective knitting-cams, said butts or lugs 42 will be successively moved into the planes of said cams during the reciprocation of the cylinder in the same manner, substantially, as were the outpressed needles in the first-described construction. The result in both cases is identical—to wit, a gradual widening of the flat fabric being knit.

The relation of the knitting-cams and the other parts should be such that the needles will be moved upward when their respective cams are in the out or idle position, and the needle-heels when depressed should lie just below the base-lines of the respective knitting-cams.

The shaft C may be reciprocated manually or automatically, as in the other constructions hereinbefore described.

Having thus described my invention, I claim as new and wish to secure by Letters Patent—

1. The combination, with a circular needle-carrier, a circular row of needles therein arranged in independent sets or series, and knitting-cams adapted normally to engage and actuate said needles, the cam-engaging portions of the needles in each set or series occupying a line or space not less than the actual width of the knitting-cams, of a mechanism whereby at the completion of each stroke of the knitting devices the cams are prevented from engaging the needles of the initial set or series of needles in the stroke, thus permitting of a reversal of the direction of movement of the knitting devices, substantially as described.

2. In a knitting-machine, the combination, with the needle-carrier, the circular row or series of needles therein, and the knitting-cams adapted to engage and actuate said needles, of provisions whereby two adjacent series of needles, each series equal to or greater than the actual width of the knitting-cams, are alternately moved into and out of action during the knitting operation to permit the reversal of the motion of the operating mech-

anism upon the formation of each successive course of stitches, substantially as described.

3. In a knitting-machine, the combination, with the needle-carrier, its needles, and the knitting-cams, said carrier having two reciprocating sections, each of which is adapted to contain a series of needles whose projecting heels occupy a space or line equal to or greater than the actual width of the knitting-cams, of provisions whereby said sections are alternately reciprocated during the knitting operation in order to throw the series of needles therein successively into and out of action to permit the reversal of the motion of the operating mechanism upon the formation of each successive course of stitches, substantially as described.

4. In a knitting-machine, the combination, with the needle-carrier, its needles, and the knitting-cams, of means for independently supporting two adjacent series of said needles, each series equal to or greater than the actual width of the knitting-cams, a rocking lever, provisions for connecting the same with the independent needle-supports, and mechanism adapted to actuate the said rocking lever to reciprocate successively the needle-supports, substantially as described.

5. In a knitting-machine, the combination, with the needle-carrier, its needles, and the knitting-cams, of means for independently supporting two adjacent series of said needles, each series equal to or greater than the actual width of the knitting-cams, a rocking lever, provisions for connecting the same with the independent needle-supports, a driving-shaft, and a cam or cams operated thereby and adapted to actuate the said rocking lever to reciprocate successively the independent needle-supports, substantially as described.

6. In a knitting-machine, the combination, with the dial, its needles, and the knitting-cams, said dial having two reciprocating sections, each of which is adapted to contain a series of needles whose projecting heels occupy a line or space equal to or greater than the actual width of said cams, of devices for independently supporting said sections, a rocking lever, provisions for connecting the same with said devices, and mechanism adapted to actuate the said rocking lever, whereby the reciprocating sections are raised and lowered alternately to throw the needles therein into and out of operative condition, substantially as described.

7. In a knitting-machine, the combination, with the dial, its needles, and the knitting-cams, said dial having two reciprocating sections, each of which is adapted to contain a series of needles whose projecting heels occupy a line or space equal to or greater than the actual width of said cams, of the reciprocating bars supported below said sections and adapted to maintain the same normally in a raised position, the horizontal lever engaging said bars, and the rocking lever connected with said horizontal lever, said bars and sections being provided with feet and cavities adapted to be engaged and disengaged alternately by the action of said rocking lever, substantially as described.

8. In a knitting-machine, the combination, with the dial, its needles, and the knitting-cams, said dial having two reciprocating sections, each of which is adapted to contain a series of needles whose projecting heels occupy a line or space equal to or greater than the actual width of said cams, of the reciprocating bars supported below said sections and adapted to maintain the same normally in a raised position, the horizontal lever engaging said bars, the rocking lever connected with said horizontal lever, and the cam mechanism adapted to operate the said rocking lever, said bars and sections provided with feet and cavities adapted to be engaged and disengaged alternately by the action of said rocking lever, together with the headed pins or screws depending from said sections and the interposed compression springs, substantially as described.

9. In a knitting-machine, the combination of the needle-carrier, its needles, the knitting cams, the shaft C, geared with the knitting mechanism and adapted to operate the same, the pinion and means for connecting it to said shaft, the rack meshing with said pinion, the traversing frame supporting said rack, and the mechanism for reciprocating said frame, together with provisions whereby two adjacent series of needles, each series equal to or greater than the actual width of the knitting-cams, are alternately moved into and out of action during the reciprocation of said frame, substantially as described.

10. In a knitting-machine, the combination, with the dial, its needles, and the knitting-cams, said dial having two reciprocating sections, each of which is adapted to contain a series of needles whose projecting heels occupy a line or space equal to or greater than the actual width of said cams, of the reciprocating bars supported below said sections and adapted to maintain the same normally in a raised position, the horizontal lever engaging said bars, the rocking lever connected with said horizontal lever, the double-grooved cam adapted to operate the said rocking lever, said bars and sections provided with feet and cavities adapted to be engaged and disengaged alternately by the action of said rocking lever, the shaft C, geared with the knitting mechanism and adapted to operate the same, the pinion and means for connecting it to said shaft, the rack meshing with said pinion, the traversing frame supporting said rack, and the mechanism for reciprocating said frame, substantially as described.

11. In a knitting-machine, the combination of the dial, its needles, and the knitting-cams, said dial having two vertically-movable sections adapted each to contain a series of needles whose projecting heels occupy a line or

space equal to or greater than the actual width of said cams, the vertical rocking lever, the connecting devices between the same and the movable sections, and provisions whereby said lever may be held retracted in order to support said sections in raised position, substantially as described.

12. In a knitting-machine, the combination of the dial, its needles, and the knitting-cams, said dial having two vertically-movable sections adapted each to contain a series of needles whose projecting heels occupy a line or space equal to or greater than the actual width of said cams, the vertical rocking lever, the connecting devices between the same and the movable sections, the spring-controlled pin within the lower end of said lever, provided with the stud f^{16} and the stud f^{14}, the shaft C, geared with and adapted to actuate the knitting mechanism, the double-grooved cam operated by said shaft and adapted to receive the said stud f^{14}, and the bracket depending from the main supporting-frame and provided with the offset guide-slot, through which projects the head of said stud, substantially as described.

13. In a knitting-machine, the combination, with the needle-carrier, its needles, and the knitting-cams, said carrier having two vertically-movable sections adapted each to contain a series of needles whose projecting heels occupy a line or space equal to or greater than the actual width of said cams, of the vertical rocking lever, the connecting devices between the same and the movable sections, the double-grooved cam adapted to operate said lever, the shaft C, geared with the knitting mechanism and adapted to operate the same, the pinion loosely mounted on said shaft, the rack meshing with said pinion, the traversing frame supporting the rack, the mechanism for reciprocating said frame, and the clutch device mounted on the shaft C and adapted to be moved into engagement with said pinion at certain stages of the knitting operation, substantially as described.

14. In a knitting-machine, the combination, with the needle-carrier, its needles, the knitting-cams adapted to engage and actuate said needles, and the provisions whereby said cams and needles are disengaged after the formation of each course of stitches and re-engaged upon the reversal of the motion of the operating mechanism to form a succeeding course of stitches, of devices for automatically moving a predetermined number of outpressed needles into the path of the knitting-cams upon the completion of a predetermined course of stitches or series of courses, substantially as described.

15. In a knitting-machine, the combination, with the needle-carrier, its needles, and the knitting-cams, said carrier having two reciprocating sections adapted, as described, to be alternately raised and lowered, and the needles or a number thereof within said sections adapted to be pressed into inoperative position, of the shouldered switch-cam adjacent to said knitting-cams and adapted upon the completion of a predetermined course of stitches or series of courses to direct said outpressed or inoperative needles successively into operative position, the shoe connected with said switch-cam and adapted to control the position thereof, and mechanism, substantially as described, for operating said shoe at prescribed intervals.

16. In a knitting-machine, the combination, with the flanged dial-bearing plate, the dial thereon, its needles, the revoluble cam-carriage and the knitting-cams borne thereby, said carrier having two sections adapted to be alternately raised and lowered, as described, and the needles or a number thereof within said sections adapted to be pressed out of the path of said cams, of the shouldered switch-cam adjacent to said knitting-cams and adapted upon the completion of a predetermined course of stitches or series of courses to direct said outpressed or inoperative needles successively into operative position, the recessed friction-shoe mounted upon the flange of the dial-bearing plate connected with said switch-cam and adapted to control the position thereof, the vertical plunger contained within the cam-carriage and provided with the lateral pin or stud l^5, adapted to engage the recess in the friction-shoe, the devices for maintaining said plunger elevated, the outprojecting pin l^{11}, engaging said devices, the cam-plate l^{16} for acting upon this pin and thus releasing said devices to permit the plunger to descend, the lever supporting said plate, and the pattern mechanism for controlling the position of said lever, together with provisions whereby said plunger is returned to its raised or normal position at prescribed intervals, substantially as described.

17. In a knitting-machine, the combination, with the needle-carrier, its needles, the cam-carriage, and the knitting-cams borne thereby, of the switch-cam adjacent to said knitting-cams and adapted upon the completion of a predetermined course of stitches or series of courses to direct outpressed or inoperative needles successively into operative position, the shoe connected with said switch-cam and adapted to control the position thereof, and mechanism, substantially as described, for operating said shoe at prescribed intervals.

18. In a knitting-machine, the combination, with the flanged dial-bearing plate, the dial thereon, its needles, the reciprocating cam-carriage, and the knitting-cams borne thereby, of the shouldered switch-cam adjacent to said knitting-cams and adapted upon the completion of a predetermined course of stitches or series of courses to direct outpressed or inoperative needles successively into operative position, the recessed friction-shoe mounted upon the flange of the dial-bearing plate and connected with and adapted to control the position of said switch-cam, the vertical plunger containing within the cam-

carriage and provided with the lateral pin or stud l^5, adapted to engage the recess in the friction-shoe, the spring-pressed stud adapted to lock the plunger in the raised position, the releasing-pin projecting beyond the cam-carriage, the cam-plate l^{16}, adapted to inpress said releasing-pin to free the plunger and permit it to drop, the lever supporting said plate, and the pattern mechanism for operating said lever, together with the movable cam-guided segment mounted upon the supporting-frame and adapted to return the plunger to its raised or normal position, substantially as described.

19. In a knitting-machine, the combination, with the needle-carrier, its needles, and the knitting-cams, said carrier having two reciprocating sections adapted, as described, to be alternately raised and lowered, of the switch mechanism for automatically moving a predetermined number of outpressed or inoperative needles successively into operative position upon the completion of a predetermined course of stitches or series of courses, the cam-plate l^{16} for engaging said mechanism, the supporting-lever l^{13}, the pattern-chain, the sprocket-wheel, its shaft, the ratchet-and-pawl devices connected with and adapted to turn said shaft, and the cam mounted, as described, upon the shaft C and adapted to operate said ratchet-and-pawl devices, together with provisions whereby the said switch mechanism is thrown into inactive position at predetermined intervals, substantially as set forth.

20. In a knitting-machine, the combination, with the needle-carrier, its needles, and the knitting-cams, said carrier having two vertically-movable sections adapted each to contain a series of needles whose heels occupy a line or space equal to or greater than the actual width of said cams, of the vertical rocking lever, the connecting devices between the same and the movable sections, the double-grooved cam adapted to operate said lever, the shaft C, geared with the knitting mechanism and adapted to operate the same, the pinion loosely mounted on said shaft, the rack meshing with said pinion, the traversing frame supporting the rack, the mechanism for reciprocating said frame, the driven pulley K, and the clutch device mounted on the shaft C, said clutch device adapted to be moved into and out of engagement with said pinion and pulley at certain stages of the knitting operation, substantially as described.

21. In a knitting-machine, the combination, with the driving-shaft J and the fast and loose pulleys thereon, of the shifting-lever and its connected belt-carrying frame, means, such as a spring, for normally holding said lever in idle position, devices for locking the lever in active position, the plate l^{16}, adapted to operate said locking devices, the lever bearing said plate, and the pattern-chain with its link or links adapted to actuate said lever and plate, together with the mechanism for supporting and operating said chain, substantially as described.

22. In a knitting-machine, the combination, with the driving-shaft J and the fast and loose pulleys thereon, of the shifting-lever and its connected belt-carrying frame, means, such as the spring, for normally holding said lever in idle position, the spring-projected stem provided with the tooth adapted to engage the said lever and lock it in the active position, the finger rising from said stem, the vertically-movable plate adapted, as described, to impinge against and retract said finger, the lever bearing said plate, and the pattern-chain with its high link or links adapted to actuate said lever and plate, together with mechanism for supporting and operating said chain, substantially as described.

23. In a knitting-machine, the combination, with the driving-shaft J and the fast and loose pulleys thereon, of the shifting-lever and its connected belt-carrying frame, means, such as the spring, for normally holding said lever in idle position, the spring-projected stem provided with the tooth adapted to engage the said lever and lock it in the active position, the finger rising from said stem, the crank-lever mounted, as described, with close relation to said finger, the vertical drop-rod above said lever, provided with the laterally-extending arm, the post o^3, the bracket thereon, means for supporting said rod within said bracket and permitting it to drop under the circumstances stated, and the take-up lever mounted above said laterally-extending arm and adapted to receive the knitting-yarn and to be acted upon thereby, substantially as described.

24. In a knitting-machine, the combination, with the dial, its needles, and the knitting-cams, of the ring Q and the latch-guard pivoted thereon, substantially as described.

25. In a knitting-machine, the combination, with the dial, its needles, and the knitting-cams, of the ring Q, mounted upon said dial, as described, the screws q^2, and the set-nuts q' thereon, substantially as set forth.

26. In a knitting-machine, the combination, with the dial, its needles, and the knitting-cams, of the ring Q, the latch-guard pivoted therein, and the springs adapted to bear upon the pivots of said latch-guard, substantially as described.

27. In a knitting-machine, the combination of the sinker-cylinder, its sinkers, the dial, its needles, the knitting-cams, the cam-ring for operating said sinkers, the ring i^4, the flanged ring a^3, the adjusting-screws i^5, the revoluble annulus B, and provisions whereby said annulus is connected with and adapted to operate the sinker cam-ring, substantially as described.

28. In a knitting-machine, the combination, with the sinker-cylinder, its sinkers, the sectional dial, and the mechanism for operating

the movable sections of said dial, of the needles, the knitting-cams, the recessed cam-ring for actuating said sinkers, the flanged ring a^3, the revoluble annulus B, the sliding bars or bolts mounted upon said annulus, and the ring i^4, with its eccentric groove adapted to operate said bars or bolts, substantially as described.

29. In a knitting-machine, the combination of the sinker-cylinder, its sinkers, the dial, its needles, the knitting-cams, the cam-ring for operating said sinkers, the ring i^4, the flanged ring a^3, the adjusting-screws i^5, the revoluble annulus B, provisions whereby said annulus is connected with and adapted to operate the sinker cam-ring, the ring i^6, resting upon the sinker-ring, and the screw-posts i^8 between the ring and the dial, substantially as described.

30. In a knitting-machine, the combination of the needle-carrier, its needles, and the knitting-cams, a section of said carrier supporting a series of needles, the cam-engaging portions of which occupy a line or space equal to or greater than the actual width of the knitting-cams, together with mechanism adapted to move said cam-engaging portions simultaneously into or out of active position, substantially as described.

In testimony whereof I have hereunto affixed my signature this 18th day of January, A. D. 1890.

JOSEPH BENNOR.

Witnesses:
GEO. W. REED,
JOHN NOLAN.