Aug. 12, 1941. S. R. HOWARD 2,252,462

PACKAGE

Filed July 28, 1937 2 Sheets-Sheet 1

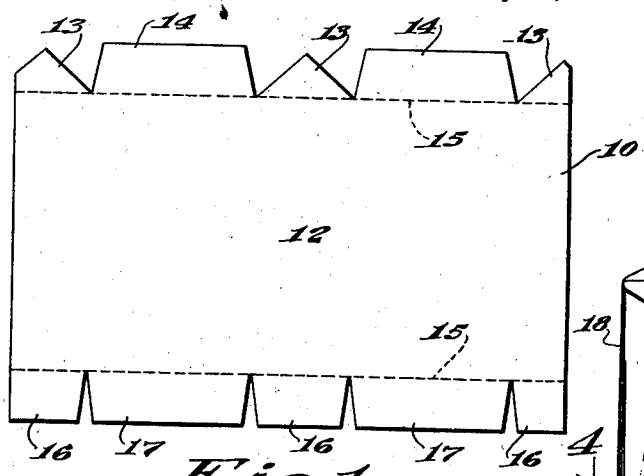

Fig. 1

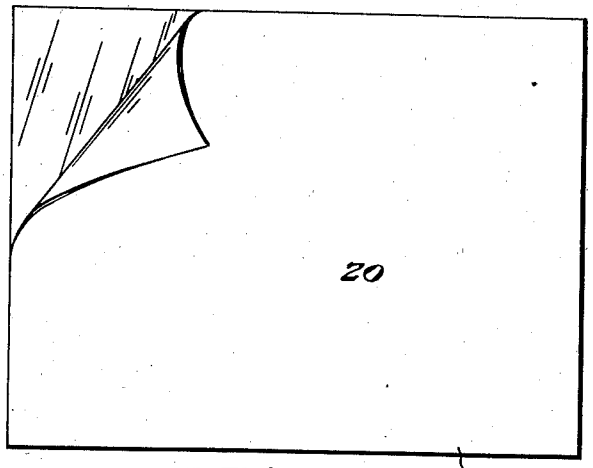

Fig. 2

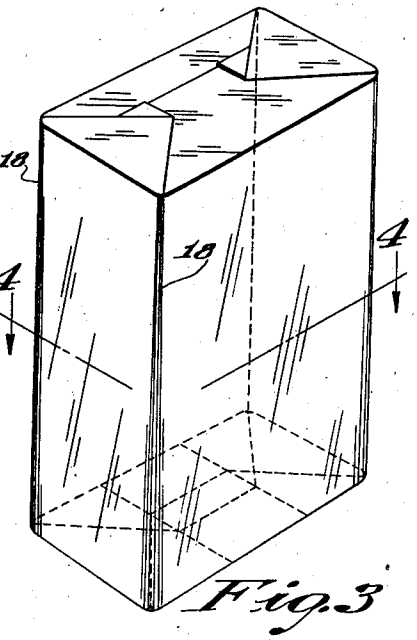

Fig. 3

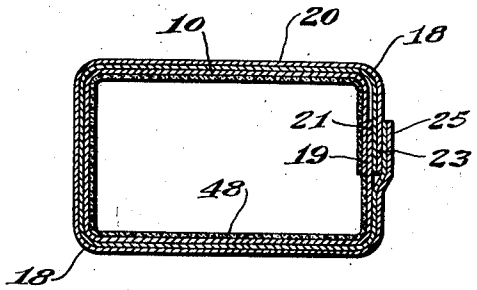

Fig. 4

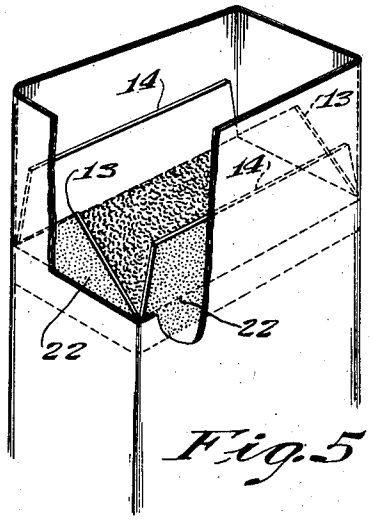

Fig. 5

INVENTOR
Stanley R. Howard
BY J. Stanley Churchill
ATTORNEY

Aug. 12, 1941. S. R. HOWARD 2,252,462

PACKAGE

Filed July 28, 1937 2 Sheets-Sheet 2

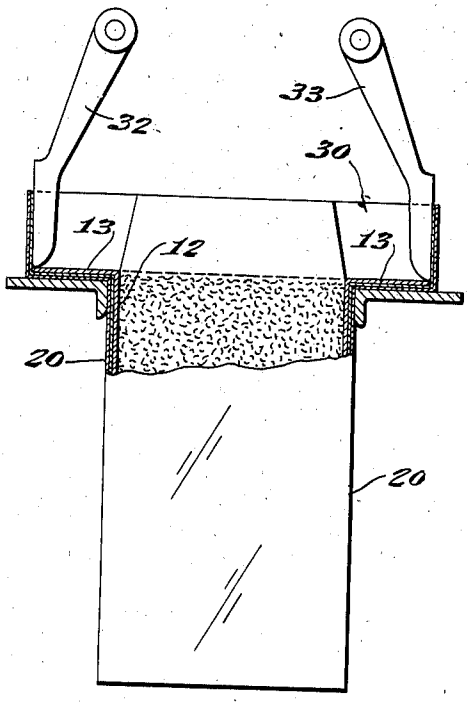

Fig. 6

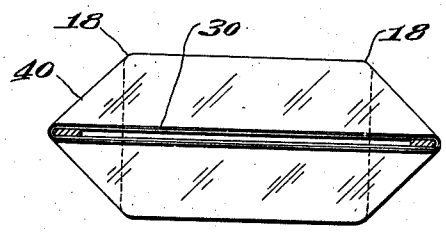

Fig. 7

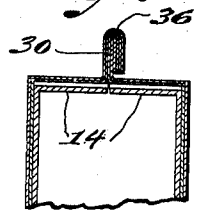

Fig. 8

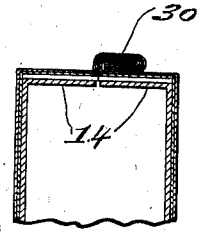

Fig. 9

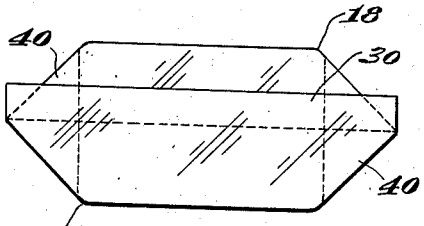

Fig. 10

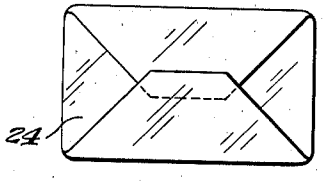

Fig. 12

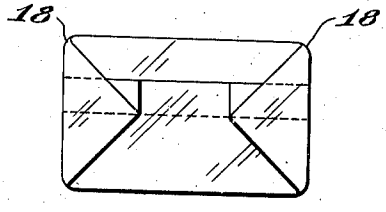

Fig. 11

INVENTOR
Stanley R. Howard
BY J. Stanley Churchill
ATTORNEY

Patented Aug. 12, 1941

2,252,462

UNITED STATES PATENT OFFICE

2,252,462

PACKAGE

Stanley R. Howard, Milton, Mass., assignor to Pneumatic Scale Corporation, Limited, Quincy, Mass., a corporation of Massachusetts

Application July 28, 1937, Serial No. 156,155

4 Claims. (Cl. 229—87)

This invention relates to a novel package.

In general the object of the invention is to provide a novel construction of package possessing substantial strength, moisture resistance, and rigidity, which may be economically manufactured, which presents an unusually attractive appearance and in which the top of the package is closed in a novel and highly efficient manner, adapted to afford a maximum protection to the commodity contained within the package.

With this general object in view and such others as may hereinafter appear, the invention consists in the package hereinafter described and particularly defined in the claims at the end of this specification.

In the drawings, illustrating the preferred embodiment of the invention, Fig. 1 is a blank from which the present carton may be constructed and which comprises the inner section or body portion of the completed carton; Fig. 2 is a composite wrapper of metal foil and paper; Fig. 3 is a perpective view of the completed carton; Fig. 4 is a section on the line 4—4 of Fig. 3; Fig. 5 is a perspective detail of the top of the carton before the top closing operation is performed; Figs. 6 to 11 inclusive are detail views showing the various steps taken in producing the novel top fold of the present package and Fig. 12 is a detail view of the usual bottom fold preferably employed in the production of the present package.

In the drawings, the present package comprises a container formed from a carton blank comprising a body portion provided with top and bottom flaps projecting therefrom. The bottom flaps of the carton may be closed and sealed in any usual or preferred manner. Provision is made for enclosing the carton within a novel wrapper, adapted to afford maximum protection for the packaged commodity, comprising a composite sheet formed by laminating a thin metal foil and a paper sheet and the wrapper is disposed with the metal foil forming the outer surface of the wrapped package. The paper sheet of the laminated metal foil-paper wrapper may and preferably will be affixed to the body portion of the carton and the extended lower end of the wrapper folded and sealed in any usual or preferred manner upon the previously folded bottom flaps of the carton. The upper portion of the wrapper is preferably affixed to the extended side flaps of the carton and the said upper portion and extended side flaps are folded and sealed as one piece to form a top closure for the carton in a novel and superior manner thus eliminating the separate operation of first closing the carton flaps. The top closing operation is preferably performed by elongating the upper portion of the wrapper to bring together the two half sections of such upper portion and then folding and overfolding said half sections down upon the surface of the wrapper carton. The triangular shaped end tabs formed as a result of this operation are then folded over and adhesively or otherwise secured to the previously folded down portion of the upper end of the wrapper as will be described, forming a tight and highly efficient top closure for the carton.

Referring now to the drawing which as above stated illustrates the preferred embodiment of the invention, 10 represents a carton blank preferably composed of light, flexible board stock from which the present wrapped package may be produced. The carton blank comprises a body portion 12 having top flaps 13, 14 and bottom flaps 16, 17 for forming the closures of the top and bottom of the carton. Provision is made for scoring the lines 15 connecting the flaps 13, 14 and 16, 17 with the body portion 12 in order to provide sharply defined corners at the top and bottom of the carton formed from the carton blank. The body portion of the carton is, however, preserved otherwise free from score lines so that when the blank is folded around the usual forming block in producing the carton, the vertical corners 18 of the carton are caused to assume a definitely rounded shape and when wrapped as will be described, this rounded shape imparts to the finished package a characteristic and highly attractive appearance.

In the manufacture of the package the carton may in general be formed and filled in accordance with the usual practice and it is preferred to wrap the carton blank about the usual forming block of a carton forming machine and to fold and seal the bottom flaps of the carton in the usual manner. It will be noted that the carton blank 10 is cut in such a manner that when the carton is formed, the side seam or overlapping edges 19, 21, see Fig. 4, will be located on one of the narrow side panels of the carton, away from the corner—as is the usual practice—in order that the overlapping portions will not interfere with the forming of the rounded shape on the corners 18. In this condition the partially formed carton may then be wrapped and in accordance with the present invention, the wrapper 20 comprises a composite metal foil and paper sheet. The metal foil and paper sheet may be laminated to form the composite wrapper 20 in

any usual or preferred manner. The composite wrapper 20 may be wrapped about the carton while the latter is on the block with the metal foil forming the outer layer of the composite wrapper and provision is made for adhesively securing the wrapper to the extended side flaps 13, 14 and also to the body portion of the partially formed carton by a body of adhesive 22 which is arranged to extend at least about the mouth of the body portion of the carton in order to provide a tight closure between the wrapper and the body portion at the upper portion of the latter, so that during the subsequent filling of the carton the material is prevented from entering between the wrapper and the body portion of the carton. The overlapping edges 23, 25, see Fig. 4, forming the side seam of the wrapper is likewise arranged to extend along one of the narrow side panels, instead of at the corner 18. In some instances it may be desirable to adhesively affix the wrapper to the entire surface of the body portion of the carton. The lower portion 24 of the wrapper is preferably arranged to extend below the body portion of the carton thus supported upon the block and is then folded and sealed to form a wrapped closure for the previously closed and sealed bottom flaps 16, 17 of the carton and any usual or preferred method may be employed in folding the bottom portion of the wrapper and of adhesively affixing the overlapped portions thereof. It will be noted that the bottom flaps 16, 17 are cut at a slight angle so that when the flaps are folded over to form the bottom of the carton, the full thickness of the flaps will not extend out to the edge of the carton. This construction affords a relief along the bottom edges of the carton over which the extended end of the wrapper is folded to produce a softer or more rounded corner fold in accordance with the general design of the package.

After the carton has been partially formed and wrapped, as thus described, it is removed from the forming block and may then be filled in the usual or preferred manner. When packaging finely divided material such as coffee, it is preferred to fill the carton in such a manner as to compress the material within the carton and also to an extent such as when the top closure is completed the material will be held within the carton under some degree of pressure thus minimizing the amount of air retained within the carton after the latter has been filled and closed and assisting in retaining the flavor of the coffee or other material. In addition the complete filling of the carton serves to effectively round out the corners 18 of the carton and to present a smooth, wrinkleless body portion, thus contributing to the attractiveness of the appearance of the complete package. After the filling operation, see Fig. 5, the package is ready for the top closing operation and as the top flaps 13, 14 are adhesively secured to the extended ends of the wrapper, as described, the extended wrapper 20 and the top flaps 13, 14 are folded and sealed as one piece to provide a novel and superior top closure for the package as will now be described.

As illustrated in Figs. 6 to 11, it is preferred to first draw the opposed portions of the mouth of the wrapper outwardly so as to form an elongated folding tab indicated at 30 and in practice this may be accomplished by suitable movable blades such as 32, 33, or in any other convenient manner. At the same time the triangular top flaps 13 are folded outwardly and the side flaps 14 are folded inwardly, meeting at the center, as shown in Fig. 8, and the wrapper is folded over the upper side edges of the carton and upon the top of the carton and the triangular flaps 13 as shown in Figs. 6 and 7. The folding tab 30 is then folded centrally about a line 36 and the folded portions of the tab are then folded down upon the top of the carton as illustrated in Figs. 9 and 10, thereafter the two projecting triangular flap portions 40 of the wrapper, together with the portions of the folded tab 30 which extend beyond the carton, are folded over and adhesively affixed to the previously folded down top of the wrapper, producing a package in which the top of the package is closed in a most efficient and tight manner.

In practice it was found to be preferable to cut the triangular flaps 13 at an angle slightly greater than the natural angle formed by the folded wrapper, in order to provide clearance to permit the wrapper to be folded over more freely and thereby eliminate any tension which might rupture the wrapper when being folded over the flaps. Also the side flaps 14 are cut at a slight angle, similar to the bottom flaps, to relieve the tension at the edges thus eliminating the sharp corner effect when the triangular portions 40 are folded over.

As a modified form of the above described top closure it may be preferred to eliminate the triangular carton flaps 13 to the end that a carton with less bulk may be produced without detracting from the appearance and general utility of the carton.

In packaging various commodities, and particularly in packaging coffee, it is desirable that the package be of a construction and composed of materials such that the package may be economically manufactured and at the same time the construction should be such as to preserve the natural oils and flavors in the packaged commodity. Accordingly the metal foil of the wrapper minimizes the escape of the flavor from the commodity and in order to further assist in accomplishing this result, it is preferred to provide the interior surface of the carton with a coating or layer 48 of lacquer or other moisture and oil repellent layer to prevent absorption of oils from the commodity by the material forming the body and flaps of the carton.

While the preferred embodiment of the invention has been herein illustrated and described, it will be understood that the invention may be embodied in other forms within the scope of the following claims:

Having thus described the invention, what is claimed is:

1. As a new article of manufacture, a package comprising a carton having its bottom closed and containing a commodity, and provided at its upper end with a top flap integral with each side of the carton, a wrapping sheet adhesively affixed to the body of the carton having portions folded and secured to the bottom thereof, and a closure for the top of the carton produced by folding two opposed top flaps inwardly and the remaining top flaps outwardly to form two upstanding half sections of the wrapper, said remaining top flaps being triangular in shape, folding the half sections of the wrapper upon the inwardly folded top flaps and the outwardly folded top flaps to bring the upstanding half sections of the wrapper together whereby to form an elongated and upstanding folding tab extending across the mouth of the package and across the outwardly extending top flaps, then folding said folding tab

upon itself and down upon one of the inwardly folded top flaps and upon the outwardly projecting triangular shaped top flaps, and thereafter folding the wrapped outwardly projecting top flaps and the projecting portions of said folded tab over upon the top surface of the carton and affixing the same thereto.

2. As a new article of manufacture, a package comprising a carton having its bottom closed and containing a commodity, and provided at its upper end with a top flap integral with each side of the carton, two opposed top flaps being triangular in shape, a wrapping sheet adhesively affixed to the body of the carton having portions folded and secured to the bottom thereof, and a closure for the top of the carton produced by folding two opposed top flaps inwardly and the two triangular shaped top flaps outwardly to form two upstanding half sections of the wrapper, folding the half sections of the wrapper upon the inwardly folded top flaps and the outwardly folded top flaps to bring the upstanding half sections of the wrapper together whereby to form an elongated and upstanding folding tab extending across the mouth of the package and across the outwardly extending top flaps, then folding said folding tab upon itself and down upon one of the inwardly folded top flaps and upon the outwardly projecting triangular shaped top flaps, and thereafter folding the wrapped outwardly projecting top flaps and the projecting portions of said folded tab over upon the top surface of the carton and affixing the same thereto.

3. As a new article of manufacture, a package comprising a carton having its bottom closed and containing a commodity, and provided at its upper end with a top flap integral with each side of the carton, two opposed top flaps being triangular in shape, a wrapping sheet adhesively affixed to the body of the carton having portions folded and secured to the bottom thereof, and a closure for the top of the carton produced by folding two opposed top flaps inwardly and the two triangular shaped top flaps outwardly to form two upstanding half sections of the wrapper, folding the half sections of the wrapper upon the inwardly folded top flaps and the outwardly folded top flaps to bring the upstanding half sections of the wrapper together whereby to form an elongated and upstanding folding tab extending across the mouth of the package and across the outwardly extending top flaps, then folding said folding tab down upon one of the inwardly folded top flaps and upon the outwardly projecting triangular shaped top flaps, and thereafter folding the wrapped outwardly projecting top flaps and the projecting portions of said folded tab over upon the top surface of the carton and affixing the same thereto.

4. As a new article of manufacture, a package comprising a carton of light flexible board stock having a body portion provided with top and bottom flaps, two of the opposed top flaps being substantially triangular in shape, a commodity within the carton, the body portion of the carton having its vertical portions rounded and unscored, a wrapper for the carton adhesively affixed to the body portion and to the top flaps, and a top closure for the carton formed by folding inwardly two of the top flaps and the portions of the wrapper adhering thereto and folding outwardly the triangular top flaps and the portions of the wrapper adhering thereto to form upstanding portions, bringing together the upstanding portions of the wrapper to form an elongated folding tab extending across the top of the carton and across said outwardly extended triangular flaps, and then folding down the folding tab onto the top of the carton and folding inwardly the triangular top flaps with the portions of the wrapper adhering thereto and securing the same to the top of the carton.

STANLEY R. HOWARD.