US 20020104557A1

(19) **United States**

(12) **Patent Application Publication** (10) **Pub. No.: US 2002/0104557 A1**

Tung (43) **Pub. Date: Aug. 8, 2002**

(54) **ADJUSTING SLEEVE ASSEMBLY FOR A SUNSHADE WITH A TILTABLE CANOPY**

(76) Inventor: **Pai Tung**, Kaohsiung (TW)

Correspondence Address:
Alan Kamrath, Esquire
Rider Bennett Egan & Arundel
Suite 2000
333 South Seventh Street
Minneapolis, MN 55402 (US)

(21) Appl. No.: **09/776,224**

(22) Filed: **Feb. 2, 2001**

Publication Classification

(51) **Int. Cl.**[7] **A45B 11/00**; A45B 17/00; A45B 23/00; A45B 25/00

(52) **U.S. Cl.** **135/21**

(57) **ABSTRACT**

An adjusting sleeve assembly includes an adjusting sleeve slidably mounted around an upright support member of a sunshade and a mounting member extending outward from the adjusting sleeve and including a U-shape path therein. A pivotal block is pivotally mounted in the mounting member. A connecting rod includes a first end connected to the pivotal block to pivot therewith and a second end pivotally connected to an arcuate tube for supporting a canopy of the sunshade. A push member is slidably received in the pivotal block and includes an end for manual operation. A positioning peg includes a first end securely attached to the push member to move therewith and a second end that is urged into one of two positioning ends of the U-shape path for retaining the connecting rod in place with respect to the mounting member.

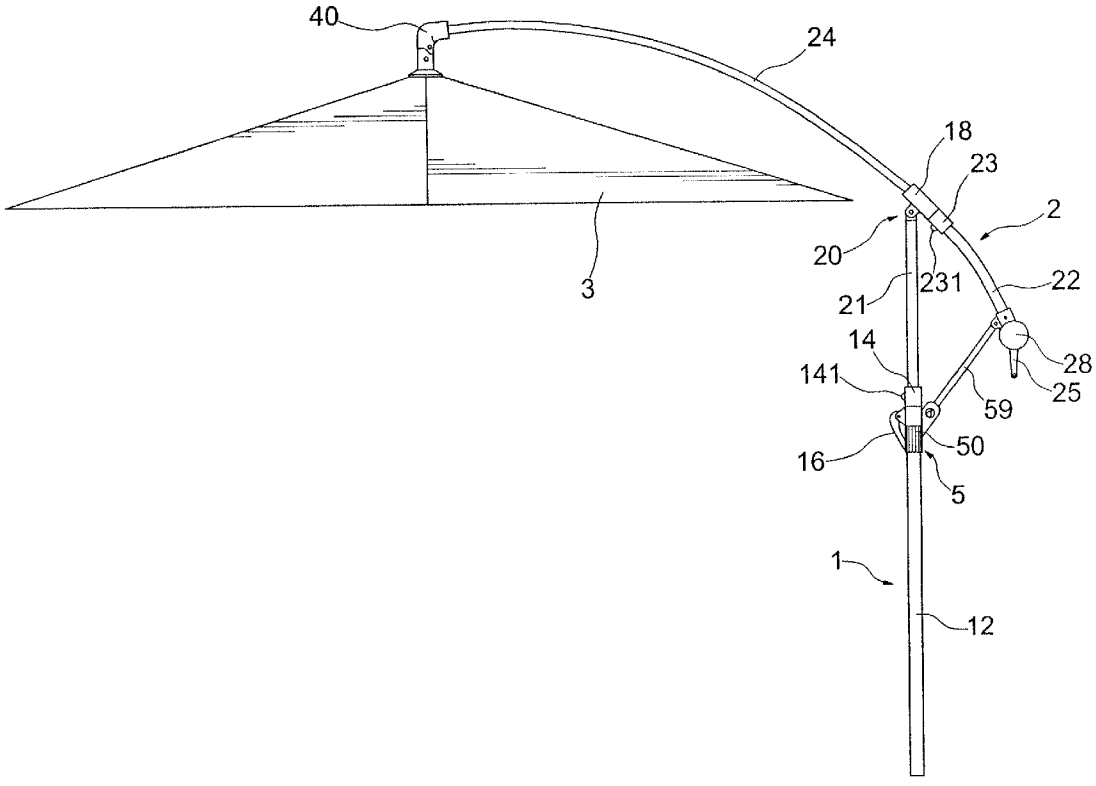

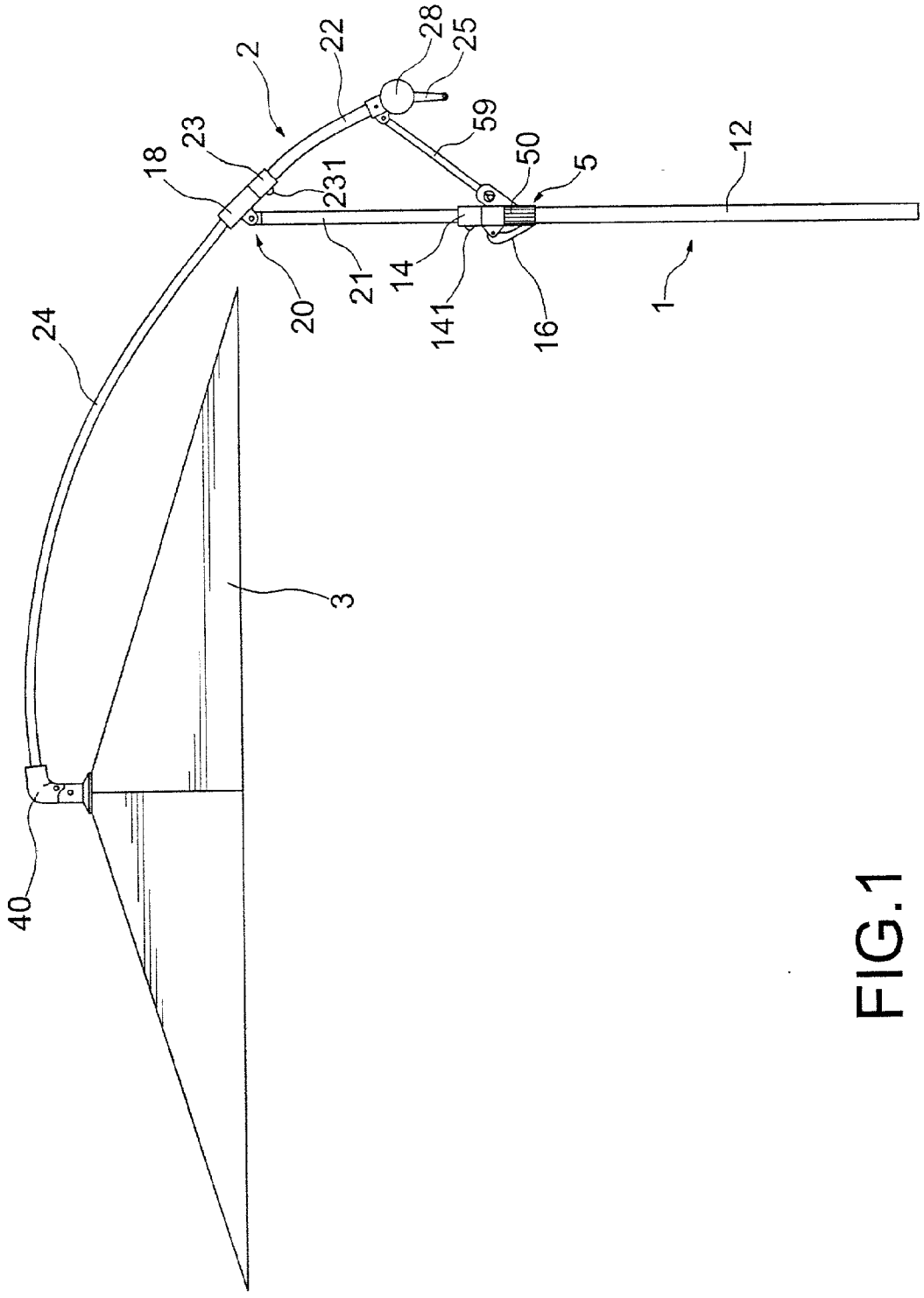

FIG.1

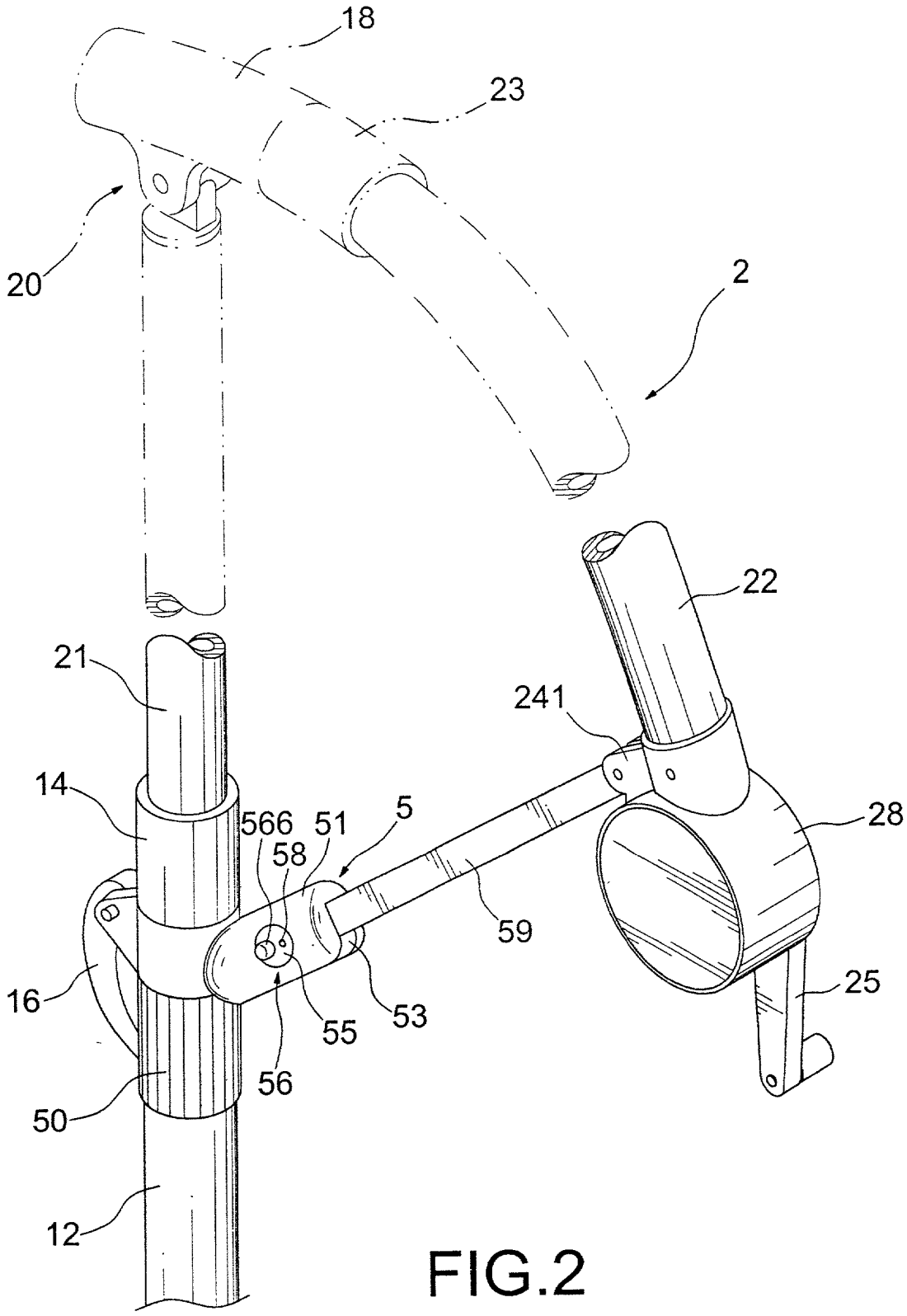

FIG.2

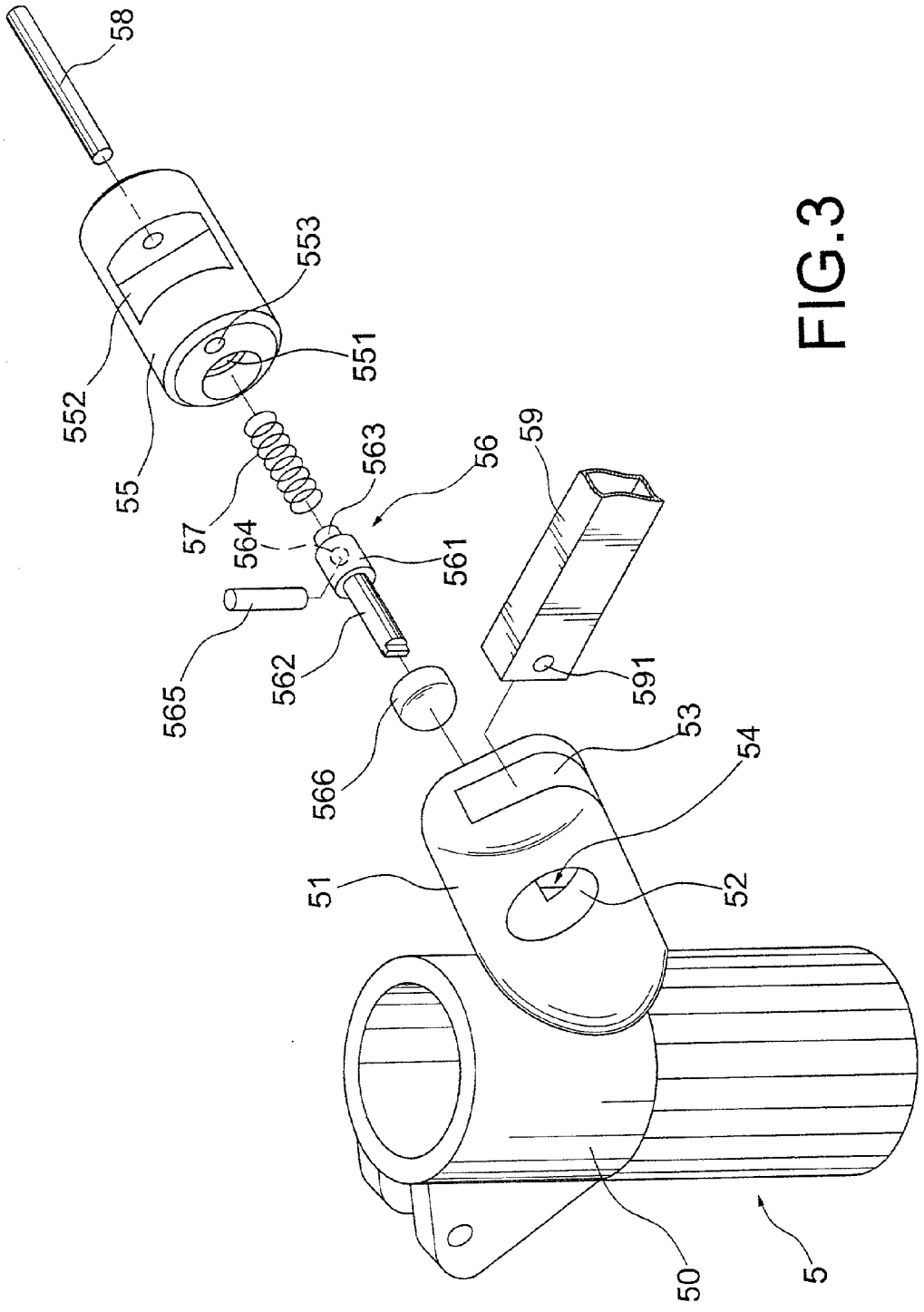
58
553
551
552
55
57
564
563
56
59
561
565
562
591
566
53
54
51
52
50
5

FIG.3

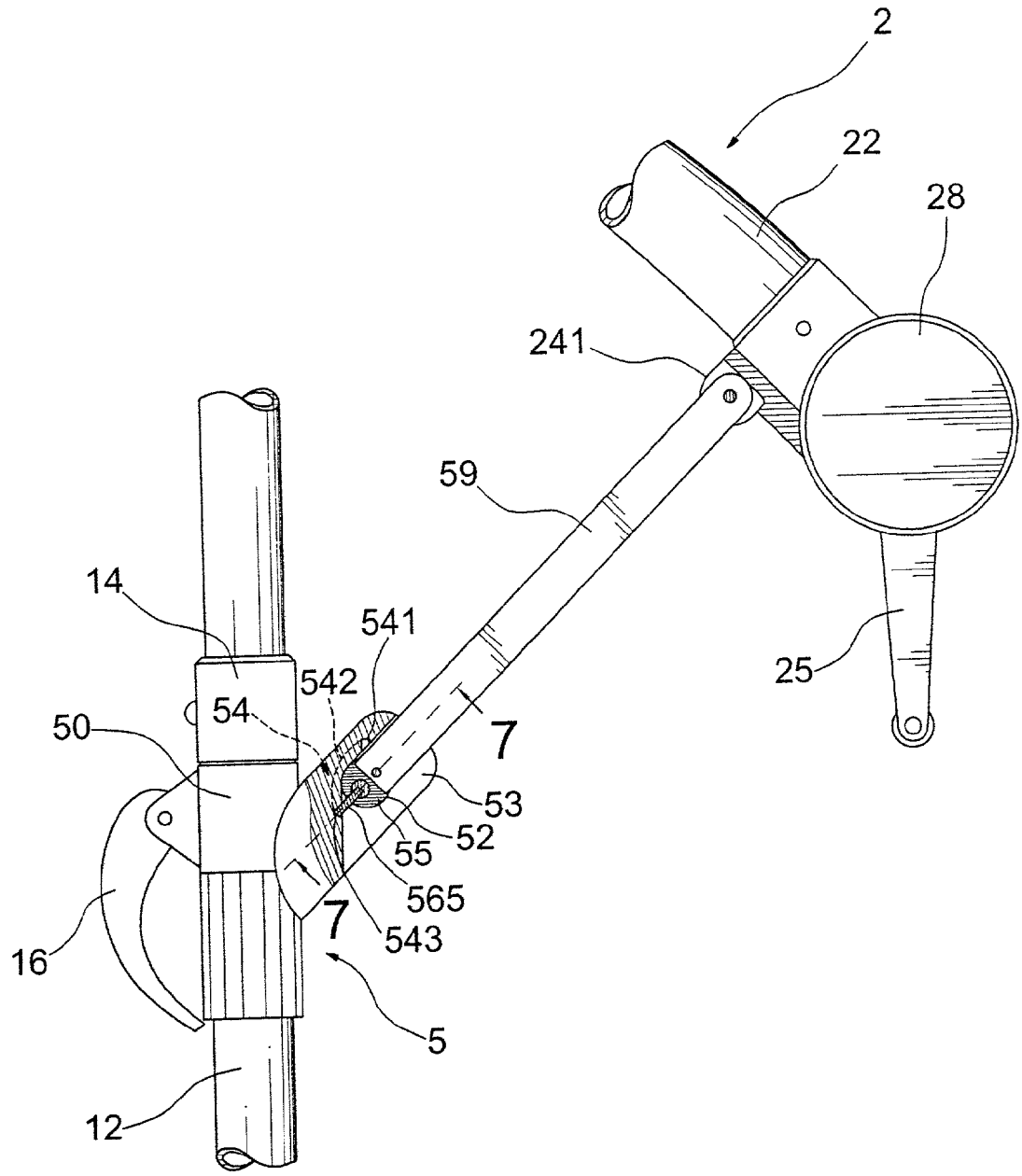

FIG.4

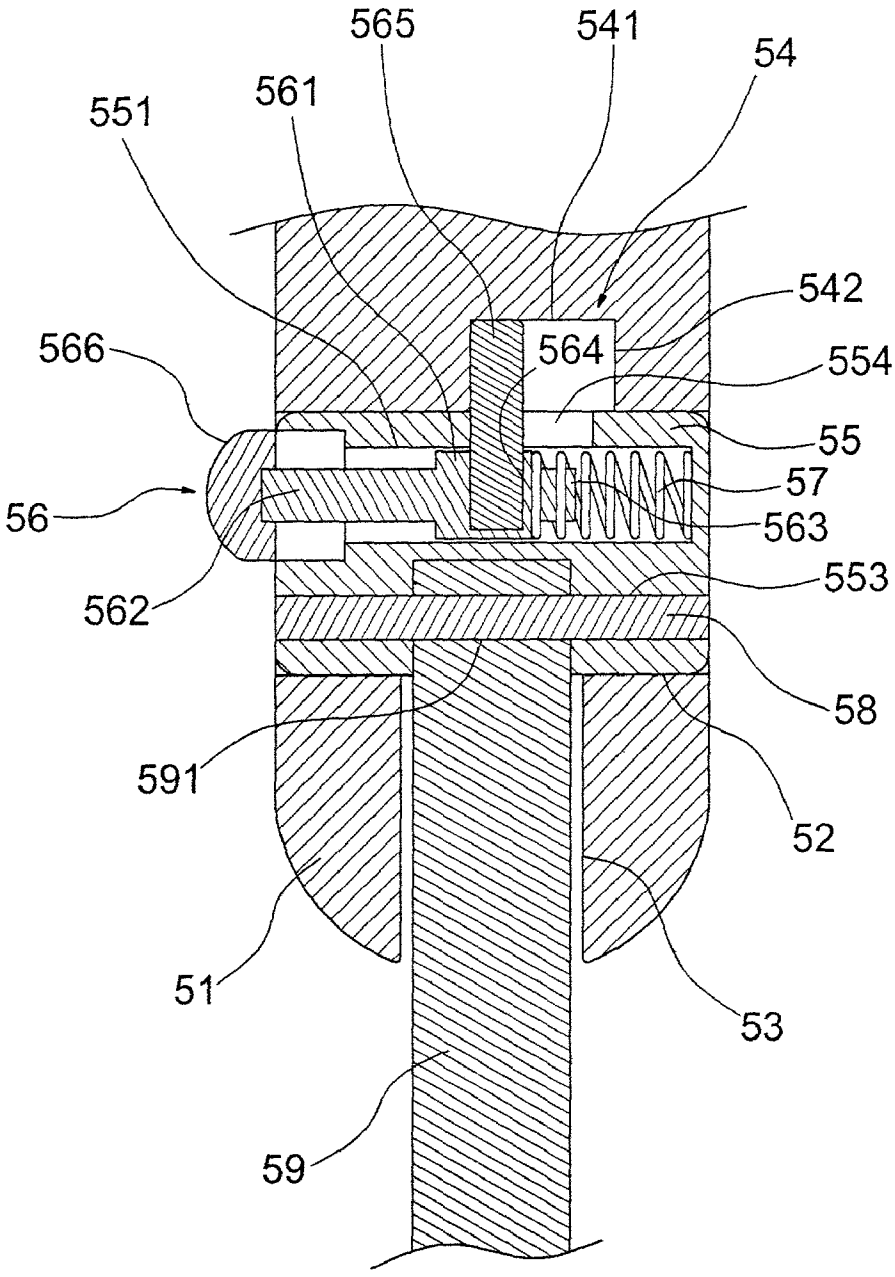
565
541
54
561
551
542
566
564
554
55
57
56
563
562
553
58
591
52
51
53
59

FIG.5

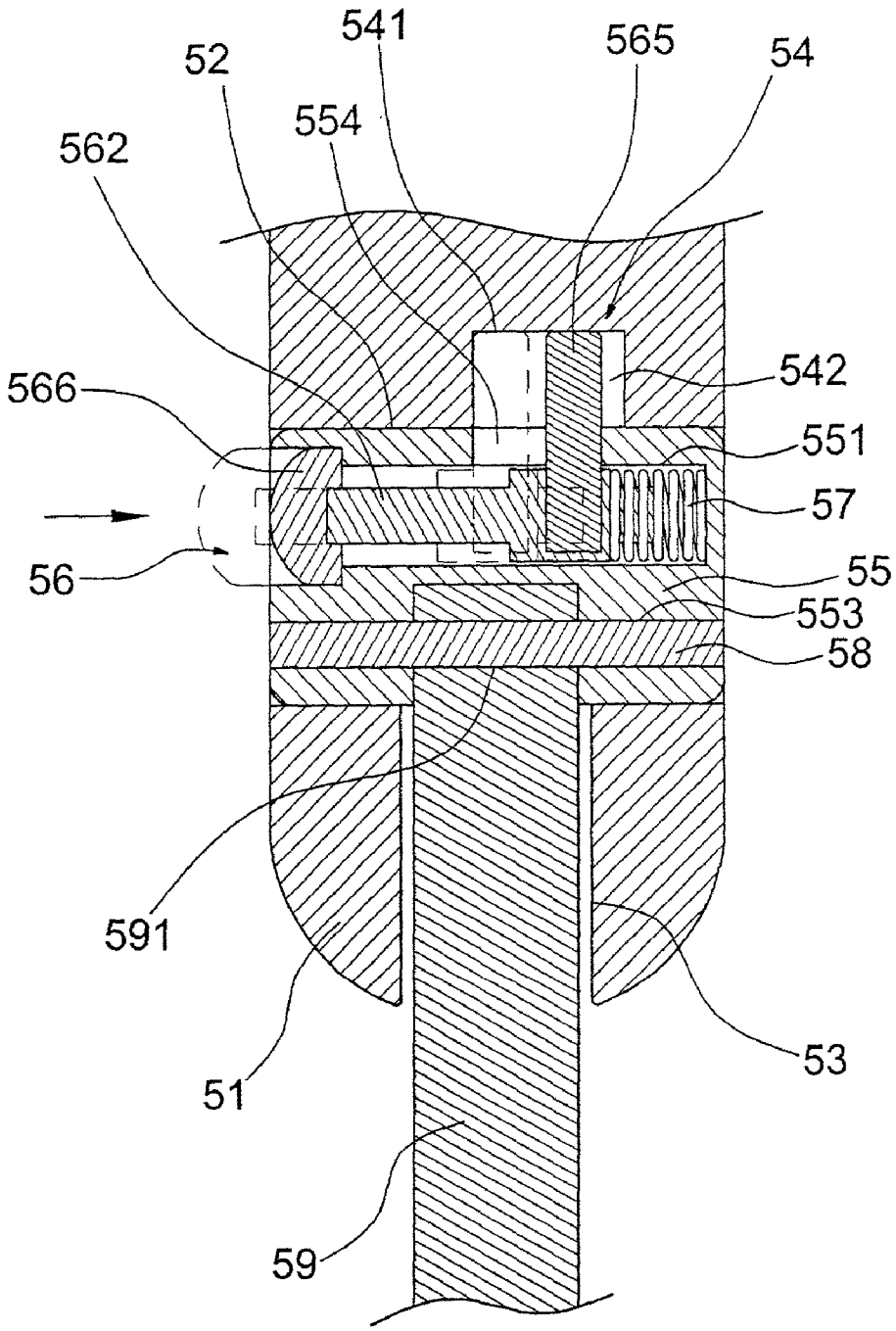

FIG.6

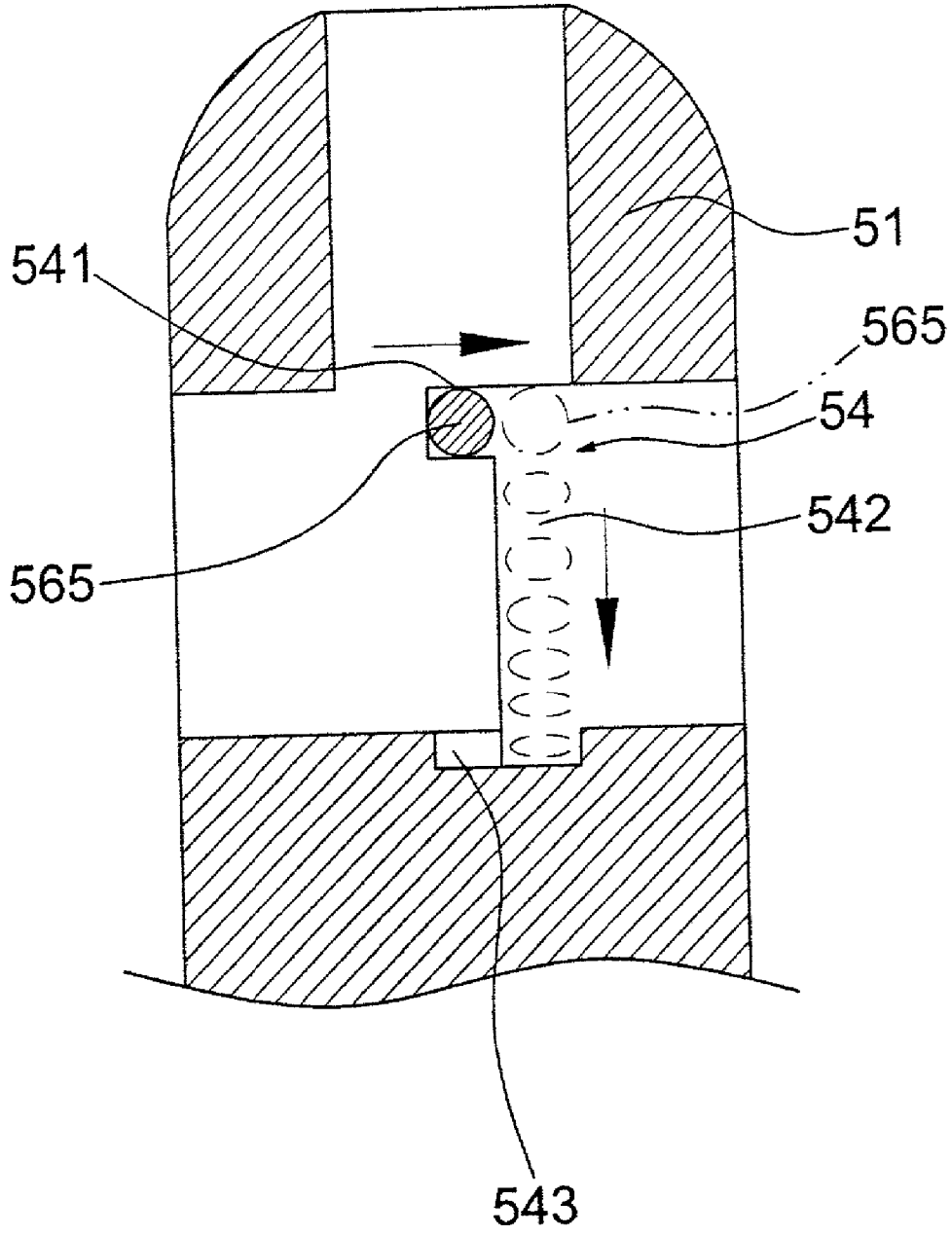

FIG.7

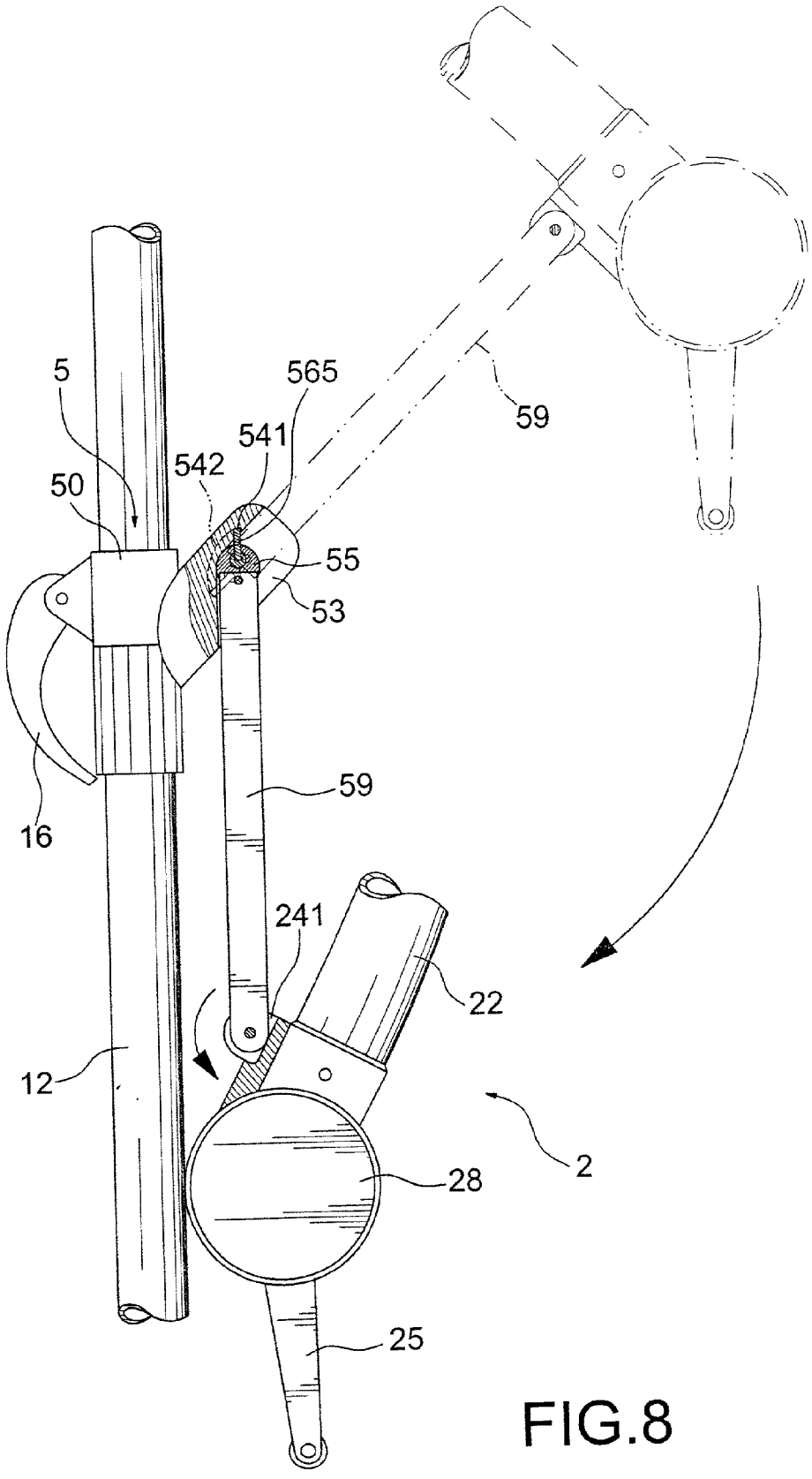

FIG.8

FIG.9

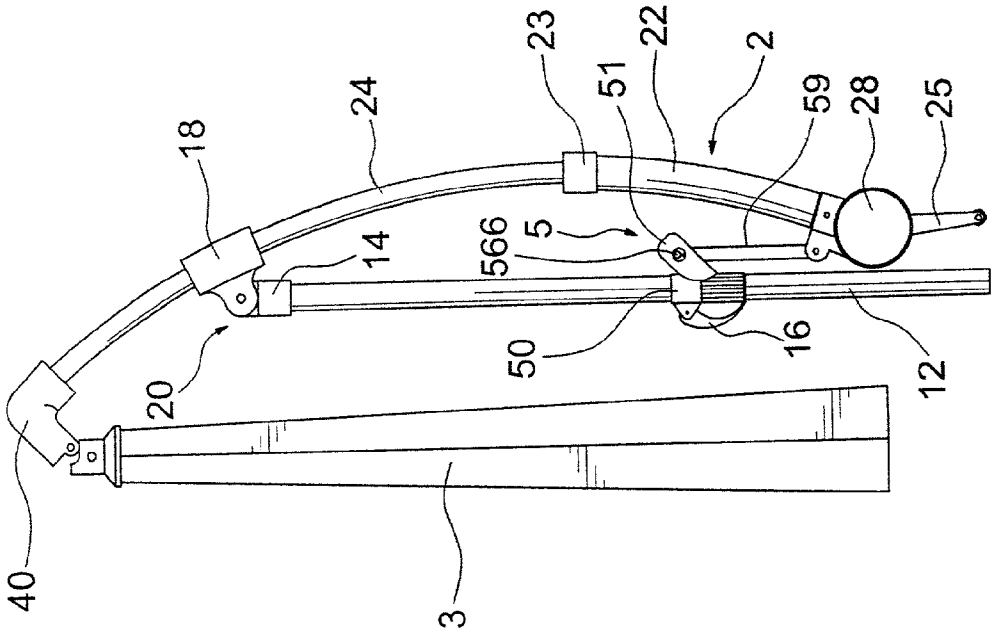

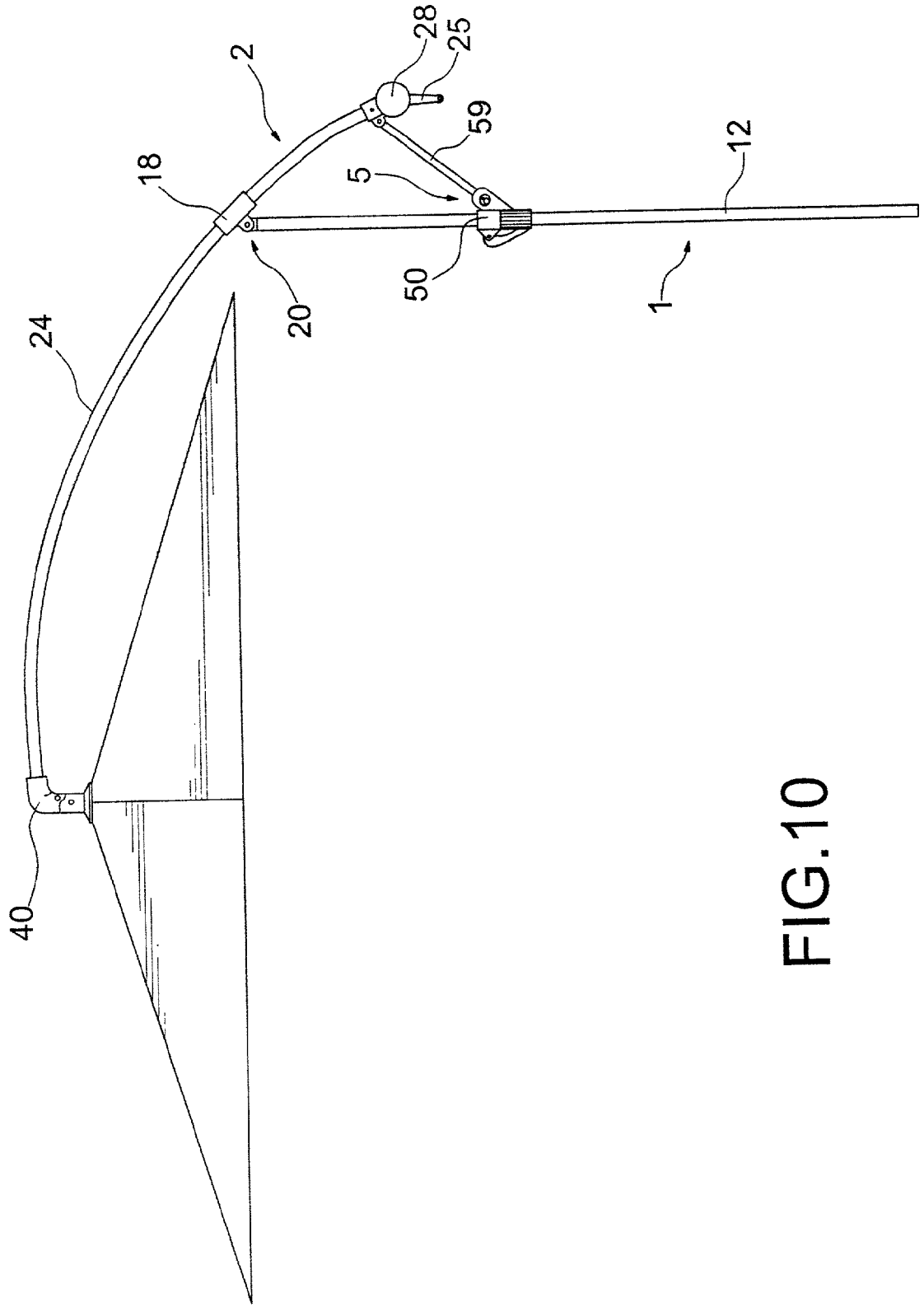

FIG.10

FIG.11

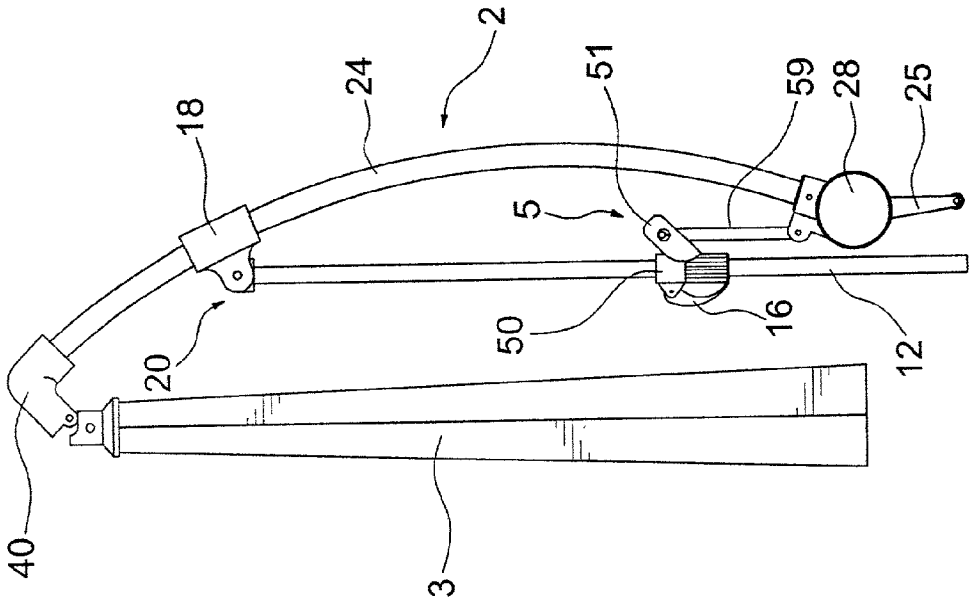

ADJUSTING SLEEVE ASSEMBLY FOR A SUNSHADE WITH A TILTABLE CANOPY

BACKGROUND OF THE INVENTION

[0001] 1. Field of the Invention

[0002] The present invention relates to an adjusting sleeve assembly for a sunshade with a tiltable canopy, and more particularly to an adjusting sleeve assembly having a connecting rod that can be retained in place during folding/unfolding of the sunshade.

[0003] 2. Description of the Related Art

[0004] U.S. Pat. No. 6,152,156 to Tung issued on Nov. 28, 2000 discloses a sunshade with a tiltable canopy. The sunshade comprises a supporting rod, a canopy support frame, and a canopy. An adjusting sleeve is slidably mounted around the supporting rod, and a lever is mounted to the adjusting sleeve for controlling sliding motion of the adjusting sleeve along the supporting rod and for frictionally retaining the adjusting sleeve in place. The canopy support frame includes an arcuate tube that has an end connected to an elbow, which, in turn, is operably connected with the canopy. The other end of the arcuate tube is connected to a reel with a handle for controlling opening/closing of the canopy. A first end of each of a pair of connecting rods is pivotally connected to an extension extending from the adjusting sleeve, and a second end of each connecting rod is pivotally connected to the other end of the arcuate rod. A positioning sleeve is slidably mounted to the connected rods. A portion of each connecting rod is releasably engaged in two grooves defined in the extension. When the connecting rods are engaged in the grooves and the positioning sleeve is moved to a position for enclosing the grooves in the extension, the connecting rods are thus retained in place, which, in turn, retains the canopy in a desired tilt angle relative to the supporting rod. When the positioning sleeve is disengaged from the extension, the connecting rods may be disengaged from the grooves in the extension, and then the connecting rods, the arcuate tube, and the collapsed canopy may be moved to a storage position. Thus, the sunshade is folded to a smaller volume for easy and convenient transport.

[0005] When unfolding the sunshade from its folded state, the user must pivot the connecting rods and the arcuate rod upward until the connecting rods are engaged in the grooves in the extension and then slide the positioning sleeve toward the extension until the grooves are enclosed, and the collapsed canopy is then opened by operating the handle on the reel. It was, however, found that the sunshade is relatively long and thus tends to flex when subjected to wing. This causes difficulty for the user to engage the positioning sleeve with the extension. In addition, one of the hands of the user that holds on the extension might even be injured by the positioning sleeve which is held by the other hand of the user. This problem is aggravated if the arcuate tube and the supporting rod of the sunshade both include two tube sections for further collapse purpose. This is because when unfolding the sunshade frame, the user has to hold a lower one of two tube sections of the arcuate tube and grasp and pull the upper tube section of the arcuate tube outward to overcome friction between the two tube sections. Nevertheless, in some cases it is difficult to grasp and pull the upper tube section of the arcuate tube by only one hand; namely, the user has to grasp and pull the upper tube section by both hands, yet the lower tube section, the connecting rods, and the adjusting sleeve are also lifted. As a result, it is impossible to unfold the sunshade in this case. Furthermore, when folding the sunshade is required, it was found that in some cases disengagement of the positioning sleeve from the extension is difficult due to over-tight engagement therebetween.

SUMMARY OF THE INVENTION

[0006] It is the primary object of the present invention to provide an improved sunshade that comprises an adjusting sleeve assembly having a connecting rod that can be retained in place during folding/unfolding of the sunshade.

[0007] A sunshade in accordance with the present invention comprises:

[0008] an upright support member having an upper end, a holding sleeve being pivotally mounted to the upper end of the upright support member;

[0009] an arcuate tube supported by and slidable relative to the holding sleeve and having a first end and a second end,

[0010] a canopy attached to the first end of the arcuate tube; and

[0011] an adjusting sleeve assembly comprising:

[0012] an adjusting sleeve slidably mounted around the upright support member;

[0013] a lever for releasably retaining the adjusting sleeve in place with respect to the upright support member;

[0014] a mounting member extending outward from the adjusting sleeve and including a slot in a distal end of the mounting member and defining a U-shape path in the mounting member, the U-shape path including two positioning ends and a passage communicating with the positioning ends;

[0015] a pivotal block pivotally mounted in the mounting member and extending along a direction transverse to an extending direction of the mounting member, the pivotal block including a longitudinal chamber and a slot defined in an outer periphery of the pivotal block and communicated with the longitudinal chamber;

[0016] a connecting rod including a first end connected to the pivotal block to pivot therewith and a second end pivotally connected to the second end of the arcuate tube;

[0017] a push member slidably received in the longitudinal chamber of the pivotal block and including an end for manual operation, a positioning peg including a first end securely attached to the push member to move therewith and a second end extending through the slot of the pivotal block and into one of the positioning ends of the U-shape path;

[0018] wherein when the second end of the push member is retained in one of the two positioning

ends, the connecting rod is retained in place with respect to the mounting member; and

[0019] wherein the second end of the push member is moved out of one of the positioning ends into the passage when the push member is pushed, and the connecting rod together with the pivotal block are pivotable relative to the mounting member to a position where the second end of the push member is urged to be engaged with the other one of the positioning ends.

[0020] The pivotal block includes a groove in the outer periphery thereof. The pivotal block further includes a longitudinal through-hole communicated with the groove. A positioning pin is extended through the longitudinal through-hole of the pivotal block and a hole in the first end of the connecting rod, thereby securely connecting the first end of the connecting rod to the pivotal block to pivot therewith.

[0021] The push member includes a first end and a second end. A push button is securely attached to the second end of the push member. An elastic element has a first end attached to the first end of the push member and a second end attached to an inner end wall defining the longitudinal chamber of the pivotal block. The push member includes a mediate portion with a transverse receptacle, and the first end of the positioning peg is securely attached to the push member to move therewith.

[0022] In an embodiment of the invention, the upright support member includes a lower support tube and an upper support tube that has a lower end telescopically received in the lower support tube. The holding sleeve is pivotally mounted to an upper end of the upper support tube. A control sleeve is provided for controlling telescopic movement of the upper support tube relative to the lower support tube. The arcuate tube includes an outer tube section and an inner tube section that has an end telescopically received in the outer tube section. The canopy is attached to another end of the inner tube section. The second end of the connecting rod is pivotally connected to the outer tube section. A further control sleeve is provided for controlling telescopic movement of the inner tube section relative to the outer tube section.

[0023] Other objects, advantages, and novel features of the invention will become more apparent from the following detailed description when taken in conjunction with the accompanying drawings.

BRIEF DESCRIPTION OF THE DRAWINGS

[0024] **FIG. 1** is a side view of a sunshade with an adjusting sleeve assembly in accordance with the present invention.

[0025] **FIG. 2** is an exploded perspective view of a portion of the sunshade and the adjusting sleeve assembly in accordance with the present invention.

[0026] **FIG. 3** is an exploded perspective view of the adjusting sleeve assembly in accordance with the present invention.

[0027] **FIG. 4** is a side view, partly sectioned, of a portion of the sunshade and the adjusting sleeve assembly in accordance with the present invention.

[0028] **FIG. 5** is a sectional view of the adjusting sleeve assembly in accordance with the present invention.

[0029] **FIG. 6** is a sectional view similar to **FIG. 5**, wherein a push button is pushed to allow pivotal movement of a connecting rod.

[0030] **FIG. 7** is a sectional view taken along line **7-7** in **FIG. 4**.

[0031] **FIG. 8** is a side view similar to **FIG. 4**, wherein the sunshade frame is in a folded state.

[0032] **FIG. 9** is a side view of the sunshade in a folded state.

[0033] **FIG. 10** is a side view illustrating application of the adjusting sleeve assembly to a sunshade of another type, wherein the sunshade is in an unfolded state.

[0034] **FIG. 11** is a side view similar to **FIG. 10**, wherein the sunshade is in a folded state.

DETAILED DESCRIPTION OF THE PREFERRED EMBODIMENT

[0035] Referring to **FIGS. 1 and 2**, a sunshade in accordance with the present invention generally includes a main frame **1**, a canopy support frame **2**, and a canopy **3**. The main frame **1** comprises an upright support member consisting of a lower support tube **12** and an upper support tube **21** that has a lower end telescopically received in the lower support tube **12**. A holding sleeve **18** is pivotally mounted to an upper end of the upper support tube **21**. A control sleeve **14** is mounted to an upper end of the lower support tube **12** and a push button **141** is provided to the control sleeve **14** in a manner that the upper support tube **12** is retained in an extended state relative to the lower support tube **12** when the push button **141** is in an extended position shown in **FIG. 1** and that the upper support tube **12** is telescopic relative to the lower support tube **12** when the push button **141** is in a retracted position inside the control sleeve **14**. Nevertheless, the lower support tube **12** and the upper support tube **21** may be integral with each other and the control sleeve **14** may be omitted, as shown in **FIG. 10**.

[0036] An adjusting sleeve assembly **5** comprises an adjusting sleeve **50** that is slidably mounted around the lower support tube **12**, and a lever **16** is mounted to the adjusting sleeve **50** for controlling sliding motion of the adjusting sleeve **50** along the lower support tube **12**. Namely, the adjusting sleeve **50** is slidable along the lower support tube **12** when the lever **16** is in a disengaging position, and the adjusting sleeve **50** is frictionally retained in place when the lever **16** is in an engaging position shown in **FIG. 1**.

[0037] The canopy support frame **2** comprises an arcuate tube consisting of an outer tube section **22** and an inner tube section **24**. A reel **28** is attached to an end of the inner tube section **22** that has a handle **25** for controlling folding/unfolding of the canopy **3**. An end of the inner tube section **24** is telescopically received in the outer tube section **22** and an elbow **40** is attached to the other end of the inner tube section **24** for supporting the canopy **3**. A control sleeve **23** is mounted to the other end of the outer tube section **22** and a push button **231** is provided to the control sleeve **23** in a manner that the inner tube section **24** is retained in an extended state relative to the outer tube section **22** when the

push button **231** is in an extended position shown in **FIG. 1** and that the inner tube section **22** is telescopic relative to the outer tube section **22** when the push button **231** is in a retracted position inside the control sleeve **23**. Nevertheless, the outer tube section **22** and the inner tube section **24** may be integral with each other and the control sleeve **23** may be omitted, as shown in **FIG. 10**. Except for the adjusting sleeve assembly, structure and operation of the sunshade with integral supporting rod **12** and integral arcuate tube **24** have been disclosed in U.S. Pat. No. 6,152,156, which is incorporated herein for reference.

[**0038**] Referring to **FIGS. 3 and 4**, the adjusting sleeve assembly **5** further includes a mounting member **51** extending upwardly and outwardly therefrom. A distal end of the mounting member **51** includes a slot **53** that opens in an end face of the distal end of the mounting member **51** and in a lower side of the mounting member **51**. In addition, as illustrated in **FIG. 7**, an inner wall defining the slot **53** includes a passage **542** and two positioning ends **541** and **543** that are communicated with the passage **542**, namely, the passage **542** and the two positioning ends **541** and **543** together define a substantially U-shape path **54** in the mounting member **51**.

[**0039**] The mounting member **51** includes a transverse through-hole **52** communicated with the slot **53**. A pivotal block **55** is pivotally received in the transverse through-hole **52** and comprises a longitudinal chamber **551**. A groove **552** is defined in an outer periphery of the pivotal block **55**, and a longitudinal through-hole **553** extends through the pivotal block **55** and communicated with the groove **552**. The pivotal block **55** further includes a slot **554** (**FIG. 5**) in an outer periphery thereof and communicated with the longitudinal chamber **551**. The slot **554** is preferably defined in the outer periphery of the pivotal block **55** at an area opposite to the groove **552**, best shown in **FIG. 5**.

[**0040**] A connecting rod **59** includes a first end with a hole **591** and a second end pivotally connected to the outer tube section **22**, as shown in **FIG. 4**. The first end of the connecting rod **59** is received in the slot **53** and inserted into the groove **552** of the pivotal block **55** that is pivotally received in the transverse through-hole **52** of the mounting member **51**. A positioning pin **58** is extended through the longitudinal through-hole **553** of the pivotal block **55** and the hole **591** of the connecting member **59**, thereby securely connecting the first end of the connecting rod **59** to the pivotal block **55** to pivot therewith.

[**0041**] As illustrated in **FIG. 5**, an elastic element **57** and a push member **56** are mounted in the longitudinal chamber **551** of the pivotal block **55**. The push member **56** is in the form of a stem having a first end **563**, a second end **562** to which a push button **566** is securely attached, and a flange **561** formed on a mediate portion thereof A transverse receptacle **564** is defined in the flange **561** for receiving an end of a positioning peg **565** that extends into one of the positioning ends **541** and **543** of the U-shape path **542** by way of the slot **554** in the pivotal block **55**. An end of the elastic element **57** is attached to the first end **563** of the push member **56** and the other end of the elastic element **57** is attached to an inner end wall of the longitudinal chamber **551**. The elastic element **57** is provided to bias the other end of the positioning peg **565** into one of the positioning ends **541** and **543** of the U-shape path **54** in the mounting member **51**.

[**0042**] The sunshade frame (excluding the canopy **3**) in **FIG. 4** is in an unfolded state. When the push button **566** is pushed inward (**FIG. 6**), the elastic element **57** is compressed and the other end of the positioning peg **565** is moved from one of the positioning ends (e.g., **541**) of the U-shape path **54** to an end of the passage **542** in the mounting member **51**, as illustrated by the phantom lines in **FIG. 7**. The user may then pivot the connecting rod **59** downward to a position shown by the solid lines in **FIG. 8**, which will move the other end of the positioning peg **565** toward the other end of the passage **542** in the mounting member **51**. The push button **566** can be released during movement of the positioning peg **565** along the passage **542**. When the other end of the positioning peg **565** reaches the other end of the passage **542**, the former is forced into the other positioning end (e.g., **543**) of the U-shape path **54** and the push button **566** is returned to its initial position shown in **FIG. 5** under the action of the elastic element **57**. Thus, as illustrated in **FIG. 8**, the connecting rod **59** is securely retained in place relative to the mounting member **51**. This allows the user to move the outer tube section **24** out of the inner tube section **22** for unfolding the sunshade without difficulty. Namely, the problems and drawbacks of the conventional design described in the background of the specification are avoided. It is appreciated that the user may push the push button **566** and pivot the connecting rod **59** from a position shown in **FIG. 8** to a position shown in **FIG. 4** to complete unfolding of the sunshade frame and then unfold the canopy **3** by means of operating the handle **25** on the reel **28**.

[**0043**] **FIG. 9** illustrates the sunshade in a completely folded state. Folding of the sunshade can be accomplished by means of the above-mentioned operation. **FIG. 10** is a side view illustrating application of the adjusting sleeve assembly to a sunshade of another type, wherein the sunshade is in an unfolded state and wherein the support tube **12** and the arcuate tube **24** are both a single member instead of telescopic design shown in **FIG. 1**. **FIG. 11** is a side view similar to **FIG. 10**, wherein the sunshade is in a folded state.

[**0044**] Although the invention has been explained in relation to its preferred embodiment, it is to be understood that many other possible modifications and variations can be made without departing from the scope of the invention as hereinafter claimed.

What is claimed is:

1. A sunshade comprising:

an upright support member having an upper end, a holding sleeve being pivotally mounted to the upper end of the upright support member;

an arcuate tube supported by and slidable relative to the holding sleeve and having a first end and a second end;

a canopy attached to the first end of the arcuate tube; and

an adjusting sleeve assembly comprising:

an adjusting sleeve slidably mounted around the upright support member;

a lever for releasably retaining the adjusting sleeve in place with respect to the upright support member;

a mounting member extending outward from the adjusting sleeve and including a slot in a distal end

of the mounting member and defining a U-shape path in the mounting member, the U-shape path including two positioning ends and a passage communicating with the positioning ends;

a pivotal block pivotally mounted in the mounting member and extending along a direction transverse to an extending direction of the mounting member, the pivotal block including a longitudinal chamber and a slot defined in an outer periphery of the pivotal block and communicated with the longitudinal chamber;

a connecting rod including a first end connected to the pivotal block to pivot therewith and a second end pivotally connected to the second end of the arcuate tube;

a push member slidably received in the longitudinal chamber of the pivotal block and including an end for manual operation, a positioning peg including a first end securely attached to the push member to move therewith and a second end extending through the slot of the pivotal block and into one of the positioning ends of the U-shape path;

wherein when the second end of the push member is retained in one of the two positioning ends, the connecting rod is retained in place with respect to the mounting member; and

wherein the second end of the push member is moved out of one of the positioning ends into the passage when the push member is pushed, and the connecting rod together with the pivotal block are pivotable relative to the mounting member to a position where the second end of the push member is urged to be engaged with the other one of the positioning ends.

2. The sunshade as claimed in claim 1, wherein the pivotal block includes a groove in the outer periphery thereof, the pivotal block further including a longitudinal through-hole communicated with the groove, the first end of the connecting rod including a hole, and a positioning pin being extended through the longitudinal through-hole of the pivotal block and the hole of the connecting rod, thereby securely connecting the first end of the connecting rod to the pivotal block to pivot therewith.

3. The sunshade as claimed in claim 1, wherein the push member includes a first end and a second end, a push button being securely attached to the second end of the push member, an elastic element having a first end attached to the first end of the push member and a second end attached to an inner end wall defining the longitudinal chamber of the pivotal block.

4. The sunshade as claimed in claim 3, wherein the push member includes a mediate portion with a transverse receptacle, the first end of the positioning peg being securely attached to the push member to move therewith.

5. The sunshade as claimed in claim 1, wherein the upright support member includes a lower support tube and an upper support tube that has a lower end telescopically received in the lower support tube, the holding sleeve being pivotally mounted to an upper end of the upper support tube, and further including a control sleeve for controlling telescopic movement of the upper support tube relative to the lower support tube.

7. The sunshade as claimed in claim **6**, wherein the arcuate tube includes an outer tube section and an inner tube section that has an end telescopically received in the outer tube section, the canopy being attached to another end of the inner tube section, the second end of the connecting rod being pivotally connected to the outer tube section, and further including a further control sleeve for controlling telescopic movement of the inner tube section relative to the outer tube section.

8. The sunshade as claimed in claim 7, wherein the pivotal block includes a groove in the outer periphery thereof, the pivotal block further including a longitudinal through-hole communicated with the groove, the first end of the connecting rod including a hole, and a positioning pin being extended through the longitudinal through-hole of the pivotal block and the hole of the connecting rod, thereby securely connecting the first end of the connecting rod to the pivotal block to pivot therewith.

9. The sunshade as claimed in claim 7, wherein the push member includes a first end and a second end, a push button being securely attached to the second end of the push member, an elastic element having a first end attached to the first end of the push member and a second end attached to an inner end wall defining the longitudinal chamber of the pivotal block.

10. The sunshade as claimed in claim 9, wherein the push member includes a mediate portion with a transverse receptacle, the first end of the positioning peg being securely attached to the push member to move therewith.

* * * * *