(12) INTERNATIONAL APPLICATION PUBLISHED UNDER THE PATENT COOPERATION TREATY (PCT)

(19) World Intellectual Property Organization
International Bureau

(43) International Publication Date
25 September 2003 (25.09.2003)

PCT

(10) International Publication Number
WO 03/079156 A2

(51) International Patent Classification[7]: G06F

(21) International Application Number: PCT/US03/07848

(22) International Filing Date: 14 March 2003 (14.03.2003)

(25) Filing Language: English

(26) Publication Language: English

(30) Priority Data:
60/363,932 14 March 2002 (14.03.2002) US

(71) Applicant: **CONTENTGUARD HOLDINGS, INC.** [US/US]; 103 Foulk Road, Suite 200-M, Wilmington, DE 19803 (US).

(72) Inventors: **LAO, Guillermo**; 5531 Lorna Street, Torrance, CA 90503 (US). **TADAYON, Bijan**; 20920 Scottsbury Drive, Germantown, MD 20876 (US). **HAM, Manuel**; 10259 Panborn Avenue, Downey, CA 90241 (US). **GILLIAM, Charles, P.**; 27 Beach Drive, Darien, CT 06820 (US). **RALEY, Michael, C.**; 12834 Verdura Avenue, Downey, CA 90242 (US).

(74) Agent: **KAUFMAN, Marc, S.**; Nixon Peabody LLP, 8180 Greensboro Drive, Suite 800, McLean, VA 22102 (US).

(81) Designated States *(national)*: AE, AG, AL, AM, AT, AU, AZ, BA, BB, BG, BR, BY, BZ, CA, CH, CN, CO, CR, CU, CZ, DE, DK, DM, DZ, EC, EE, ES, FI, GB, GD, GE, GH, GM, HR, HU, ID, IL, IN, IS, JP, KE, KG, KP, KR, KZ, LC, LK, LR, LS, LT, LU, LV, MA, MD, MG, MK, MN, MW, MX, MZ, NI, NO, NZ, OM, PH, PL, PT, RO, RU, SC, SD, SE, SG, SK, SL, TJ, TM, TN, TR, TT, TZ, UA, UG, UZ, VN, YU, ZA, ZM, ZW.

(84) Designated States *(regional)*: ARIPO patent (GH, GM, KE, LS, MW, MZ, SD, SL, SZ, TZ, UG, ZM, ZW), Eurasian patent (AM, AZ, BY, KG, KZ, MD, RU, TJ, TM), European patent (AT, BE, BG, CH, CY, CZ, DE, DK, EE, ES, FI, FR, GB, GR, HU, IE, IT, LU, MC, NL, PT, RO, SE, SI, SK, TR), OAPI patent (BF, BJ, CF, CG, CI, CM, GA, GN, GQ, GW, ML, MR, NE, SN, TD, TG).

Published:
— *without international search report and to be republished upon receipt of that report*

For two-letter codes and other abbreviations, refer to the "Guidance Notes on Codes and Abbreviations" appearing at the beginning of each regular issue of the PCT Gazette.

(54) Title: SYSTEM AND METHOD FOR GRAPHICAL RIGHTS EXPRESSIONS

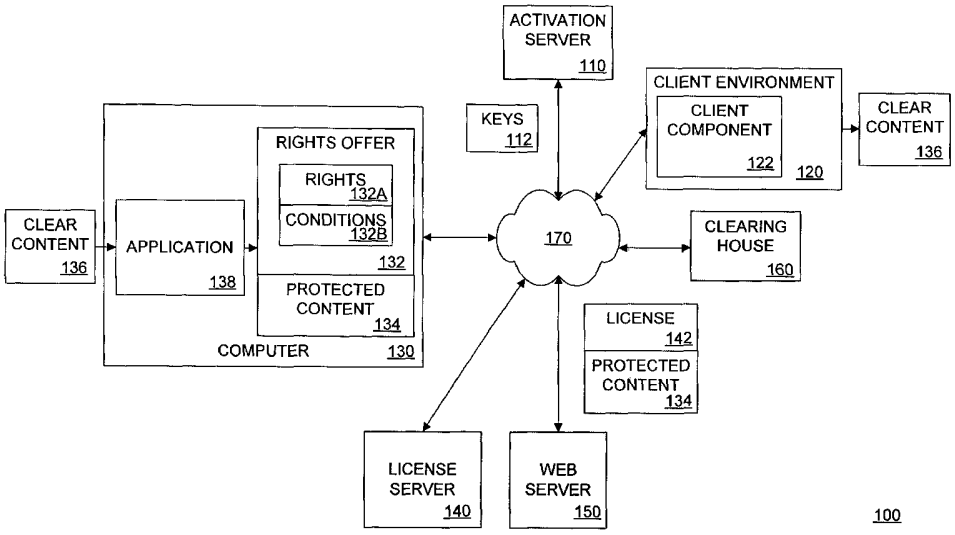

(57) Abstract: A system and method for creating a graphical representation of a rights expression for association with an item for use in a system for controlling use of the item in accordance with the rights expression. Rights expression information indicating a manner of use of an item is specified. A graphical representation of the rights expression information is then generated. The graphical representation is configured to be interpreted by an interpreter of a system for controlling use of the item to permit enforcement of the rights expression.

WO 03/079156 A2

SYSTEM AND METHOD FOR GRAPHICAL RIGHTS EXPRESSIONS

BACKGROUND OF THE INVENTION

Field of the Invention

[0001] This invention generally relates to controlling use of content, or other items, through usage rights associated with the content or other items, and more particularly to a system and method for expressing usage rights for content or other items based symbolic representations, such as graphical representations, modulated signal representations, and the like.

Description of Related Art

[0002] One of the most important issues concerning the widespread distribution of digital content, such as documents, music, movies, software, information, and the like, in forms usable by computing devices, via electronic means, and the Internet in particular, is the provision of the ability to enforce the intellectual property rights during the distribution and use of the digital content. Technologies for resolving this problem are referred to as Digital Rights Management (DRM) herein. However, there are a number of issues to be considered in effecting a DRM system, such as authentication, authorization, accounting, payment and financial clearing, rights specification, rights verification, rights enforcement, and document protection issues, to name but a few.

[0003] For example, in the world of printed documents and other physical content, a work created by an author is usually provided to a publisher, which formats and prints numerous copies of the work. The copies are then sent by a distributor to bookstores or other retail outlets, from which the copies are purchased by end users. While the low quality of copying and the high cost of distributing printed material have served as deterrents to unauthorized copying of most printed documents, it is much easier to copy, modify, and redistribute unprotected digital content with high quality. Therefore, there is a need for mechanisms to protect digital content.

[0004] Difficulties associated with preventing, or even deterring, people from making unauthorized copies of electronic content within current general-purpose computing and communications systems, such as personal computers, workstations,

and other devices connected over communications networks, such as local area networks (LANs), intranets, and the Internet, are widely recognized. Many attempts to provide hardware-based solutions to prevent unauthorized copying have proven to be unsuccessful. Moreover, the deployment of high bandwidth or broadband communications technologies and the development of what is presently known as the National Information Infrastructure (NII) is making it more convenient to distribute large documents electronically, including video files, such as full length motion pictures, and this makes it easier to proliferate unauthorized copying and distribution of digital content. Therefore, the need for further development of DRM technologies is becoming a high priority.

[0005] Accordingly, commonly-assigned U.S. Patent No. 5,634,012 discloses a DRM system for controlling the distribution of digital content, wherein devices of the DRM system can include a repository associated therewith. A predetermined set of usage transaction steps define a protocol used by the repositories for enforcing usage rights associated with the content. Usage rights persist with the content and the usage rights associated with the content comprise a digital work. The usage rights can permit various manners of use of the content, such as a right to view or print or display the content, a right to use the content only once, a right to distribute or redistribute the content, and the like. Such usage rights can be made contingent on payment or other conditions. However, there is still a further need for systems and methods for expressing and enforcing usage rights and/or conditions associated with content in a flexible and robust manner.

SUMMARY OF THE INVENTION

[0006] The above and other needs are addressed by embodiments of the present invention, which provide an improved system and method for expressing usage rights for content or other items based on modulated or varied signals or graphical representations of the usage rights.

Accordingly, in one aspect, the invention is a method for creating a rights expression for association with an item for use in a system for controlling use of the item in accordance with the rights expression. The method comprises specifying rights expression information indicating a manner of use of an item and generating a

graphical representation of the rights expression information. The graphical representation is configured to be interpreted by an interpreter of a system for controlling use of said item to permit enforcement of said rights expression based on said rights expression information.

In another aspect, there is provided a system for creating a rights expression for association with an item for use in a system for controlling use of the item in accordance with the rights expression. The system comprises means for specifying rights expression information indicating a manner of use of an item and means for generating a graphical representation of the rights expression information. The graphical representation is configured to be interpreted by an interpreter of a system for controlling use of the item to permit enforcement of the rights expression based on the rights expression information.

In another aspect, there is a rights expression comprising rights expression information indicating a manner of use of an item and a graphical representation of said rights expression information. The graphical representation is configured to be interpreted by an interpreter of a system for controlling use of the item to permit enforcement of the rights expression based on the rights expression information.

[0007] Still other aspects, features, and advantages of the present invention are readily apparent from the following detailed description, simply by illustrating a number of exemplary embodiments and implementations, including the best mode contemplated for carrying out the present invention. The present invention is also capable of other and different embodiments, and its several details can be modified in various respects, all without departing from the spirit and scope of the present invention. Accordingly, the drawings and descriptions are to be regarded as illustrative in nature, and not as restrictive.

BRIEF DESCRIPTION OF THE DRAWINGS

[0008] The present invention is illustrated by way of example, and not by way of limitation, in the figures of the accompanying drawings and in which like reference numerals refer to similar elements and in which:

[0009] FIG. 1 is a schematic illustration of an exemplary Digital Rights Management system on which various embodiments of the present invention can be implemented;

[0010] FIG. 2 illustrates a set of 8 symbols, derived from a circle, that can be used for expressing rights expressions;

[0011] FIG. 3 illustrates a set of 4 symbols, derived from a rectangle, that can be used for expressing rights expressions;

[0012] FIG. 4-6 illustrate sets of 8 symbols, derived from circular structures, that can be used for expressing rights expressions;

[0013] FIG. 7-8 illustrate sets of 8 symbols, derived from the 4 sides and 2 diagonals of square structures, that can be used for expressing rights expressions;

[0014] FIG. 9 illustrates a set of 4 symbols, derived from the 2 sides and 2 diagonals of a square structure, that can be used for expressing rights expressions;

[0015] FIG. 10 illustrates a set of 4 symbols, derived from the 4 corners of a square structure, that can be used for expressing rights expressions;

[0016] FIG. 11 illustrates a set of 8 symbols, derived from the 4 sides and 2 diagonals of a square structure, that can be used for expressing rights expressions;

[0017] FIG. 12 illustrates a set of 8 symbols, derived from a circular structure, that can be used for expressing rights expressions;

[0018] FIG. 13 illustrates a set of 5 symbols, using one square and 4 different orientations of a triangle rotated at 0, 90, 180, and 270 degrees, that can be used for expressing rights expressions;

[0019] FIG. 14 illustrates a set of 4 symbols, derived from a circular structure, that can be used for expressing rights expressions;

[0020] FIG. 15 illustrates a set of 12 symbols, derived from a star shape structure, in three different colors, Red (R), Green (G), and Blue (B), that can be used for expressing rights expressions;

[0021] FIG. 16 illustrates an exemplary embodiment for combining the symbols shown in FIG. 15;

[0022] FIG. 17 illustrates an exemplary message, read from left to right, for expressing rights expressions using the 4 symbols of the set shown in FIG. 10;

[0023] FIG. 18 illustrates an exemplary rights expression for indicating an expiration date for access to an e-book using the symbols of the set shown in FIG. 15;

[0024] FIGs. 19-20 illustrate exemplary rights expressions for performing an action using the symbols of the set shown in FIG. 15;

[0025] FIG. 21 illustrates an exemplary rights expression for the right to print 100 copies of 2 e-books with identification numbers 443 and 12 using the symbols of the set shown in FIG. 15;

[0026] FIG. 22 illustrates an exemplary rights expression for the right to listen to music, such as playing or rendering the music, for 100 minutes for 2 pieces of music with identification numbers 443 and 13 using the symbols of the set shown in FIG. 15;

[0027] FIG. 23 illustrates an exemplary rights expression for an e-book data record for an e-book with identification number 143, whose owner has an IDENTIFICATION number 212, using the symbols of the set shown in FIG. 15;

[0028] FIG. 24 illustrates an exemplary rights expression, wherein the same sets of symbols can have different meanings in different situations, contexts, applications, or industries, and can be custom-made for each application or industry using the symbols of the set shown in FIG. 15; and

[0029] FIGs. 25-26 are exemplary flowcharts for illustrating the operation of the exemplary embodiments for expressing usage rights for content or other items based on modulated signals or graphical representations of the usage rights.

DETAILED DESCRIPTION OF THE INVENTION

[0030] A system and method for expressing usage rights for content or other items based on modulated signals or graphical representations of the usage rights are described. In the following description, for purposes of explanation, numerous specific details are set forth in order to provide a thorough understanding of the present invention. It is apparent to one skilled in the art, however, that the present invention can be practiced without these specific details or with equivalent arrangements. In some instances, well-known structures and devices are shown in block diagram form in order to avoid unnecessarily obscuring the present invention.

[0031] As noted above, authentication, authorization, accounting, payment and financial clearing, rights specification, rights verification, rights enforcement, and document protection issues should be addressed by a Digital Rights Management system. Commonly-assigned U.S. Patents No. 5,530,235, No. 5,629,980, No. 5,634,012, No. 5,638,443, No. 5,715,403, No. 6,233,684, and No. 6,236,971, the entire disclosures of all of which are hereby incorporated by reference herein, disclose DRM systems addressing these and other issues.

[0032] In addition, systems and methods have been developed for symbolic representation of information. For example, the name of a book, the price of a book, a street address, and the like, can be represented in terms of one dimensional or two dimensional bar codes, patterns, glyphs, alphabets, or other symbols, which can be machine-readable, human-readable, or both. Commonly-assigned U.S. Patents No. 5,091,966, No. 5,128,525, No. 5,168,147, No. 5,221,833, No. 5,245,165, No. 5,444,779, No. 5,449,895, No. 5,449,896, No. 5,453,605, No. 5,521,372, No. 5,576,532, No. 5,684,885, No. 5,864,127, No. 6,000,613, No. 6,076,738, No. 6,182,901, and No. 6,208,771, the entire disclosures of all of which are hereby incorporated by reference herein, are directed to various types of glyphs and/or uses thereof.

[0033] For example, U.S. Patents No. 6,208,771 teaches method and apparatus for robust decoding of glyph address carpets, No. 6,076,738 teaches self-clocking glyph shape codes, No. 5,684,885 teaches binary glyph codes based on color relationships, No. 5,864,127 teaches analog glyph detector and detector arrays, No. 5,576,532 teaches interleaved and interlaced sync codes and address codes for self-clocking glyph codes, No. 6,000,613 teaches self-clocking glyph code having composite glyphs for distributive encoding of multi-bit digital values, No. 6,182,901 teaches orientational disambiguation for self-clocking glyph codes, No. 5,521,372 teaches framing codes for robust synchronization and addressing of self-clocking glyph codes, No. 5,453,605 teaches global addressability for self-clocking glyph codes, No. 5,449,896 teaches random access techniques for use with self-clocking glyph codes, No. 5,449,895 teaches explicit synchronization for self-clocking glyph codes, No. 5,221,833 teaches methods and means for reducing bit error rates in reading self-clocking glyph codes, No. 5,444,779 teaches electronic copyright royalty accounting

system using glyphs, No. 5,245,165 teaches self-clocking glyph code for robustly encoding dual bit digital values, No. 5,128,525 teaches convolution filtering for decoding self-clocking glyph shape codes, No. 5,168,147 teaches binary image processing for decoding self-clocking glyph shape codes, and No. 5,091,966 teaches adaptively scaling for decoding spatially periodic self-clocking glyph shape codes.

[0034] The exemplary embodiments described herein, advantageously, leverage symbolic representations with rights expressions to express rights information related to items, such as digital content, services, abstract objects, resources, goods, and the like. In addition, the symbolic representations can be used to convey information, such as rights expression information, information about a grammar or language dealing with usage rights, information about access to information, and the like. The use of a rights expression, for example, in the form of a license, and the like, can be used to define usage rights for specifying a permitted manner of use of an item, such as access to digital content, and the like. Such usage rights can be associated with one or more conditions, such as payment, and the like, that can be a prerequisite for exercising the specified manner of use of the item. A rights expression language, such as eXtensible Rights Markup Language (XrML), and the like, for example, including predefined syntax and semantics, can be employed to express the usage rights.

[0035] According to exemplary embodiments, rights expression information corresponding to usage rights associated with content can be expressed via a graphical representation of the rights expression information. In further exemplary embodiments, the graphical representation can include glyphs, machine and human-readable symbols, and other types of symbols to express the rights expression information. In still further exemplary embodiments, the rights expression information can be expressed via a modulated signal, such as modulated light and sound signals, and the like. Advantageously, the exemplary embodiments combine symbolic representations with rights expressions for conveying information about usage rights, conditions, access related to digital content, services, abstract objects, items, resources, and the like, in a flexible and robust manner.

[0036] Referring now to the drawings, wherein like reference numerals designate identical or corresponding parts throughout the several views, and more particularly to

FIG. 1 thereof, there is illustrated a DRM system 100 that can be used in connection with the described exemplary embodiments to specify and enforce usage rights for content, services, or other property. In FIG. 1, the DRM system 100 includes a user activation component in the form of an activation server 110 that issues a set of public and private key pairs 112 to a content user in a protected fashion. Typically, when the user uses the DRM system 100 for the first time, the user installs software that, for example, works with, or includes, a rendering application for a particular content format.

[0037] The software is installed in a client environment 120, for example, such as a computing device associated with the user. The software can be part of the DRM system 100 and can be used to access protected content 134. After the installation, the software can be activated. During the activation process, some information is exchanged between the activation server 110 and the client environment 120. A client software component 122 can be downloaded and installed in the client environment 120. The client software component 122 can be tamper resistant and can include the set of public and private key pairs 112 issued by the activation server 110, as well as other components.

[0038] A rights offer 132 can be associated with the protected content 134 and can specify usage rights 132A that are available to an end-user, for example, when one or more corresponding conditions 132B are satisfied. A license server 140 manages the encryption keys 112 and issues a license 142 for the protected content 134. The license 142 can embody the actual granting of the usage rights 132A to the end user. For example, the rights offer 132 may grant the end user the right to view the protected content 134 on the condition of payment of a fee of five dollars, and the right to print the protected content on the condition of payment of a fee of ten dollars. The license 142 can be issued for the view right when the five dollar fee has been paid and/or for the print right when 10 dollar fee has been paid. The client component 122 interprets and enforces the rights that have been specified in the license 142.

[0039] Clear content 136, such as unprotected content, and the like, can be prepared, for example, with an application 138, such as a document preparation application, installed on a computer 130 associated with a content publisher, a content distributor, a content service provider, or any other suitable party. Preparation of the

clear content 136 can include specifying the usage rights 132A and the conditions 132B under which the clear content 136 can be used, associating the rights offer 132 with the clear content 136, and protecting the clear content 136 with, for example, a cryptography algorithm to generate the protected content 134. A rights language, such as XrML, eXtensible Access Control Markup Language (XACML), Open Digital Rights Language (ODRL), and the like, can be used to specify the rights offer 132. However, the rights offer 132 can be specified in any suitable manner. Note the phrase "specifying rights information", as used herein, refers to creating, deriving, or other wise utilizing information that relates to rights expressions. Also, the rights offer 132 can be in the form of a pre-defined specification , profile, template, and the like, that can be associated with the protected content 134. Accordingly, the process of specifying the rights offer 132 can include any suitable process for associating rights, conditions, and the like, with content. The rights offer 132 associated with the protected content 134 and the encryption key 112 used to encrypt the clear content 136 can be transmitted to the license server 140.

[0040] A typical workflow for the DRM system 100 can include a user operating within the client environment 120 being activated for receiving the protected content 134 by the activation server 110. The activation process results in the public and private key pair 112, and, for example, some user and/or machine-specific information, and the like, being downloaded to the client environment 120 in the form of the client software component 122. The activation process can be accomplished, for example, at any suitable time prior to the issuing of the license 142.

[0041] When the user wishes to use the protected content 134, the user makes a request for the protected content 134. For example, the user might browse a Web site running on a Web server 150, using a browser installed in the client environment 120, and attempt to download the protected content 134. During this process, the user may go through a series of steps possibly including a fee transaction, such as in the sale of content, other transactions, such as collection of information, and the like. When the appropriate conditions and other prerequisites, such as the collection of a fee and verification that the user has been activated, are satisfied, the Web server 150 contacts the license server 140, for example, through a secure communications channel, such as a channel using a Secure Sockets Layer (SSL). The license server 140 then

generates the license 142 for the protected content 134 and the Web server 150 downloads both the protected content 134 and the license 142. The license 142 can include the appropriate usage rights of the usage rights 132A and can be downloaded from the license server 140 or an associated device. The protected content 134 can be downloaded from the computer 130 associated with a publisher, distributor, or other party. The rights offer 132 can be persistent and remain associated with the protected content 134.

[0042] The client software component 122 in the client environment 120 can then proceed to interpret the license 142 and allow use of the protected content 134 based on the rights 132A and the conditions 132B specified in the license 142. The interpretation and enforcement of the usage rights, for example, are further described in commonly-assigned U.S. Patents No. 5,530,235, No. 5,629,980, No. 5,634,012, No. 5,638,443, No. 5,715,403, No. 6,233,684, and No. 6,236,971. The above steps can take place sequentially, approximately simultaneously, in various orders, and the like.

[0043] The DRM system 100 addresses security aspects of protecting the protected content 134. In particular, the DRM system 100 can authenticate the license 142 that has been issued by the license server 140. One way to accomplish such authentication is for the client software component 122 to determine if the licenses 142 can be trusted. In other words, the client software component 122 can include the capability to verify and/or validate the cryptographic signature, or other identifying characteristic of the license 142. During the activation step described above, the client environment 120 and the license server 140 can receive the set of keys 112, for example, in a tamper-resistant software package that can include other components, such as the client software component 122 for the activated client environment 120 to verify the signature of the license 142.

[0044] The DRM system 100 is of an exemplary nature and can be implemented in numerous other equivalent arrangements. For example, the license 142 and the protected content 134 can be distributed from different entities. As another example, the rights offer 132 can be associated with the protected content 134 by a party other than the party preparing the protected content 134. As a further example, a clearinghouse 160 can be used to process payment transactions and verify payment

prior to issuing the license 142. Moreover, the various processes and transactions can be performed, for example, via online and/or offline environments and/or combinations thereof. For example, an end user could download content to a computer and then transfer the content from the computer to a personal digital assistant (PDA). The end user could then buy a license for the content, for example, via a supermarket kiosk, a cash register, a prep-paid license card, and the like, and then transfer the license to the PDA. The end user could then activate the content for use on the PDA and/or the computer. In such an offline scenario, the various devices can, but need not, communicate directly with one another and information can be exchanged in any suitable manner, such as by physically moving media between the devices.

[0045] The devices and subsystems of the DRM system 100 of FIG. 1 can communicate, for example, over a communications network 170, and can include, for example, any suitable servers, workstations, personal computers (PCs), laptop computers, PDAs, Internet appliances, set top boxes, modems, handheld devices, telephones, cellular telephones, wireless devices, other devices, and the like, capable of performing the processes of the disclosed exemplary embodiments. The devices and subsystems of the DRM system 100, for example, can communicate with each other using any suitable protocol and can be implemented using a general purpose computer system. One or more interface mechanisms can be used in the DRM system 100 including, for example, Internet access, telecommunications in any suitable form, such as voice, modem, and the like, wireless communications media, and the like. Accordingly, communications network 170 can include, for example, wireless communications networks, cellular communications networks, satellite communications networks, Public Switched Telephone Networks (PSTNs), Packet Data Networks (PDNs), the Internet, intranets, hybrid communications networks, combinations thereof, and the like. In addition, the communications network 170 can be the same or different networks.

[0046] As noted above, it is to be understood that the DRM system 100 of FIG. 1 is for exemplary purposes, as many variations of the specific hardware used to implement the disclosed exemplary embodiments are possible. For example, the functionality of the devices and the subsystems of the DRM system 100 can be

implemented via one or more programmed computer systems or devices. To implement such variations as well as other variations, a single computer system can be programmed to perform the special purpose functions of one or more of the devices and subsystems of the DRM system 100. On the other hand, two or more programmed computer systems or devices can be substituted for any one of the devices and subsystems of the DRM system 100. Accordingly, principles and advantages of distributed processing, such as redundancy, replication, and the like, also can be implemented, as desired, for example, to increase the robustness and performance of the DRM system 100.

[0047] The exemplary embodiments of the present invention directed to symbolic representations for expressing rights information, such as the rights offer 132, using graphical representations, such as glyph symbols, and the like, will now be described. The exemplary glyphs shown in FIGs. 2-24 can be generated in visible form, such as printed form, in digital form, such as electronic form, and the like. For security or other purposes, for example, background and foreground symbols can be employed. For example, background symbols can be configured to have no meaning to a human and can be employed for security purposes, such as to confuse possible hackers, while foreground symbols, which can be separated or distinguished from the background symbols based on predetermined patterns, placements, markers, codes, combination of pointers, and the like, can be configured and employed to express the rights expression information. Also, random or semi-random noise, and the like, can be employed in the symbols, for example, to provide further security functions or other functions.

[0048] In addition, both the background and foreground symbols can have meaning to a human or machine, wherein the meaning of the background symbols can be used to interpret the meaning of the foreground symbols. Further, the DRM system 100 can be configured to interpret a first symbol if a second symbol is present in a predetermined manner, such as being printed on the same substrate as the first symbol, being printed at a certain physical location relative to the first symbol, and the like.

[0049] For example, according to an exemplary embodiment, a graphical representation of a rights expression can include a background portion and a

foreground portion. The background portion, for example, can be configured to have no meaning, unless a predetermined condition is satisfied, such as the day being Wednesday, and the like. As another example, the foreground portion can be configured to specify that "if you are scanning this item and its after July 4, 2003, then also look at the background portion for additional information, otherwise continue to disregard the background portion." Accordingly, various relationships between the background portion and the foreground portion can be specified with an appropriate rights expression, for example, using the graphical and other forms of the symbolic representations of the exemplary embodiments described herein.

[0050] The symbols of exemplary embodiments also can be employed to convey redundant information. For example, in the case of a paper ticket that is susceptible to being partially damaged, a corresponding reader can still be able to read the damaged ticket to extract the rights expression information based on redundant information that can be conveyed by the symbols. Such redundancy can be accomplished by overlapping or duplicating the information of some or all of the symbols to improve the accuracy of the ticket reader. In addition, the symbols can include a check-sum, error correction codes, and the like, for example, for verification and security purposes, to ensure that inconsistencies with the interpreted rights expression information can be resolved, and the like. The exemplary embodiments also are applicable for the rights expression information including digital information, such as electronic information, and the like. For example, the exemplary embodiments can be used in cases where digital media, including the rights expression information, is damaged, where it is desired to have multiple ways to obtain a digital symbol, and the like.

[0051] The symbols of the exemplary embodiments, for example, can be hidden as a non-obvious pattern, shape, and the like, in another image, pattern, and the like, which then can be detected by a suitable system, machine, device, and the like, having predetermined parameters and having predetermined knowledge about the parameters of the hidden information. In further exemplary embodiments, the symbols can be part of a watermark in another image. Other technologies, for example, special ink, such as heat sensitive ink, magnetic ink, invisible ink, ink visible under certain angles,

different chemical conditions, different illumination, and the like, also can be employed for symbol generation, watermarking purposes, and the like.

[0052] In the exemplary embodiments, the symbols can convey information, for example, about licenses, grammar, rights expressions, rights assignments, payments, meta-data, content owners, histories regarding the content, the state of the content, encryption keys, expiration dates, digital signatures, conditions, constraints, parameters of a self-protecting document, digital works, content, digital content, resources, objects, and the like, that are available for end users to render, consume, use, distribute, and the like.

[0053] In addition, the symbol patterns of the exemplary embodiments can be used to convey information about an action, a command, a function, a procedure, a module, a subroutine, executable code, and the like. For example, the extracted information can instruct the transfer of funds to a specific account, for example, via the clearing house 160, can instruct the transfer of an e-book to a specific address, can place a limit on distribution or transfers of content, for example, the protected content 134, can add constraints for users of content, can destroy an encryption key, for example, the public/private key pairs 112, after a predetermined number of times of usage of content, can stop or discontinue access to content, can transmit information about a content owner, can transmit information about content, can transmit information about a trademark owner, can transmit information about a copyright owner, can transmit information for adding up royalties and/or micro-payments, can instruct the sending of an e-mail back to a content owner about the status of content distribution, can be used combine or attach different sections, pieces, or chapters of content from different locations to produce a multimedia book or newsletter, and the like. Such information can be recorded, updated, and the like, back onto the original content, recorded on the copies made of the original content, and the like. The exemplary embodiments can be employed in copy machines, cameras, video recorders, CD-writers, recording devices, duplication devices, replication devices, computing devices, rendering devices, and the like.

[0054] As previously noted, the exemplary embodiments can employ spatially periodic self-clocking glyph shape codes, for example, as described in commonly-assigned U.S. Patent No. 5,091,966, wherein decoding based on convolution filtering

and morphological operations, such as erosion, dilation, opening, and closing operations, and the like, can be employed. Advantageously, such exemplary embodiments can tolerate a significant amount of image distortion and degrading high frequency noise.

[0055] The exemplary embodiments also can reduce bit error rates in reading self-clocking glyph codes, for example, as described in commonly-assigned U.S. Patent No. 5,221,833, wherein a value assigned to a given glyph can be set to be different in just one bit position from values assigned to glyphs with which the given glyph is most likely to be confused.

[0056] To have robust decoding and less error rate, the exemplary embodiments can include glyphs that have a plurality of independently modulatable and readily distinguishable characteristics, such as substantially orthogonal characteristics, and the like, with appropriate design of symbol cells, such as an array of pixel positions with the corresponding pixel values for each glyph. Spatial synchronization and orientation determination, for example, for decoding purposes, can be achieved by markers or patterns, to reduce the propagation of errors. For example, the exemplary embodiments can employ interleaved codes, interlaced codes, and the like, that can be encoded to facilitate the partitioning and correlation of data embedded within such glyph codes, for example, as described in commonly-assigned U.S. Patent No. 5,576,532. The exemplary embodiments also can employ composite glyphs and glyphs with different colors or shades, as further described herein.

[0057] Accordingly, FIG. 2 illustrates a set 200 of 8 symbols 201-208, derived from a circle, that can be used for expressing rights expressions. FIG. 3 illustrates a set 300 of 4 symbols 301-304, derived from a rectangle, that can be used for expressing rights expressions. FIG. 4 illustrates a set 400 of 8 symbols 401-408, derived from a circular structure, that can be used for expressing rights expressions. FIG. 5 illustrates a set 500 of 8 symbols 501-508, derived from a circular structure, that can be used for expressing rights expressions. FIG. 6 illustrates a set 600 of 8 symbols 601-608, derived from a circular structure, that can be used for expressing rights expressions. FIG. 7 illustrates a set 700 of 8 symbols 701-708, derived from the 4 sides and 2 diagonals of a square structure, that can be used for expressing rights expressions. FIG. 8 illustrates a set 800 of 8 symbols 801-808, derived from the 4

sides and 2 diagonals of a square structure, that can be used for expressing rights expressions. FIG. 9 illustrates a set 900 of 4 symbols 901-904, derived from the 2 sides and 2 diagonals of a square structure, that can be used for expressing rights expressions. FIG. 10 illustrates a set 1000 of 4 symbols 1001-1004, derived from the 4 corners of a square structure, that can be used for expressing rights expressions. FIG. 11 illustrates a set 1100 of 8 symbols 1101-1108, derived from the 4 sides and 2 diagonals of a square structure, that can be used for expressing rights expressions. FIG. 12 illustrates a set 1200 of 8 symbols 1201-1208, derived from a circular structure, that can be used for expressing rights expressions. FIG. 13 illustrates a set 1300 of 5 symbols 1301-1305, using one square and 4 different orientations of a triangle rotated at 0, 90, 180, and 270 degrees, that can be used for expressing rights expressions. FIG. 14 illustrates a set 1400 of 4 symbols 1401-1404, derived from a star shape structure, that can be used for expressing rights expressions.

[0058] FIG. 15 illustrates a set 1500 of symbols, derived from the star shape structure of FIG. 14, that can be used for expressing rights expressions. In FIG. 15, each of the symbols 1401-1404 can be taken from the Red, Green, and Blue (RGB) color space. Thus, each of the 4 symbols 1401-1404 of the star shape of FIG. 14 can include the Red (R), Green (G), and/or Blue (B) colors. Accordingly, in a basic case, wherein no colors are combined, 12 symbols can be generated (for example, four symbols times three colors). To increase the number of members or symbols, however, complex symbols derived from the set 1500 of FIG. 15 and having overlapping colors can be generated, as shown in FIG. 16.

[0059] In FIG. 16, two or more symbols of different colors (for example, up to all 12 symbols) can be combined so as to overlap on a physical location, to potentially produce part or all of a star shape, in different colors, or combination of colors for each part of the star shape. For example, in FIG. 16, the color of the resulting horizontal symbol 1401 can be based on the combination of Green and Red symbols 1401, the color of vertical symbol 1402 can be Green, and the color of the diagonal symbol 1403 can be Blue. The described combination can be used to represent a complex symbol 1601, as shown in FIG. 16. Thus, a new set of complex symbols with many more choices for symbols than the set 1400 from FIG. 14, can be defined, as illustrated by FIG. 16. Accordingly, the number of complex symbols in the new

set, as illustrated by FIG. 16, can be $(2^{12}-1)$ or 4095 symbols, assuming that a blank space is not considered a symbol. With more choices for complex symbols provided, as in the exemplary embodiment of FIG. 16, advantageously, correspondingly more complex and comprehensive symbolic representations for grammar, language, and the like, for the rights expressions can be generated.

[0060] In further exemplary embodiments, other color spaces, such as the Yellow, Magenta, and Cyan (YMC) color space, and the like, can be employed. Typically, the Yellow, Magenta, Cyan, and Black (YMCK) color space cannot be employed, because the information in the K component would overlap with information in combination of the YMC components, such that the contribution of K component would not be easily distinguished from that of the combination. This could result in confusion during the decoding process, because not a single and clear one-to-one relationship and interpretation may be determined.

[0061] To detect the colors in the generated symbols, sensors, detectors, and the like, can be used with relatively very high accuracy. For the complex symbols, such as the symbol 1601 of FIG. 16, angle detection can be made practically independent of color detection. Thus, errors in the angle detection can be made independent of errors in the color detection, and visa versa, advantageously, reducing error propagation, reducing the overall error rate for decoding and recognition of generated complex symbols or messages generated from the complex symbols, and the like.

[0062] An exemplary embodiment for increasing the number of members of a set is illustrated by way of example in FIG. 17. In FIG. 17, a message that can be read from left to right, having N words, and using the 4 symbols 1001-1004 of the set 1000 shown in FIG. 10 is illustrated. In this example, every 3 symbols, starting and reading from left to right, represent a word, wherein the symbols represent the letters in a word, and each word includes 3 letters. As shown in FIG. 17, for example, the first word includes a sequence of symbols 1002, 1004, and 1001, the second word includes a sequence of symbols 1003, 1003, and 1004, the Nth word includes a sequence of symbols 1001, 1002, and 1003, and the like. Thus, a set of words can be defined, wherein the number of words in the set is 4^3 or 64 (for example, four symbols with three symbols per word), assuming that a blank space is not used in a word.

[0063] If a physical-level error occurs, such as a extra line drawn on a part of the symbol, a line deleted from a part of the symbol, and the like, then one word or symbol can be confused with another one. This is more problematic for words with long length, such as words defined with a length of 100 symbols (for example, each word including 100 symbols in series). In such cases, more markers for position, rotation, orientation, synchronization, and the like, can be employed. In addition, parity codes, check-sum codes, error checking or correction schemes, and the like, can be employed to help to reduce the error rate. Furthermore, some of the members of the set can be set aside, and not be used at all, for the sake of better recognition of the symbols or words, more certainty in recognition, less confusion, and the like.

[0064] The exemplary embodiments of, for example, FIGs. 16 and 17 can be combined to further increase the number of members in a resulting set. In addition, grammar, rules, and the like, can be added between the words defined in FIG. 17 to even further increase the number of members in the resulting set. For example, grammar, rules, and the like, can be used to specify relationships between words, order of words, meaning in the context, exceptions, and the like. General rules, such as English grammar rules, computer language rules, algorithmic rules, grammars, such as Pascal, eXtensible Markup Language (XML), FOR-loop structures, and the like, also can be employed.

[0065] The resulting relative large set of complex symbols or words can be used, for example, to map, represent, abbreviate, symbolize, to correspond to different complete messages, partial messages, English phrases, words, letters, partial words, compression tables, dictionaries in English or other languages, other symbols, other glyphs, other letters, other languages, logical expressions, computer commands, executables, pieces of code, other human readable languages or symbols, voices, sounds, voice recognition commands, instructions, rules, numbers, grammar, parameters of rights assignment or granting or controlling access to items, conditions, fees, dates, information about items or an owner of an item, to request for specific actions and doing those actions, such as transfer of fund or items, erasure of content, disabling or preventing access to items, with tables, databases, formulas, curves, translation schemes, predefined or dynamic mapping relationships, such non-static

and variable mapping relationships, mapping relationships depending on context, situation, or other parameters, and the like.

[0066] For example, FIG. 18 illustrates an exemplary rights expression for indicating an expiration date for access to an e-book using the symbols of the set 1500 shown in FIG. 15. In FIG. 18, for example, a book identification (ID) number in a database is 245, which, for example, refers to a novel by a given author, and an access expiration date is July 12, 2003. Accordingly, the first complex symbol can be used to express the phrase "Book (or resource) ID number," the second complex symbol can be used to express the integer "245," the third complex symbol can be used to express the phrase "Access/expiration date," the fourth complex symbol can be used to express day and month of the year ("July 12," or 7-12), and the fifth complex symbol can be used to express the year "2003."

[0067] In a similar manner, any suitable expression, grammar, rule, and the like, can be expressed based on the glyphs and/or the complex symbols of the exemplary embodiments, advantageously, to enable rights management, rights assignment, and the like. Additional exemplary expressions and/or grammar for rights assignment and management, such as for the XrML language, grammar, expressions, statements, licenses, rights assignment, and the like, that can be expressed using the described exemplary embodiments, for example, are further described in commonly-assigned U.S. Patents No. 5,715,403, No. 5,629,980, No. 6,236,971, No. 6,233,684, No. 5,634,012, No. 5,638,443, and No. 5,530,235.

[0068] FIG. 19 illustrates an exemplary rights expression for performing an action expressed using the symbols 1401-1404 of the set 1500 shown in FIG. 15. For example, in FIG. 19, the action can be the sending of funds, 55 US Dollars, to account number 435 at a bank with ID number 212, and the like. According to an exemplary embodiment, the expressed action can include any suitable type of action and can be complex in structure, for example, having hierarchical, logical, conditional, and the like, statements within its structure.

[0069] FIG. 20 illustrates an exemplary rights expression for performing an action using the symbols 1401-1404 of the set 1500 shown in FIG. 15. For example, in FIG. 20, the action can be the erasing of an e-book file with the ID number 125. According to an exemplary embodiment, the expressed action can include rights management

actions, editing actions, combining actions, actions for transferring items, objects, or resources, and the like.

[0070] FIG. 21 illustrates an exemplary rights expression for expressing the right to print 100 copies of 2 e-books with ID numbers 443 and 12 using the symbols 1401-1404 of the set 1500 shown in FIG. 15. As shown in FIG. 21, logical phrases, such as AND, OR, exclusive OR (XOR), and the like, can be employed within an exemplary rights expression. According to an exemplary embodiment, the glyphs employed can include their own internal logic, rules, grammar, structure, options, ordering, and the like.

[0071] FIG. 22 illustrates an exemplary rights expression for expressing the right to listen to music, play music, render music, and the like, for 100 minutes, for 2 pieces of music with ID numbers 443 and 13, using the symbols 1401-1404 of the set 1500 shown in FIG. 15. For example, in FIG. 22, the music ID numbers are listed in series, one after the other, and the end of the list of ID numbers is flagged, indicated, and the like, by an glyph referred to as an "End of List of ID Nos." According to an exemplary embodiment, an expressed list can be extensive, include many layers within each other, such as directories, and the like.

[0072] FIG. 23 illustrates an exemplary rights expression for expressing an e-book data record for an e-book with ID number 143, whose owner has an ID number 212, using the symbols 1401-1404 of the set 1500 shown in FIG. 15. For example, in FIG. 23, the end of the record is indicated, flagged, and the like, by a glyph referred to as "End of Data." According to an exemplary embodiment, an expressed record can include additional information about the book, content owner, and the like, such as how to send payment to a content owner, and the like. In addition, the size of an expressed record can be of any suitable size, and the expressed record can be hierarchical, including its own directories, and the like.

[0073] FIG. 24 illustrates an exemplary rights expression, wherein the same sets of symbols can have different meanings in different situations, contexts, applications, industries, can be custom-made for each application or industry, and the like, using the symbols 1401-4104 of the set 1500 shown in FIG. 15. For example, in FIG. 24, a glyph can be used to express what application the rights expression is intended for, such as e-books, movies, music, video, multimedia, and the like. The next glyph can

be used to express the units employed for a given type of content, such a "Pages" for e-books, minutes for music and movies, Bytes for data, tracks for music, and the like. The next glyph can be used to express a range for the units, such as the range of pages of an e-book, and the like. The next two glyphs can be used to express the "Start" and "End" units for the ranges, such as 5 and 10, for expressing a range of "between pages 5 and 10," in the case of an e-book, "between minutes 5 and 10," in the case of a music file, and the like According to an exemplary embodiment, any suitable information also can be added, such as to indicate the name or the ID of an e-book, or content owner, information relevant to rights assignment or rights management, and the like. Thus, the glyphs of the exemplary embodiments can have flexible interpretations, can have multiple meanings, can depend on a context or application, and the like.

[0074] In an exemplary embodiment, the symbols, sets of symbols, and the like, of the exemplary embodiments, for example, as described with respect to FIG. 2-24, can be correlated, associated, and the like, with corresponding information, such as rights expressions or portions thereof, and the like, for example, based on information that can be stored in one or more memories, such as a hard disk, optical disk, magneto-optical disk, RAM, and the like, of the devices and sub-systems of DRM system 100. One or more databases of the devices and subsystems of the DRM system 100 can store such information. The databases can be organized using data structures, such as records, tables, arrays, fields, graphs, trees, lists, and the like, included in one or more memories, such as the memories listed herein, and the like.

[0075] In an exemplary embodiment, one or more glyphs can be employed so as to carry a secondary message, hidden message, and the like. For example, in the case of airport security, such a glyph can be embedded on a passenger's ticket, in the case of library security, such a glyph can be embedded on a student's library card, and the like. In the exemplary airport security embodiment, for example, in response to the passenger, an identified terrorist, presenting a ticket employing such a glyph, a silent alarm can be triggered to notify authorities to react to the situation in a manner that is not apparent to the terrorist. Accordingly, the exemplary embodiments can be employed to express various actions that can be initiated via a ticket, some of which

may not be apparent to the ticket holder, advantageously, making it easier for authorities, and the like, to react to and/or control a given situation.

[0076] In an exemplary embodiment, the glyphs of the exemplary embodiments can be displayed in three dimensions, on paper, on a computer display, and the like, for example, using holographic technology, and the like. In an exemplary embodiment, the glyphs of the exemplary embodiments can be secretly designed, such that it would be hard to replicate, or fake the glyphs, layers of security can be added, such as by employing watermarking, authentication, check-sum, and the like, schemes. In an exemplary embodiment, the state, history, and the like, of a system, such as the DRM system 100, content, and the like, can be encoded using the glyphs of the exemplary embodiments.

[0077] In an exemplary embodiment, the glyphs of the exemplary embodiments need not be printed nor be capable of being seen by a human eye, as long as the glyphs of the exemplary embodiments can be machine read, for example, using a suitable device, such as a scanner, wand, bar code reader, and the like. In a further exemplary embodiment, the glyphs or symbols of the exemplary embodiments need not be in forms that can be "seen" by a machine. For example, the glyphs or symbols of the exemplary embodiments can be configured to be detected in some other way, such as being "heard," and the like.

[0078] In an exemplary embodiment, the glyphs, symbols, words, messages, and the like, of the exemplary embodiments used to convey information, for example, can be encoded using light, sound, a series of sounds, light pulses, and the like, using at any suitable frequency, amplitude, and the like, can include ultraviolet waves, x-rays, microwaves, radio waves, and the like, can employ lasers, modulated or convoluted information, different colors or wavelengths, electric or magnetic field variations, and the like. Any suitable series of the glyphs, symbols, words, messages, and the like, of the exemplary embodiments employed can have its own grammar, rules, and the like, which provide a meaning to a transmitted message. For example, a sound or light in a range of frequencies that a human ear or eye cannot detect, can be employed for transmitting the glyphs, symbols, words, messages, and the like, of the exemplary embodiments, during security applications, privacy applications, and the like. In this way, a transmitted message can be made transparent to a user or users, but at the same

can be retrieved, understood, and the like, by a suitable sensor, detector, and the like. In an exemplary embodiment, the glyphs, symbols, words, messages, and the like, of the exemplary embodiments can be expressed using any suitable human or machine sensing organ or device, and the like, so long as that the sensed information, message, and the like, can be quantized, digitized, expressed, and the like, based on numbers, bits, bytes, and the like.

[0079] For example, a device, such as a touch tone telephone, and the like, can be used to transmit a sequence of sounds corresponding to the glyphs, symbols, words, messages, and the like, of the exemplary embodiments, over a communications medium, such as a telephone line, and the like. The specific sounds, including their sequence, duration, other factors, and the like, can be employed the represent the symbolic expression expressed by the glyphs, symbols, words, messages, and the like, of the exemplary embodiments. Using this exemplary embodiment, an application can be used to enable a customer to engage in, for example, an online transaction that has the same effect as an application using the Internet for the online transaction, except that such a transaction can be sound based.

[0080] According to an exemplary embodiment, rights expression information can be reduced to a series of numbers using various techniques. For example, an unambiguous canonical rights expression can be converted into a binary format. In an exemplary embodiment, such a binary format can be expressed as a sound, a series of sounds, and the like, and based on the glyphs, symbols, words, messages, and the like, of the exemplary embodiments.

[0081] In a further exemplary embodiment, a rights expression template, profile, and the like, can be expressed using a sound, series of sounds, based on the glyphs, symbols, words, messages, and the like, of the exemplary embodiments. For example, an exemplary rights expression, in the form of a license granting the right to a specified manner use (for example, playing) of content (for example, an identified song) on an identified device, and the like, can be expressed, as follows:

```
<license>
    <grant>
        <cm:device cmid="123"/>
        <cx:play/>
```

```
            <cm:song cmid="456"/>
        </grant>
        <cm:issuerDevice>
            <cm:device cmid="024"/>
        </cm:issuerDevice>
</license>
```

[0082] Then, according to an exemplary embodiment, the corresponding template, profile, and the like, for example, wherein variables in the license are removed, can be generated, as follows:

```
<license>
        <grant>
            <cm:device cmid=""/>
            <cx:play/>
            <cm:song cmid=""/>
        </grant>
        <cm:issuerDevice>
            <cm:device cmid=""/>
        </cm:issuerDevice>
</license>
```

[0083] Thus, such a rights expression template, profile, and the like, advantageously, can be expressed using a sound, series of sounds, based on the glyphs, symbols, words, messages, and the like, of the exemplary embodiments. In a similar manner, according to a further exemplary embodiment, light, a series of light pulses, and the like, at any suitable frequencies, including ultraviolet waves, x-rays, microwaves, radio waves, and the like, can be employed to express information, and, for example, based on the glyphs, symbols, words, messages, and the like, of the exemplary embodiments.

[0084] The exemplary embodiments, thus, can be used to express information, such as rights expressions, and the like, based on the glyphs, symbols, words, messages, and the like, of the exemplary embodiments. For example, any suitable rights expressions can be translated into the noted formats, and can be machine processed. Advantageously, the exemplary embodiments can provide increased efficiency, better matching of a resources to a target computational environment, such as matching a technology to a device employed, and the like.

[0085] For example, according to an exemplary embodiment, a user wishes to display on a personal computer screen a copy of the "Complete Works of William Shakespeare," which the user has already obtained, and which resides in the hard drive of the personal computer of the user. In an exemplary embodiment, the user can engage in an online transaction through the Internet, for example, visiting a corresponding Internet site, using the computer keyboard to provide certain information for representing a request for access to the work and the rights the user wishes to acquire, providing a credit card number to pay for the transaction, and downloading from the Internet site a digital license associated with the work authorizing the user the right to render the work by displaying the work on the personal computer screen. A computer program running on the personal computer can be used to interpret the license, and upon successful interpretation the user can be permitted to render the work.

[0086] According to an exemplary embodiment, the above example can be accomplished by transmitting a series of sounds. In this exemplary embodiment, the Internet site can transmit sound tones, which can be interpreted by a personal computer, other device, such as a mobile telephone, and the like, as corresponding a license granting the right to render the work. A touch-tone telephone system can be employed and configured to transmit and recognize the sound tones. Other devices can be employed and configured to transmit over a communications device other sounds, for example, with fine nuisances that are difficult to replicate, for example, for security purposes, and the like.

[0087] According to an exemplary embodiment, a symbol in the form of a sound signal, a light signal, and the like, can be transmitted and used, for example, during at checkout at an online store, and the like, to denote that an item, such as an e-book, music file, movie, and the like, is paid for and can be unlocked so as to function. Alternatively, the absence of such transmission can be used to prevent the item from being used.

[0088] According to an exemplary embodiment, tones, frequencies, sequences of sounds or light, as noted above, and the like, as representations of symbols can be broadcast as a signal to initiate an action, series of actions, and the like. For example, an owner of digital content, such as a company, can broadcast a sound throughout a

building, which can cause devices in the building to initiate transactions, such as to lock down electronic files, because a computer system has been determined to be compromised, and the like. In this example, a device, such as a personal computer, and the like, can be offline, but can respond to the broadcast signal, for example, via a suitable device, and the like, capable of receiving the broadcasted signal. In an exemplary embodiment, the broadcasted signal representation can be a command revoking or suspending licenses previously acquired authorizing devices to permit rendering or transfer of electronic files, digital works or content, specific digital works or content, and the like.

[0089] According to the exemplary embodiments, the glyphs, symbols, words, messages, and the like, of the exemplary embodiments, can be in printed or in visible form, such as in the case of a paper ticket with a glyph printed thereon, and the like. According to a further exemplary embodiment, the ticket, the glyphs, symbols, words, messages, and the like, of the exemplary embodiments, can be in a digital form, such as an electronic form, and the like.

[0090] Employing digital representations of a rights expression based on the glyphs, symbols, words, messages, and the like, of the exemplary embodiments, advantageously, provides security. For example, if an unauthorized party, such as a hacker, an unauthorized computer device, and the like, gains access to a symbolic representation of the rights expression in the form of the glyphs, symbols, words, messages, and the like, of the exemplary embodiments, the unauthorized party is then faced with the task of interpreting the symbolic representation. By contrast, when employing a human readable rights expression representation, such as one employing an XML expression, and the like, an unauthorized party can view rights, conditions, other information, and the like, included in the rights expression. Thus, advantageously, an unauthorized person typically has to undertake a secondary activity, such as a second hacking attempt, a second decoding step, and the like, to unlock the information represented by the symbolic representation of a rights expression based on the glyphs, symbols, words, messages, and the like, of the exemplary embodiments.

[0091] In the case of the rights expression based on a symbolic representation in digital form, for example, based on the glyphs, symbols, words, messages, and the

like, of the exemplary embodiments, a trusted communication session can be established between a repository, such as a personal computer, a smart card, and the like, employing the symbolic representation and a device, such as a reading device, scanning device, and the like, reading the symbolic representation. In this way, the information included in the symbolic representation can continue to be protected when the symbolic representation is interpreted. However, a trusted session can be dispensed with, for example, if it is not critical to maintain the security of the symbolic representation, if it is not critical to use a method to maintain security, and the like.

[0092] The use of symbolic representations, such as the glyphs, symbols, words, messages, and the like, of the exemplary embodiments, can be a substitute for, or work in conjunction with, other kinds of security mechanisms, such as encryption, and the like. For example, a highly complex symbol, such as a multi-colored holograph, can be employed with the exemplary embodiments. In this exemplary embodiment, such a symbol can be literally seen, but the information represented therein can be made sufficiently complex, for example, so that such information cannot easily be discerned, the symbol cannot easily be counterfeited, and the like. Advantageously, such as a symbolic representation, for example, can be in plain view, in plain view when rendered, and the like, and embody sensitive information without a need to encrypt such information.

[0093] In an exemplary embodiment, symbolic representations, such as the glyphs, symbols, words, messages, and the like, of the exemplary embodiments, can be secretly designed, such that replication, faking, and the like, are difficult to achieve, and additional layers of security can be employed, such as watermarking schemes, authentication schemes, check-sum schemes, and the like. Thus, in an exemplary embodiment, the symbolic representations, for example, can include security aspects, and the like, that can be used in security methods and systems, and the like. For example, the symbolic representations of the exemplary embodiments can be embedded into an item, such as digital content, and the like, or can be associated with the item using any suitable method, for example, such as the methods disclosed in commonly-assigned U.S. Patents No. 5,530,235, No. 5,634,012, No. 5,638,443, No. 5,715,403, and No. 5,629,980, and the like.

[0094] In an exemplary embodiment, the symbolic representation of the exemplary embodiments can be used to encode a security object that can be used to carry a secondary message, hidden message, and the like, and that can be represented in a human readable form, and the like. Such a security object can be printed on an airline ticket, boarding card, and the like, or can be represented in an electronic form, such as on a magnetic stripe of the airline ticket, boarding card, and the like. In the case of the airline ticket, for example, such a security object can be used to notify authorities to react in a manner that is not apparent to the passenger holding the airline ticket.

[0095] Accordingly, various actions can be initiated with appropriate symbolic representations, some of which are not apparent to the passenger, making it easier for the authorities to react and control a given situation. In the case of a human readable security object, although the passenger can see the security object, the passenger would not know its import. However, when the security object is read by an appropriate device, viewed by a skilled person, and the like, the security object can reveal the hidden or secondary message, for example, such as a message indicating that the ticket holder should receive a secondary security check, a message alerting airline personnel that the ticket holder is a minor, a message alerting airline personnel that the ticket holder has special needs, and the like.

[0096] In an exemplary embodiment, the security object can reside, digitally, in human readable a form, and the like, in an item, such as an identification card, smart card, repository, and the like, and, for example, can be used to express a right of entry into a certain building, and a condition that to enter the bearer must present a Maryland driver's license number 1234567890 issued in the name of John Smith. Information in or on the item can clearly reveal to a possessor, even an unauthorized possessor, that the item can be used to gain access to the building, but the condition that possession of the drivers license also is required can be hidden, for example, until a security officer reads the security object detailing same. Accordingly, an authorized possessor can be given enough information in eye-readable form, for example, to gain access to a building, but hidden information can be included in the form of the security object in order to catch an unauthorized possessor of the item.

[0097] In an exemplary embodiment, a parent can use the security object, for example, encoded in or on a child's library card, and the like, for example, to indicate to a librarian that the child only can borrow "G" rated videos, books, and the like. In this exemplary embodiment, the librarian will able to detect the hidden message carried by the security symbol, while the child will not.

[0098] The exemplary embodiments, can be applied to any suitable situation where it is desirable that a possessor of an item bearing the security object, for example, not know the meaning of the security object, not know a full meaning of the security object, and the like. For example, a company can issue a visitor an identification badge with such a security object encoded thereon, and can inform the visitor that the badge can only be used to gain access to building A. In this exemplary embodiment, when the visitor attempts to gain access to building B by presenting the badge to an appropriate device, such as a card reader, and the like, the security object can be used to trigger an alert not only to deny entry to the building B, but also to trigger some other action as defined by the security object, for example, such as to sound an alarm, to detain the person in the case of human intervention, and the like.

[0099] In the exemplary embodiments, human intervention can be involved, for example, in the case of security personnel having to examining the item, or no human intervention may be needed, for example, in the case of an automatic security system. The badge also can be encoded with a right, for example, represented by a glyph, to enter building A in a restricted manner, such as on specified days, at specified times, and the like. Advantageously, the exemplary embodiments described herein, for example, can be used to permit a digital work or content to be rendered, can be employed to allow access to a building, such as by opening a door, and the like.

[00100] In an exemplary embodiment, a condition for exercise of a usage right, such as determining that a resource, such as a video file, or music file, being accessed, used, or acquired, has not been altered, or tampered with, for example, can be specified using the glyphs, symbols, words, messages, and the like, of the exemplary embodiments. Such a condition can be used in connection with one or more other conditions and usage rights. For example, a usage right can be used to specify that a video file can be rendered, played, and the like, an unlimited number of times on the condition that the rendering is performed prior to July 4, 2003, and provided that, on

each occasion that rendering is requested, a specified method determines that the video file has not been altered. If the file cannot be determined to be unaltered, then rendering can be denied and other consequences can follow, such as the DRM system 100 being programmed to lock down the file, and generate a report to the appropriate authority so that the suspected alteration can be investigated.

[00101] In an exemplary embodiment, the DRM system 100 can be configured to utilize a usage rights expression, for example, which includes a condition for exercising some right, such as to gain access to a service, gain access to a computer site, gain access to a digital work or content, to render a digital work or content, and the like. Such a condition can include, for example, determining that digital content in question has not been tampered with, has not been altered, and the like, and that the symbolic representation of the usage right has not been tampered with, has not been altered, and the like. Accordingly, if the DRM system 100 fails to determine that both that the digital content and the symbolic representation have not been altered, the exercise of the purported usage right can be denied. Advantageously, this exemplary embodiment provides a two-pronged layer of protection, because a person attempting gain unauthorized access or otherwise obtain something to which they are not entitled would have to pass two hurdles. For example, such unauthorized party would have to perform to forgeries or hack two things.

[00102] In an exemplary embodiment, a person wishing to exercise a usage right, such as a right to view a video file, and the like, can present an item including a glyph representing such a usage right. The glyph can be in electronic form, in printed form, in a hard copy format, and the like. In this exemplary embodiment, a DRM application, such as the client component 122, and the like, in addition to being configured to ensure that conditions for exercise of the usage right are satisfied, can be configured to determine that the glyph and/or the video file have not been altered in order to grant exercise of the usage right. If the DRM application determines that the glyph and/or the video file have been altered, the DRM application can be configured to prevent exercise of the usage right. If, however, the DRM application determines that the glyph and the video file have not been altered, the DRM application can be configured to allow the exercise of the usage right, for example,

subject to successful completion of other processes employed by the DRM application.

[00103] In an exemplary embodiment, the determination of non-alteration can be employed before exercise of the usage right is allowed, thus, erring on the side of the usage right not being exercised if such a test fails. This approach, however, can be varied, wherein the determination of non-alteration is not to be made, thus, erring on the side of permitting the exercise of the usage right.

[00104] In a further exemplary embodiment, however, a hybrid approach is made possible. For example, a determination of non-alteration can be employed to exercise the full usage rights requested, but if such a determination fails, then some of the usage rights can be exercisable, while others may not. Thus, the exercisable usage rights can be configured as a subset of the full usage right, but need not be. For example, the DRM system 100 can be configured to permit rendering by display of a file on a computer screen, but to not permit the file to be copied, moved, loaned, transferred, and the like. As a further example, the DRM system 100 can be configured to generate an error report to an authorizing authority, such as a server, repository, device, and the like, where the report can be reviewed, automatically, based on human intervention, and the like. The report can be configured to detail the determinations made by the DRM system 100, and the results of such determinations. The DRM system 100 then can permit exercise of the usage rights, if authorized to do so by the authorizing authority.

[00105] The exemplary embodiments, advantageously, can be employed to ensure that an item, such as photographs, for example, police crime scene photographs, and the like, have not been altered. In this exemplary embodiment, wherein a digital photograph is to be relied on, it can be important to ensure that the photograph is not altered, but probably it can be even more important to ensure that if the photograph is altered that such alteration can be detected. The more complex the symbol employed, the more difficult it is to effect an alteration in either the symbol or the digital content in a way that cannot be detected. Accordingly, the level of complexity employed in the symbolic representations of the exemplary embodiments depends on the level of security desired. The exemplary embodiments can be employed with objects other

than photographs, video files, and the like, and in situations, other than evidentiary findings, and the like, as will be appreciated by those skilled in the relevant art(s).

[00106] Any suitable method to detect if an item, such as a photograph, video file, and the like, has been tampered with can be employed with the exemplary embodiments. For example, a verification method, such as described in commonly assigned, co-pending, U.S. Patent Application Serial No. 10/147,304 of *Tadayon et al.*, entitled "METHOD AND APPARATUS FOR VERIFYING DATA INTEGRITY BASED ON DATA COMPRESSION PARAMETERS," filed on May 17, 2002, the entire disclosure of which is hereby incorporated by reference herein, can be employed. Such a verification method, for example, can include determining one or more of various parameters resulting from, or used for, compression or other manipulation of the data and comparing the value or character of that parameter to the original value or character after transmission, processing and/or a period of time. Any compression scheme or other manipulation can be used. Further, combinations of the parameters can be used and processed in various manners through various logical processes.

[00107] In an exemplary embodiment, both background and foreground symbols, such as the glyphs, symbols, words, messages, and the like, of the exemplary embodiments, can be configured to express a meaning, message, and the like. For example, a meaning of the background symbol can be that when the background symbol is present the foreground symbol can be interpreted. However, both the background symbol and the foreground symbol can be configured to express a meaning. For example, the DRM system 100 can be configured to interpret a first symbol if a second symbol is present in a certain way, such as printed on a same substrate as the first symbol, printed at a certain physical location relative to the first symbol, and the like.

[00108] In addition, each symbol can be configured to express part of the information being conveyed, for example, such that the information being conveyed can be distributed over a plurality of symbols, the information being conveyed can be distributed over a plurality of symbols in a redundant manner, and the like. Further, all of the symbols can be configured to be in digital form, one of a plurality of symbols can be configured to be in digital form while the others are not, and the like.

For example, a paper ticket can include a printed symbol, which when read by an appropriate reader, machine, and the like, can be detected to represent a usage right. However, a condition to be satisfied in order to exercise the usage right can be the presentment to the reader, machine, and the like of a digital symbol, for example, included in a repository, such as a smart card, handheld device, and the like, or presentment of an additional printed symbol, and the like.

[00109] In an exemplary embodiment, a symbol, such as the glyphs, symbols, words, messages, and the like, of the exemplary embodiments, can be configured to convey little or no information, but, instead, convey information on how to obtain information. In this exemplary embodiment, for example, the symbol can be configured as a pointer to another system, device, file, and the like. This exemplary embodiment can be useful where security is desired, because an unauthorized party, device, and the like, would have to hack, crack, and the like, multiple systems to obtain the information. For example, the unauthorized party would have to crack the symbol to determine that in order to obtain unauthorized access a second system must be compromised. The unauthorized party would then have to crack the second system.

[00110] Thus, in this exemplary embodiment, symbols can be configured as pointers to a system, device, place, and the like, where information can be obtained, a transaction is to take place, and the like. In an exemplary embodiment, for example, one or more symbols can be configured to convey Uniform Resource Locator (URL) information, for example, for a system, a device, a resource, a file, a document, a music file, a video file, a movie, an e-book, software, and the like. Accordingly, when a suitable reader, machine, and the like, reads the symbol, the symbol can be interpreted as representing the URL and appropriate actions can be taken, for example, such as directing a Web browser to the URL for gaining accessing a music file, video file, and the like.

[00111] The present invention recognizes that there are situations where establishing a communications link with a server, repository, device, and the like, for example, over the Internet, via a telephone line, modem, and the like, may not practical or even possible. In this exemplary embodiment, a user can attempt to gain access to an item, such as digital content, a service, and the like, by initiating an

online transaction. The online transaction can result in the user gaining access to the item requested. However, there may be the situation where the ability to communicate can be constrained. For example, a user may have received through the mail a disk including a movie file, a user may have on a hard drive of a personal computer, such as in the client environment 120, a movie file, and the like.

[00112] In the above case, the owner of the movie file, such as a movie studio, video store, and the like, for example, can have the user initiate an online transaction, transmit a credit card number to pay a fee for the accessing the movie, and receive a license that can permit rendering of the movie by viewing of the movie file on a screen of the personal computer. However, it may not be practical, for example, for the user to initiate an online session, the user may not wish to initiate an online session, the user may not be able to initiate an online session, and the like. Thus, according to exemplary embodiment, the user can employ a ticket, for example, including a license granting the user the right render the movie by viewing the movie file on the screen of the personal computer, and that can be read by the personal computer.

[00113] In an exemplary embodiment, the ticket can be in the form of a symbol, such as the glyphs, symbols, words, messages, and the like, of the exemplary embodiments. Depending on a level of security desired, the symbol can be made complex to deter counterfeiting. In addition, each use of the ticket can be recorded in a record, for example, on the ticket itself, in another repository, such as the personal computer of the user, and the like. Such a record can be configured to indicate the number of times the ticket has been used, wherein the ticket can be configured to be used one time, many times, and the like. For example, the user may have acquired the right to view ten movies distributed by a movie studio, movie store, and the like. This information can be recorded in the personal computer of the user. Then, after each rendering of a corresponding movie file, for example, respectively authorized by a ticket from the movie studio, the number of views to which the user remains entitled can be reduced by one. In this exemplary embodiment, the ticket need not record information concerning a use thereof, but rather information for authorizing use of the corresponding movie file.

[00114] In a further exemplary embodiment, however, the ticket can be used to record information about use of the ticket. For example, each use of the ticket to authorize rendering of the movie file can result in the number of authorized uses to be reduced by one and to be reflected on the ticket, wherein the rendering repository, such as the personal computer of the user, another repository device, and the like, need not record information concerning use. In an exemplary embodiment, the ticket can be in digital form so that the use information can be recorded on the ticket. However, according to a further exemplary embodiment, such use information can be a printed on the ticket, and the like. In addition, so that the ticket cannot be used once the number of authorized uses have expired, for example, the ticket can be altered, information can be recorded on the ticket, and the like. Such alteration can be performed, for example, via mechanically means by the device reading the ticket, by human intervention, such as by a clerk at a kiosk, and the like.

[00115] In an exemplary embodiment, two tickets can be employed, wherein one ticket can be in digital form, and record information concerning use, and the other ticket can be in digital or printed hard copy form and provide information about the item to which access is desired. For example, a movie studio can distribute a hard copy printed ticket which can employ one or more glyphs to express rights expression information concerning the usage rights, manners of use, conditions, and the like, associated with a movie file. The printed ticket can be presented together with the digital ticket to an appropriate device. Then, the device can be configured to read the rights expression information that can be provided on either or both tickets based on the glyphs, process a transaction permitting the usage right to be exercised, such as rendering the movie by viewing the movie file on a screen of a personal computer, subject to applicable conditions, and record the use information, for example, on one or both of the tickets, on the rendering device, on another device, and the like.

[00116] In an exemplary embodiment, a symbol, such as the glyphs, symbols, words, messages, and the like, of the exemplary embodiments, can be employed to express rights expression information, for example, in a resource constrained system or environment, such as on devices having a small foot prints, handheld devices, systems having limited processing resources, and the like.

[00117] As noted above, in an exemplary embodiment, a rights expression can be reduced to a suitable symbol, groups of symbols, sound, groups of sounds, light pulse, groups of light pulses, and the like, representing the rights expression information being expressed. For example, a predetermined tone, set of tones, and the like, can be used to represent an unambiguous canonical rights expression encoded in a binary format. For example, an exemplary unambiguous canonical rights expression, encoded in a binary format, can given by:

01 03 04 202103123 05 22 06 232103456 09 24 00 202103024,

where:

01	*<license>*
03	*<grant>*
04	*principal [Processing instruction]*
202103123	*<cm:device cmid="123"/>*
05	*right [Processing instruction]*
22	*<cx:play>*
06	*resource [Processing instruction]*
232103456	*<cm:song cmid="456"/>*
09	*issuer [Processing instruction]*
24	*<cm:issuerDevice>*
00	*next level*
202103024	*<cm:device cmid="024"/>*

[00118] According to an exemplary embodiment, a manner of use of an item can be specified with a symbol, such as the glyphs, symbols, words, messages, and the like, of the exemplary embodiments. In addition, glyphs can be expressed in terms of sound, color, image, pulse, light, and the like, signals, wherein the amplitude, frequency, and width of the corresponding signals could be modified to modify an expressed message. Further, information regarding rights, conditions, and the like, can be expressed as three dimensional (3D) information, such as via a holographic glyph image, and the like.

[00119] According to an exemplary embodiment, a symbol, such as the glyphs, symbols, words, messages, and the like, of the exemplary embodiments, can be

configured to convey rights expression information, such as an expiration date, and the like, for example, to prevent the display of information on a monitor of a computer, and the like. In this exemplary embodiment, the glyph conveying the rights expression information can be displayed on the monitor of the computer, and can be scanned, wanded, and the like, via a suitable detector, hand-held scanner, and the like. For example, such rights expression information can be configured for use with an auction Web site, a storefront on the Internet, and the like.

[00120] According to an exemplary embodiment, sound, light, a combination of light and sound, and the like, can be is used for transmission of rights expression information. For example, the movement of a user in a building can be monitored, and the presence of the user in a room can be monitored, detected, and the like, for example, using an iris scan, a smart card, voice recognition, biometrics, a device on the clothing of the user, and the like. Then, according to a security level assigned to the room, such as the Pentagon library, items in the room, such as top-secret files, and the like, privileges of the user for gaining access to the corresponding information, data, services, and the like, can be based on usage rights, conditions, restrictions, and the like, specified in the rights expression information transmitted in the room.

[00121] According to an exemplary embodiment, for security purposes, a background signal, for example, including noise, such as semi-random noise, random noise, a steganographically encoded signal, a scrambled signal, and the like, can be added to a symbol, such as the glyphs, symbols, words, messages, and the like, of the exemplary embodiments that can be used to convey rights expression information. In this exemplary embodiment, a flag, an indicator, and the like, can be employed to indicate that the background signal can be neglected, for all or a part of the signal, by an appropriate scanner of the symbol conveying the rights expression information.

[00122] Further, the rights expression information can be represented as a video image or multimedia content consisting of video, sound, and text and having static and dynamic portions. Any of these elements of the multimedia content can, alone or in combination, be used to represent the rights expression information. The rights expression information can be expressed by being distributed throughout the portions or by being redundantly expressed by the portions for security and reliability.

[00123] The symbolic representations of rights expressions in the exemplary embodiments can be used, for example, in a digital ticket that can be scanned or read by a machine. The symbolic representations can be customized to the needs of a specific group, company or industry, in which case the scanners or readers also can be specialized and customized for a specific purpose or task. As with bar codes designed for various industries with limited feature space so as to provide decisive, unambiguous, and fast interpretations, the symbolic representations of rights expressions can be used to condense the amount of information, reduce the amount of hardware and/or software required to understand the information, and speed up the process for the convenience of the end user of the content, while providing relatively lower error rates and relatively higher precision.

[00124] Barcode or symbol readers, pattern recognition engines, scanners, and the like, can be employed, advantageously, with minor or no modifications to hardware and/or software for practicing the exemplary embodiments. The pattern recognition engines can include neural network, fuzzy logic techniques, and the like. Accordingly, available technologies can be used for the reader and recognition engine functions, which reduces the set-up costs for practicing the exemplary embodiments. Advantageously, processing the symbols expressing the rights information using the readers or pattern recognition processors, for example, to wand the symbol patterns and extract the rights expression information, results in speed and reliability during the interpretation process for the end user of the content.

[00125] In addition, the rights expression information can be output as plain English text, any other suitable human-readable language or form, such as voice or sound, and the like. Accordingly, the end user of the content does not have to know the rules and/or language related the rights expression information, drastically reducing the learning period for the end user, and thus, significantly reducing the operational expenses for the end user.

[00126] The symbolic representations of the exemplary embodiments can be printed on a physical substrate, such as a piece of paper, or can be displayed on a computer monitor, for scanning by an appropriate reader, and the like. The rights expression information can be expressed with symbols in the form of parallel lines, bar codes with different widths, angles, ratios, perspectives, or distances, crossed

lines, concentric circles, geometrical shapes, different colors, visible or invisible light sources with different wavelengths for representing different glyphs and shapes and for easy and fast optical recognition, Morse codes, laser pulses with different durations, Japanese characters, English characters, one-dimensional images, two-dimensional images, symbols, sets of symbols with specific angular relationships, sets of symbols with specific spatial relationships for defining different types of grammar or rules, rotational invariant symbols, spatial invariant symbols, symbols with more than one meaning, hidden meanings or meanings not readable by humans, or readable by specialized machines to keep some information secret, watermarks, steganographically encoded symbols, symbols accompanied by human-readable messages, symbols readable by machines only, combinations thereof, and the like.

[00127] In addition, different rights expression information or messages can be conveyed based on the order of the symbols, or placement of the symbols with respect to each other. For example, the specific sequence of symbols can convey a specific situation or context, such as the information about an industry or purpose of the rights expression information. The symbolic representation can be in digital, such as electronic form, and the like, as well as in printed form, visible form, and the like. The symbols can be stored on some sort of electronic media, such a computer hard drive, server, floppy disk, smart card device, and the like. The symbolic representations can be generated using templates, a graphical user interface (GUI), and the like, advantageously, not requiring the end user of the content or providers of the content to have a complete knowledge of a rights expression language and/or grammar.

[00128] In addition, in further exemplary embodiments, the recipe, algorithm, formula, and the like, used for the generation of the symbols could be in public domain or governed by a standards body, to encourage standardization of the symbols. The standards body then could set the parameters for shape or methods of generation of the symbols. In other embodiments, however, the recipe, algorithm, formula, and the like, used for the generation of the symbols could be kept secret from the public, for example, to discourage unauthorized users from generating fake symbols and/or digital tickets. In further exemplary embodiments, if the parameters

in the shape or placement of the symbols are not according to the set standard, the symbol reader can be configured to reject the ticket as invalid.

[00129] In the exemplary embodiments, the rights expression information extracted from a symbol or symbols can instruct a scanner or reader to perform a predetermined action. For example, a digital ticket can include a symbol or symbols corresponding to a rights expression indicating that a user has the right to print 4 copies of a report. In this exemplary embodiment, once the user gets a first copy, the symbols also can instruct the reader to print another symbol on the digital ticket, print a new ticket, alter the ticket, and the like, so as to indicate that the user now has the right to print 3 more copies.

[00130] In the exemplary embodiments, the symbols themselves can have a grammar of their own, for example, a relationship internal to symbols themselves, used to express new meanings or extra information, for example, with respect to the neighboring symbols or a predetermined proximity to other specific symbols. For example, if a given symbol is within or exactly 2 symbols away from another symbol, such positional relationship could express further information that can be concluded from that sequence of symbols. In other words, such grammar can be based on the context or proximity of the symbols, with respect to each other or with respect to a marker, and the like.

[00131] FIGs. 25-26 are exemplary flowcharts for illustrating the operation of the exemplary embodiments for expressing usage rights for content or other items based on modulated signals or graphical representations of the usage rights. For example, FIG. 25 is an exemplary flowchart for illustrating graphical representation of rights expression information, and FIG. 26 an exemplary flowchart for illustrating modulated signal-based representation of rights expression information.

[00132] Accordingly, in FIG. 25, at step 2501, for example, the rights expression information can be specified. Then, at step 2503, for example, a graphical representation of the rights expression information can be generated, for example, using the glyphs, symbols, words, messages, and the like, of the exemplary embodiments. According to an exemplary embodiment, for example, the computer 130 of the DRM system 100 of FIG. 1 can be configured to perform the process for the graphical representation of rights expression information of FIG. 25. However,

any suitable device, system and the like, for example, such as one or more of the devices and subsystems of the DRM system 100, can be configured to perform such processing.

[00133] Similarly, in FIG. 26, at step 2601, for example, the rights expression information can be specified. Then, at step 2603, for example, a modulated signal-based representation of the rights expression information can be generated, for example, using the glyphs, symbols, words, messages, and the like, of the exemplary embodiments. According to an exemplary embodiment, for example, the computer 130 of the DRM system 100 of FIG. 1 can be configured to perform the process for the modulated signal-based representation of rights expression information of FIG. 26. However, any suitable device, system and the like, for example, such as one or more of the devices and subsystems of the DRM system 100, can be configured to perform such processing.

[00134] The DRM system 100, for example, as described with respect to FIGs. 1-26, can be used to store information relating to various processes described herein. This information can be stored in one or more memories, such as a hard disk, optical disk, magneto-optical disk, RAM, and the like, of the devices and sub-systems of DRM system 100. One or more databases of the devices and subsystems of the DRM system 100 can store the information used to implement the exemplary embodiments. The databases can be organized using data structures, such as records, tables, arrays, fields, graphs, trees, lists, and the like, included in one or more memories, such as the memories listed above.

[00135] All or a portion of the DRM system 100, for example, as described with respect to FIGs. 1-26, can be conveniently implemented using one or more general purpose computer systems, microprocessors, digital signal processors, micro-controllers, and the like, programmed according to the teachings of the disclosed exemplary embodiments. Appropriate software can be readily prepared by programmers of ordinary skill based on the teachings of the disclosed exemplary embodiments. In addition, the DRM system 100 can be implemented by the preparation of application-specific integrated circuits or by interconnecting an appropriate network of component circuits.

[00136] Advantageously, the exemplary embodiments described herein can be employed in offline systems, online systems, and the like, and in applications, such as TV applications, computer applications, DVD applications, VCR applications, appliance applications, CD player applications, and the like. In addition, the signals employed to transmit the glyphs, symbols, words, messages, and the like, of the exemplary embodiments, can be configured to be transmitted within the visible spectrum of a human, within the audible spectrum of a human, not within the visible spectrum of a human, not within the audible spectrum of a human, combinations thereof, and the like.

[00137] While the present invention have been described in connection with a number of embodiments and implementations, the present invention is not so limited but rather covers various modifications and equivalent arrangements, which fall within the purview of the appended claims.

What is Claimed is:

1. A method for creating a rights expression for association with an item for use in a system for controlling use of the item in accordance with the rights expression, said method comprising:

specifying rights expression information indicating a manner of use of an item; and

generating a graphical representation of said rights expression information, wherein said graphical representation is configured to be interpreted by an interpreter of a system for controlling use of said item to permit enforcement of said rights expression based on said rights expression information.

2. The method as recited in claim 1, wherein said graphical representation comprises a glyph.

3. The method as recited in claim 2, wherein said glyph comprises lines arranged in a predetermined order for representing said rights expression information.

4. The method as recited in claim 3, wherein said lines include colored lines.

5. The method as recited in claim 2, wherein said glyph comprises two-dimensional shapes arranged in a predetermined order for representing said rights expression information.

6. The method as recited in claim 5, wherein said shapes include colored shapes.

7. The method as recited in claim 5, wherein a spatial relationship of said shapes is used to convey said rights expression information.

8. The method as recited in claim 2, wherein said glyph comprises a colored glyph.

9. The method as recited in claim 1, wherein said graphical representation comprises a printable glyph.

10. The method as recited in claim 9, further comprising:

printing said printable glyph on print media.

11. The method as recited in claim 10, further comprising:

reading the printed printable glyph with a computing device to extract said rights expression information for enforcement of the rights expression.

12. The method as recited in claim 1, wherein said graphical representation comprises a displayable glyph.

13. The method as recited in claim 12, further comprising:

displaying said displayable glyph on a display device.

14. The method as recited in claim 13, further comprising:

reading the displayed displayable glyph with a computing device to extract said rights expression information for enforcement of the rights expression.

15. The method as recited in claim 12, further comprising:

displaying said displayable glyph in two dimensions.

16. The method as recited in claim 12, further comprising:

displaying said displayable glyph in three dimensions.

17. The method as recited in claim 1, wherein said graphical representation comprises a holographic glyph.

18. The method as recited in claim 17, further comprising:

displaying said holographic glyph on a display device.

19. The method as recited in claim 17, further comprising:

reading the displayed holographic glyph with a computing device to extract said rights expression information for enforcement of the rights expression.

20. The method as recited in claim 17, further comprising:

printing said holographic glyph on print media.

21. The method as recited in claim 20, further comprising:

reading the printed holographic glyph with a computing device to extract said rights expression information for enforcement of the rights expression.

22. The method as recited in claim 1, wherein said graphical representation comprises a plurality of glyphs.

23. The method as recited in claim 22, further comprising:

arranging said glyphs to form words corresponding to said rights expression information.

24. The method as recited in claim 23, further comprising:

arranging said words to form sentences corresponding to said rights expression information.

25. The method as recited in claim 22, further comprising:

arranging said glyphs so that that a plurality of arrangements correspond to a plurality of interpretations for said rights expression information.

26. The method as recited in claim 1, wherein said graphical representation comprises a machine readable symbol.

27. The method as recited in claim 1, wherein said graphical representation comprises a human readable symbol.

28. The method as recited in claim 1, wherein said graphical representation comprises a symbol in digital form.

29. The method as recited in claim 1, wherein said graphical representation comprises a printed symbol.

30. The method as recited in claim 1, wherein said graphical representation comprises a symbol not discernable by a human.

31. The method as recited in claim 30, wherein said symbol not discernable to a human comprises a symbol not visible by a human.

32. The method as recited in claim 1, wherein said rights expression information further includes information relating to a history of the use of said item.

33. The method as recited in claim 1, wherein said rights expression information further includes information relating to a state of the use of said item.

34. The method as recited in claim 1, wherein said graphical representation comprises a symbol having a meaning hidden from a human.

35. The method as recited in claim 1, further comprising:
embedding said graphical representation as part of a logo.

36. The method as recited in claim 1, further comprising:
adding noise around said graphical representation to obfuscate detection of the rights expression information.

37. The method as recited in claim 1, further comprising:
embedding said graphical representation as part of a watermark.

38. The method as recited in claim 1, wherein said rights expression information includes conditions that must be satisfied in order to exercise a manner of use of at least one of digital content, a service, an abstract object, a resource, and goods.

39. The method as recited in claim 1, further comprising:

configuring said graphical representation to include a background portion and a foreground portion.

40. The method as recited in claim 39, further comprising:

configuring said foreground portion to represent said rights expression information, wherein said foreground portion is configured to be interpreted based on information represented in said background portion.

41. The method as recited in claim 1, further comprising:

generating said graphical representation of said rights expression information including a first symbol that is interpreted if a second symbol is present in a predetermined manner.

42. The method as recited in claim 1, further comprising:

determining that said graphical representation of said rights expression information is unaltered as a condition for interpretation of said graphical representation.

43. The method as recited in claim 1, further comprising:

configuring said graphical representation as a pointer to one of another graphical representation associated with said rights expression information, and information associated with said rights expression information.

44. The method as recited in claim 1, wherein said rights expression information is in the form of a template or profile.

45. A method as recited in claim 1, wherein said graphical representation comprises dynamic video content.

46. A method as recited in claim 1, wherein said graphical representation comprises dynamic multimedia content including a sound portion, a static image portion, a video, and a text portion, and wherein said rights expression information is expressed by each of said portions.

47. A method as recited in claim 46, wherein said rights expression information is distributed throughout each of said portions.

48. A method as recited in claim 46, wherein said rights expression information is redundantly expressed by each of said portions.

49. A system for creating a rights expression for association with an item for use in a system for controlling use of the item in accordance with the rights expression, said system comprising:

means for specifying rights expression information indicating a manner of use of an item; and

means for generating a graphical representation of said rights expression information, wherein said graphical representation is configured to be interpreted by an interpreter of a system for controlling use of said item to permit enforcement of said rights expression based on said rights expression information.

50. The system as recited in claim 49, wherein said graphical representation comprises a glyph.

51. The system as recited in claim 49, wherein said glyph comprises lines arranged in a predetermined order for representing said rights expression information.

52. The system as recited in claim 51, wherein said lines include colored lines.

53. The system as recited in claim 50, wherein said glyph comprises two-dimensional shapes arranged in a predetermined order for representing said rights expression information.

54. The system as recited in claim 53, wherein said shapes include colored shapes.

55. The system as recited in claim 53, wherein a spatial relationship of said shapes is used to convey said rights expression information.

56. The system as recited in claim 50, wherein said glyph comprises a colored glyph.

57. The system as recited in claim 49, wherein said graphical representation comprises a printable glyph.

58. The system as recited in claim 57, further comprising:

means for printing said printable glyph on print media.

59. The system as recited in claim 58, further comprising:

means for reading the printed printable glyph to extract said rights expression information for enforcement of the rights expression.

60. The system as recited in claim 49, wherein said graphical representation comprises a displayable glyph.

61. The system as recited in claim 60, further comprising:

means for displaying said displayable glyph.

62. The system as recited in claim 61, further comprising:

means for reading the displayed displayable glyph to extract said rights expression information for enforcement of the rights expression.

63. The system as recited in claim 60, further comprising:

means for displaying said displayable glyph in two dimensions.

64. The system as recited in claim 60, further comprising:

means for displaying said displayable glyph in three dimensions.

65. The system as recited in claim 49, wherein said graphical representation comprises a holographic glyph.

66. The system as recited in claim 65, further comprising:

means for displaying said holographic glyph.

67. The system as recited in claim 65, further comprising:

means for reading the displayed holographic glyph to extract said rights expression information for enforcement of the rights expression.

68. The system as recited in claim 65, further comprising:

means for printing said holographic glyph on print media.

69. The system as recited in claim 68, further comprising:

means for reading the printed holographic glyph to extract said rights expression information for enforcement of the rights expression.

70. The system as recited in claim 49, wherein said graphical representation comprises a plurality of glyphs.

71. The system as recited in claim 70, further comprising:

means for arranging said glyphs to form words corresponding to said rights expression information.

72. The system as recited in claim 71, further comprising:

means for arranging said words to form sentences corresponding to said rights expression information.

73. The system as recited in claim 70, further comprising:

means for arranging said glyphs so that that a plurality of arrangements correspond to a plurality of interpretations for said rights expression information.

74. The system as recited in claim 49, wherein said graphical representation comprises a machine readable symbol.

75. The system as recited in claim 49, wherein said graphical representation comprises a human readable symbol.

76. The system as recited in claim 49, wherein said graphical representation comprises a symbol in digital form.

77. The system as recited in claim 49, wherein said graphical representation comprises a printed symbol.

78. The system as recited in claim 49, wherein said graphical representation comprises a symbol not discernable by a human.

79. The system as recited in claim 78, wherein said symbol not discernable to a human comprises a symbol not visible by a human.

80. The system as recited in claim 49, wherein said rights expression information further includes information relating to a history of the use of said item.

81. The system as recited in claim 49, wherein said rights expression information further includes information relating to a state of the use of said item.

82. The system as recited in claim 49, wherein said graphical representation comprises a symbol having a meaning hidden from a human.

83. The system as recited in claim 49, further comprising:

means for embedding said graphical representation as part of a logo.

84. The system as recited in claim 49, further comprising:

means for adding noise around said graphical representation to obfuscate detection of the rights expression information.

85. The system as recited in claim 49, further comprising:

means for embedding said graphical representation as part of a watermark.

86. The system as recited in claim 49, wherein said rights expression information includes conditions that must be satisfied in order to exercise a manner of use of at least one of digital content, a service, an abstract object, a resource, and goods.

87. The system as recited in claim 49, further comprising:

means for configuring said graphical representation to include a background portion and a foreground portion.

88. The system as recited in claim 87, further comprising:

means for configuring said foreground portion to represent said rights expression information, wherein said foreground portion is configured to be interpreted based on information represented in said background portion.

89. The system as recited in claim 49, further comprising:

means for generating said graphical representation of said rights expression information including a first symbol that is interpreted if a second symbol is present in a predetermined manner.

90. The system as recited in claim 49, further comprising:

means for determining that said graphical representation of said rights expression information is unaltered as a condition for interpretation of said graphical representation.

91. The system as recited in claim 49, further comprising:

means for configuring said graphical representation as a pointer to one of another graphical representation associated with said rights expression information, and information associated with said rights expression information.

92. The system as recited in claim 49, wherein said means for specifying and said means for generating comprise devices of a computer system.

93. The system as recited in claim 49, wherein said means for specifying and said means for generating comprise computer readable instructions recorded on a medium.

94. In a system for controlling use of the item in accordance with a rights expression associated with said item, a rights expression comprising:

rights expression information indicating a manner of use of an item; and

a graphical representation of said rights expression information, wherein said graphical representation is configured to be interpreted by an interpreter of a system for controlling use of said item to permit enforcement of said rights expression based on said rights expression information.

95. The system as recited in claim 49, wherein said rights expression information is in the form of a template or profile.

96. A system as recited in claim 49, wherein said graphical representation comprises dynamic video content.

97. A system as recited in claim 49 wherein said graphical representation comprises dynamic multimedia content including a sound portion, a static image portion, a video, and a text portion, and wherein said rights expression information is expressed by each of said portions.

98. A system as recited in claim 97, wherein said rights expression information is distributed throughout each of said portions.

99. A system as recited in claim 97, wherein said rights expression information is redundantly expressed by each of said portions.

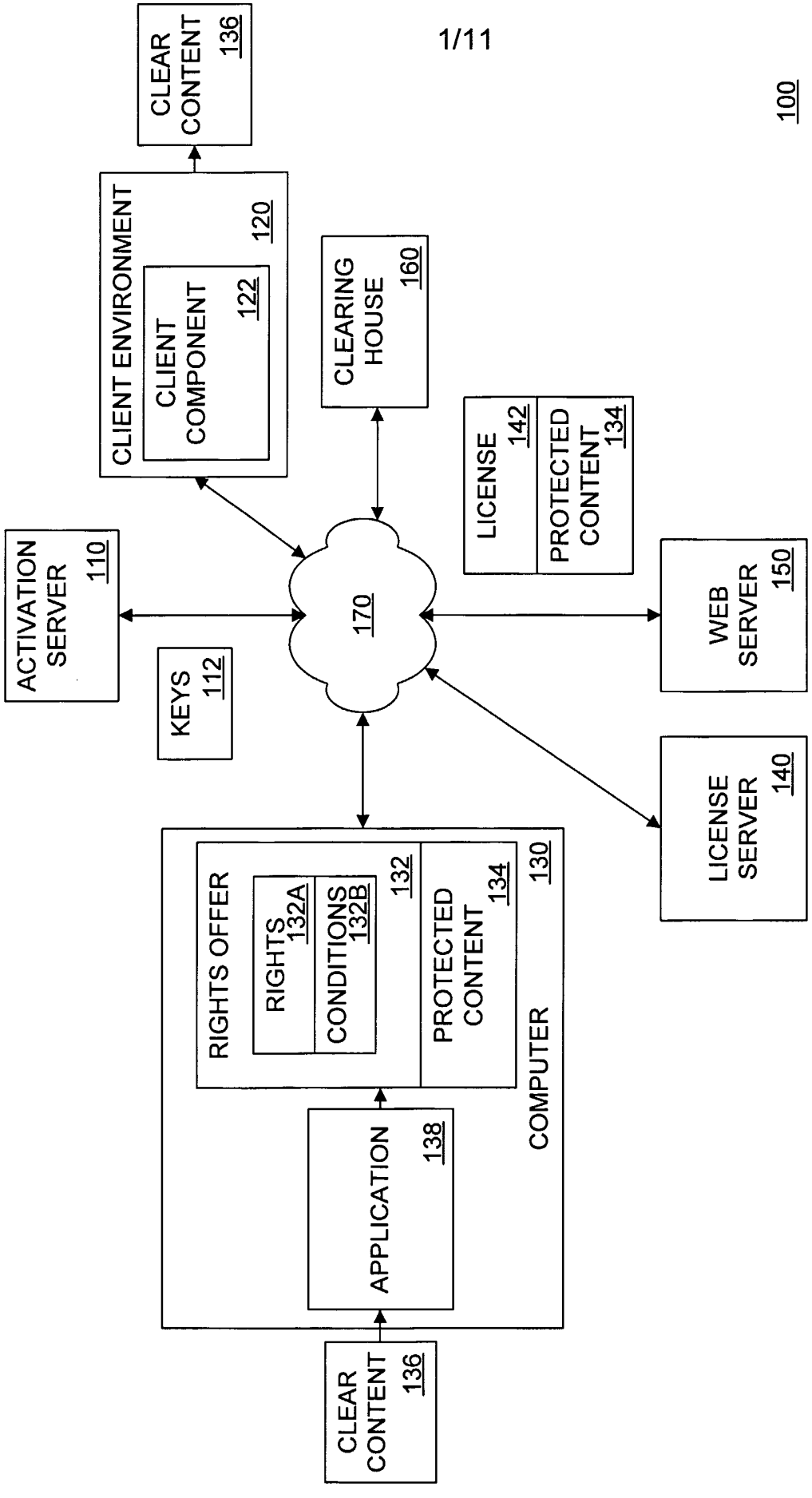
100
CLEAR CONTENT 136
CLIENT ENVIRONMENT 120
CLIENT COMPONENT 122
CLEARING HOUSE 160
LICENSE 142
PROTECTED CONTENT 134
ACTIVATION SERVER 110
KEYS 112
170
WEB SERVER 150
LICENSE SERVER 140
RIGHTS OFFER 132
RIGHTS 132A
CONDITIONS 132B
PROTECTED CONTENT 134
COMPUTER 130
APPLICATION 138
CLEAR CONTENT 136

FIG. 1

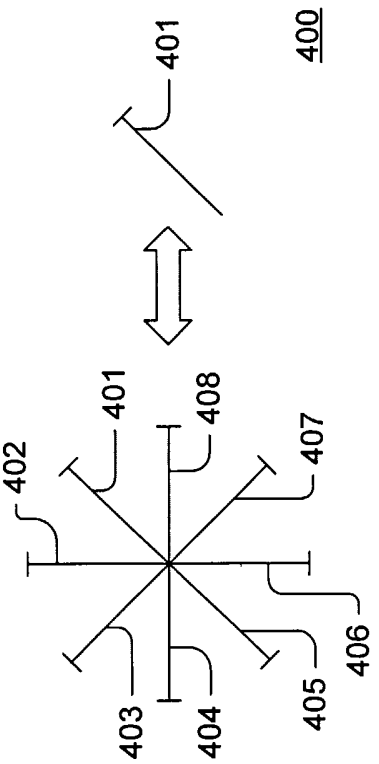

FIG. 4

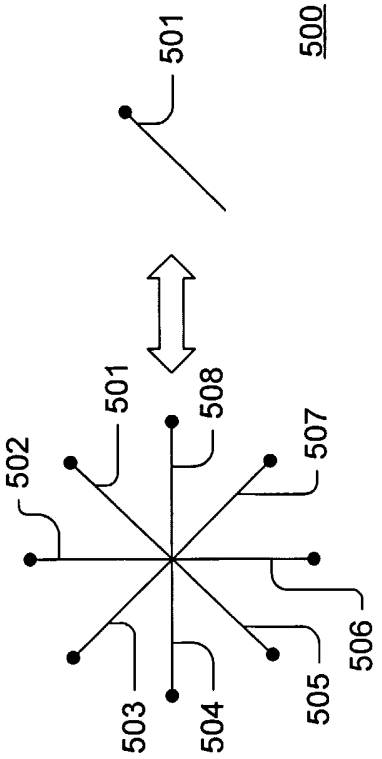

FIG. 5

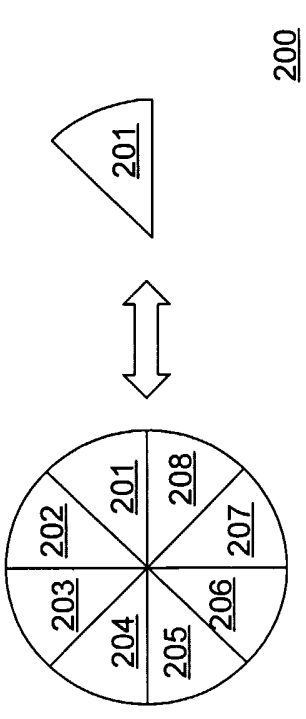

FIG. 2

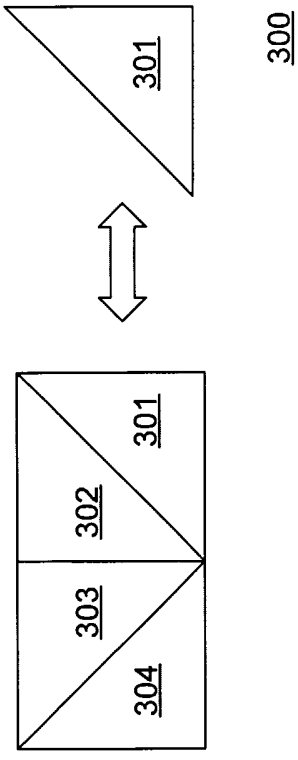

FIG. 3

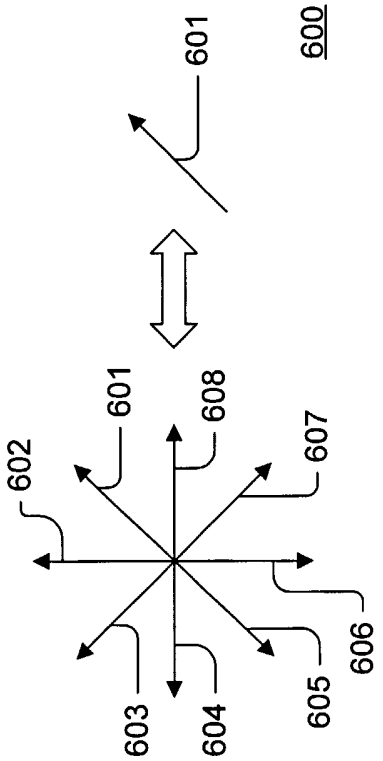
600
601
601
602
603
604
605
606
607
608

FIG. 6

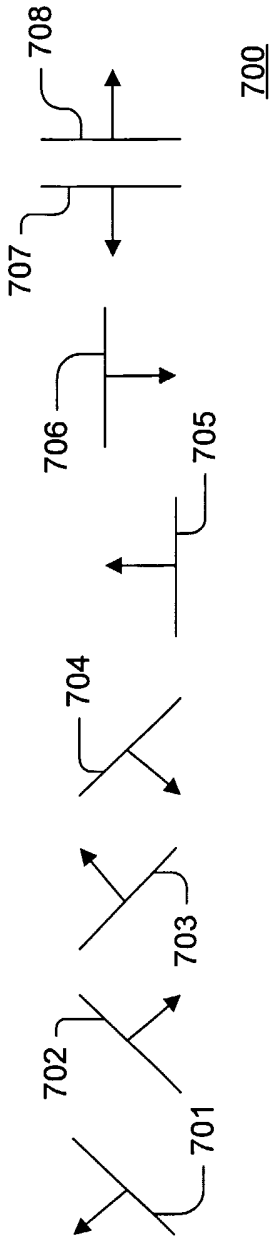
700
701
702
703
704
705
706
707
708

FIG. 7

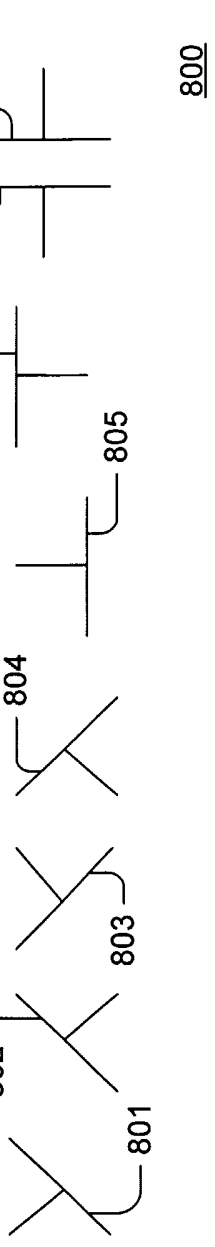

FIG. 8

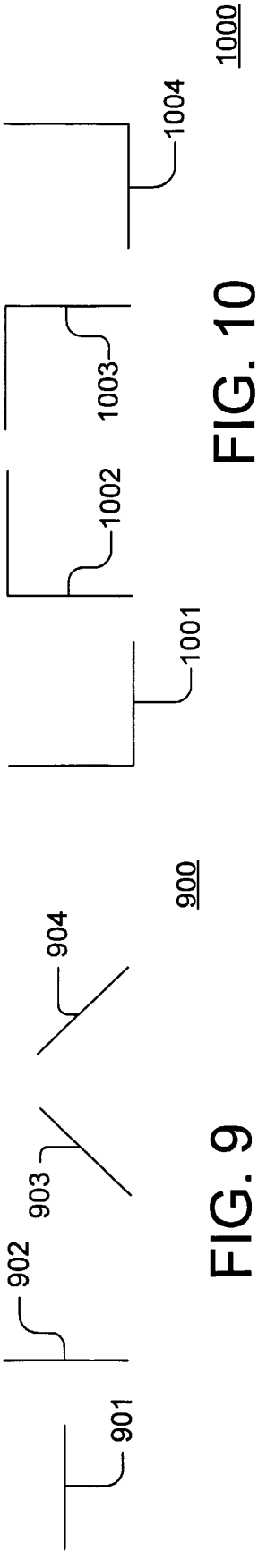

FIG. 9

FIG. 10

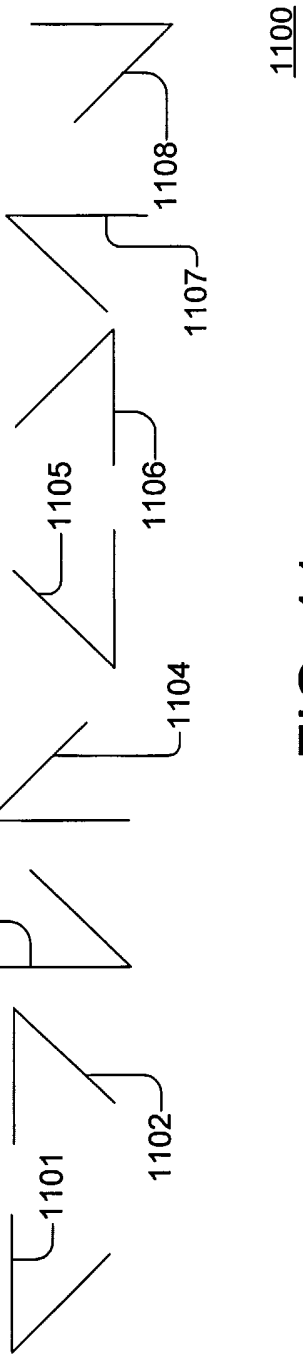

FIG. 11

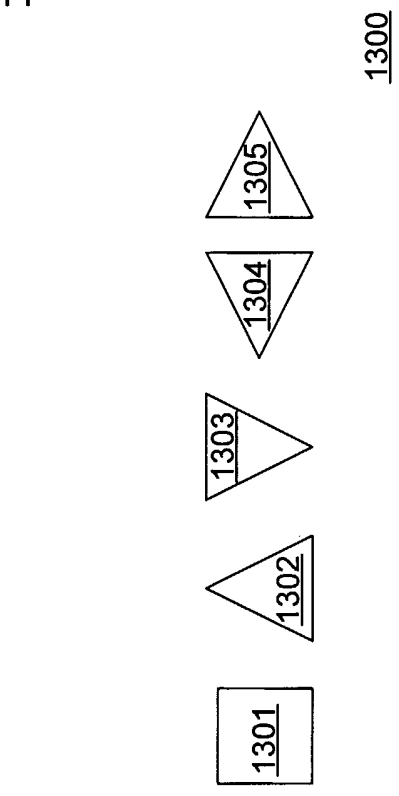

FIG. 13

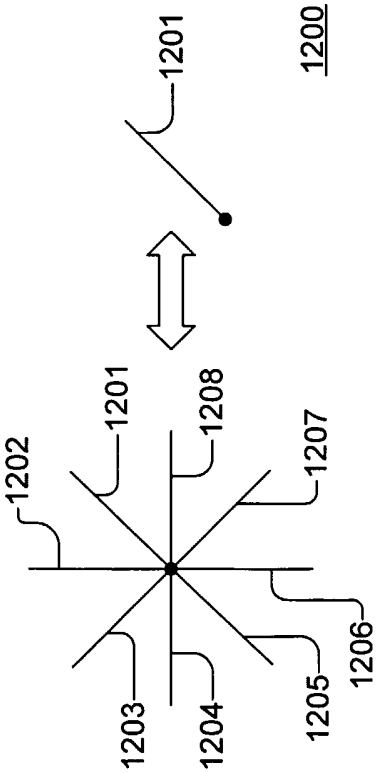

FIG. 12

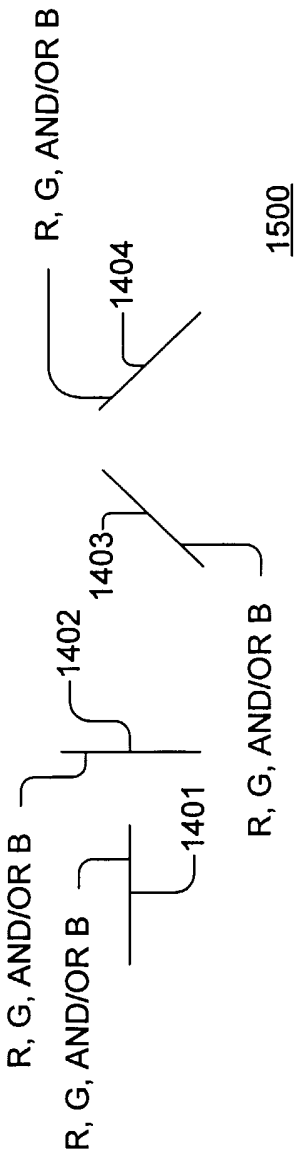

FIG. 15

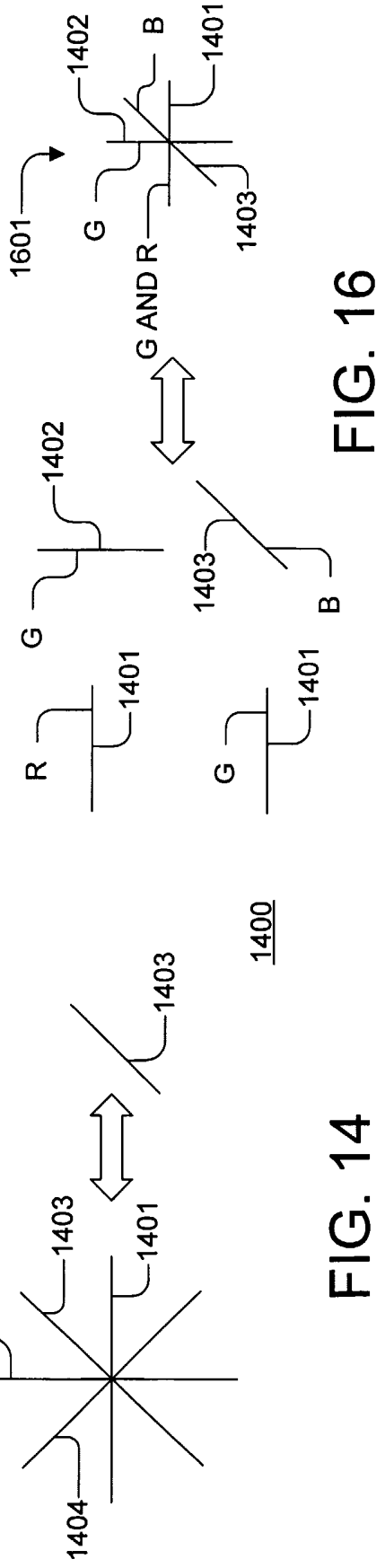

FIG. 16

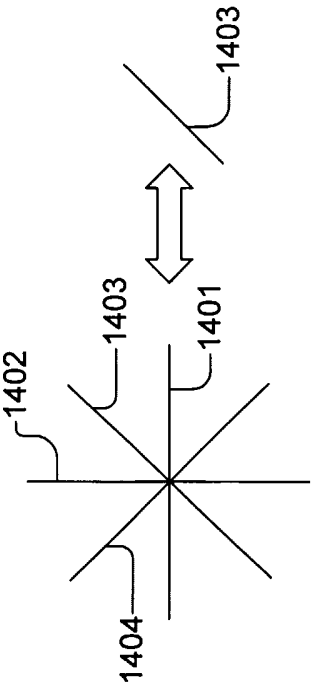

FIG. 14

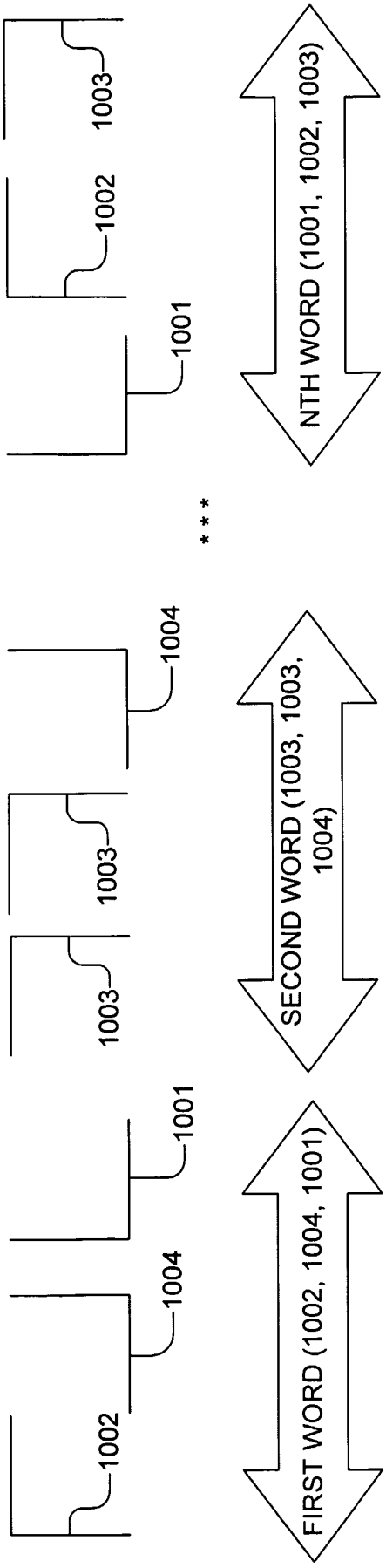
1002
1004
1001
1003
1003
1004
1003
1002
1001
FIRST WORD (1002, 1004, 1001)
SECOND WORD (1003, 1003, 1004)
NTH WORD (1001, 1002, 1003)

FIG. 17

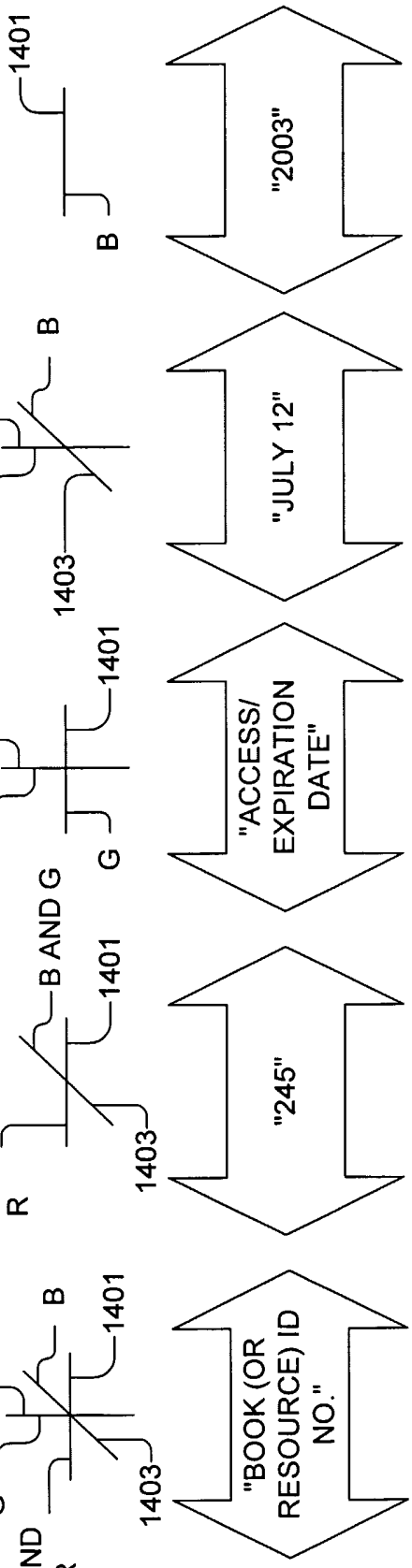
G AND R
1402
G
B
1401
1403
"BOOK (OR RESOURCE) ID NO."
G AND R
B AND G
1401
1403
"245"
B
1402
G
1401
"ACCESS/ EXPIRATION DATE"
R
1402
B
1403
"JULY 12"
1401
B
"2003"

FIG. 18

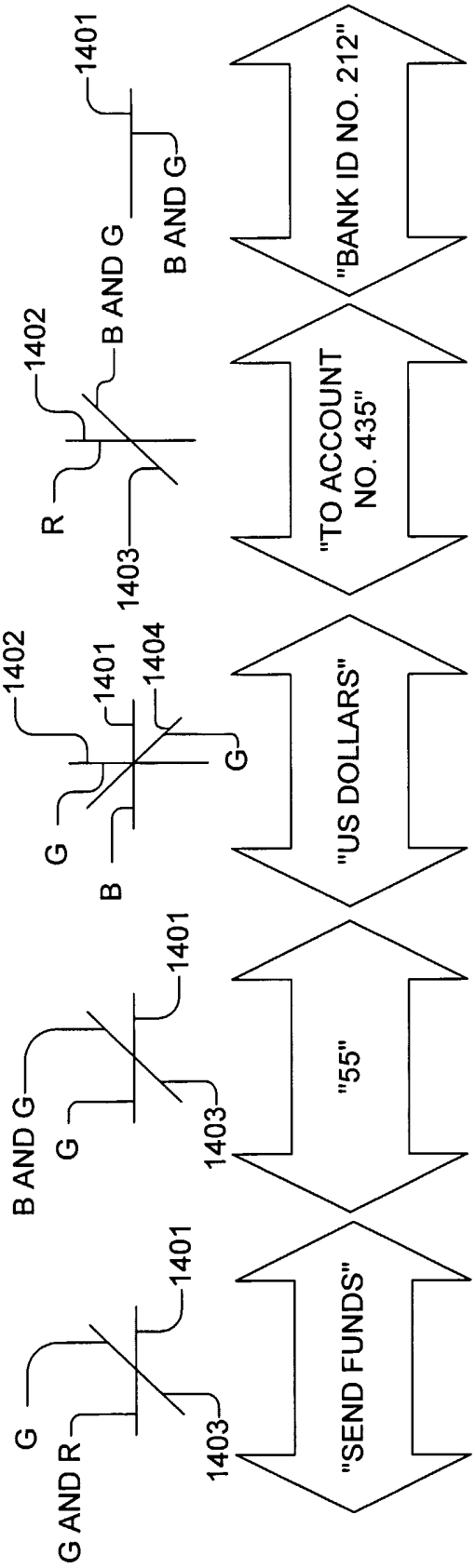
G AND R
G
1403
1401
"SEND FUNDS"
B AND G
G
1403
1401
"55"
G
B
1402
1401
1404
G
"US DOLLARS"
R
1403
1402
B AND G
1401
B AND G
"TO ACCOUNT NO. 435"
"BANK ID NO. 212"

FIG. 19

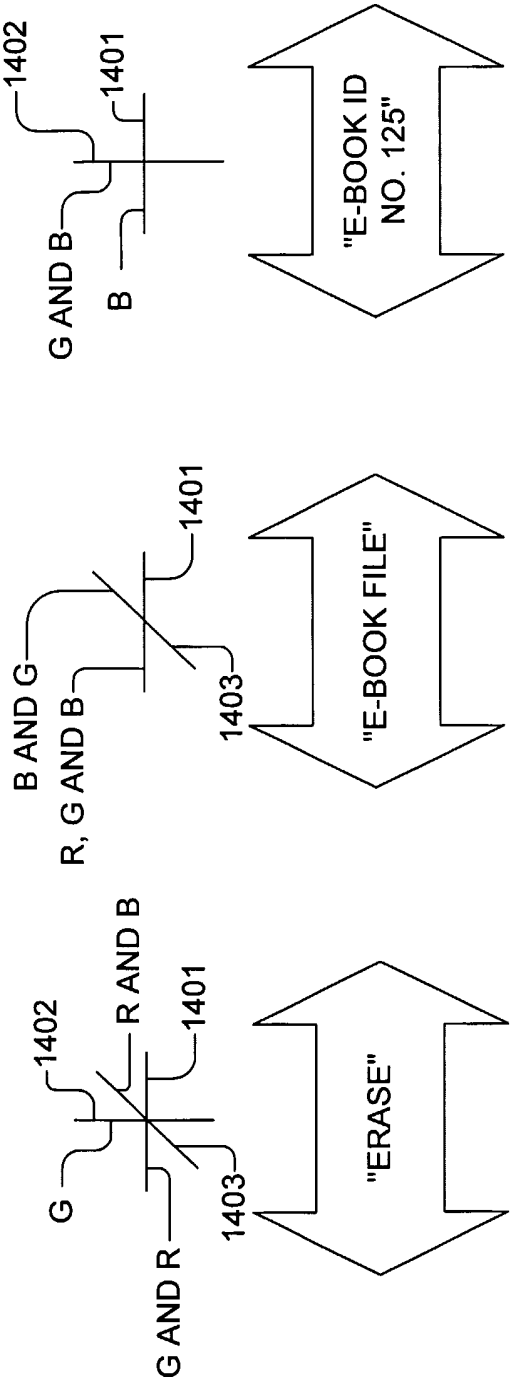
G AND R
G
1403
1402
R AND B
1401
"ERASE"
R, G AND B
B AND G
1403
1401
"E-BOOK FILE"
G AND B
B
1402
1401
"E-BOOK ID NO. 125"

FIG. 20

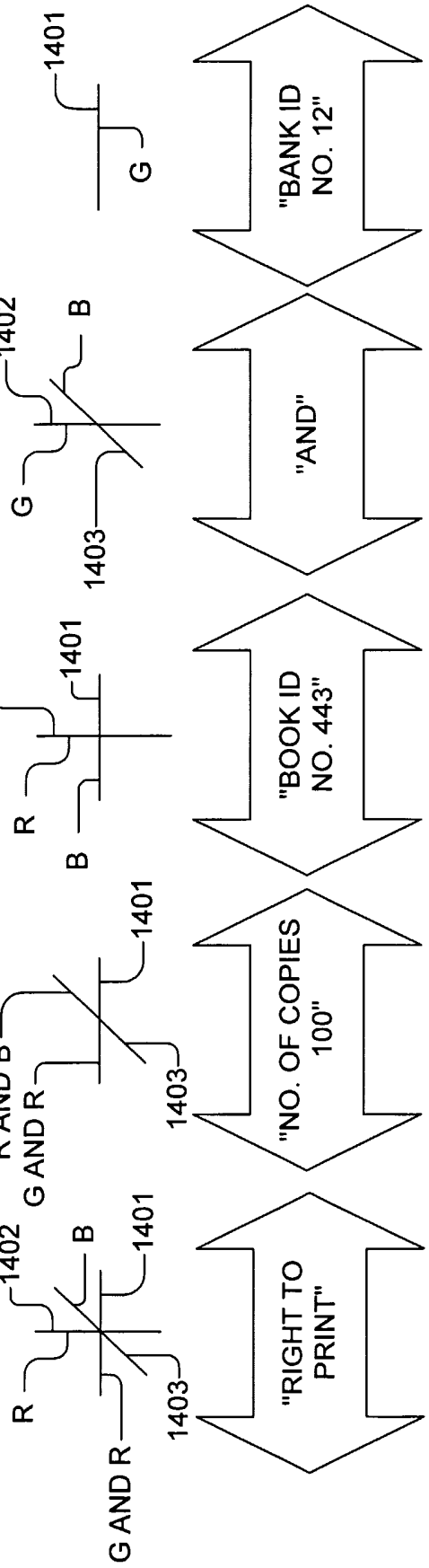
"RIGHT TO PRINT"
"NO. OF COPIES 100"
"BOOK ID NO. 443"
"AND"
"BANK ID NO. 12"
R
G AND R
B
R AND B
G AND R
G
B
1401
1402
1403

FIG. 21

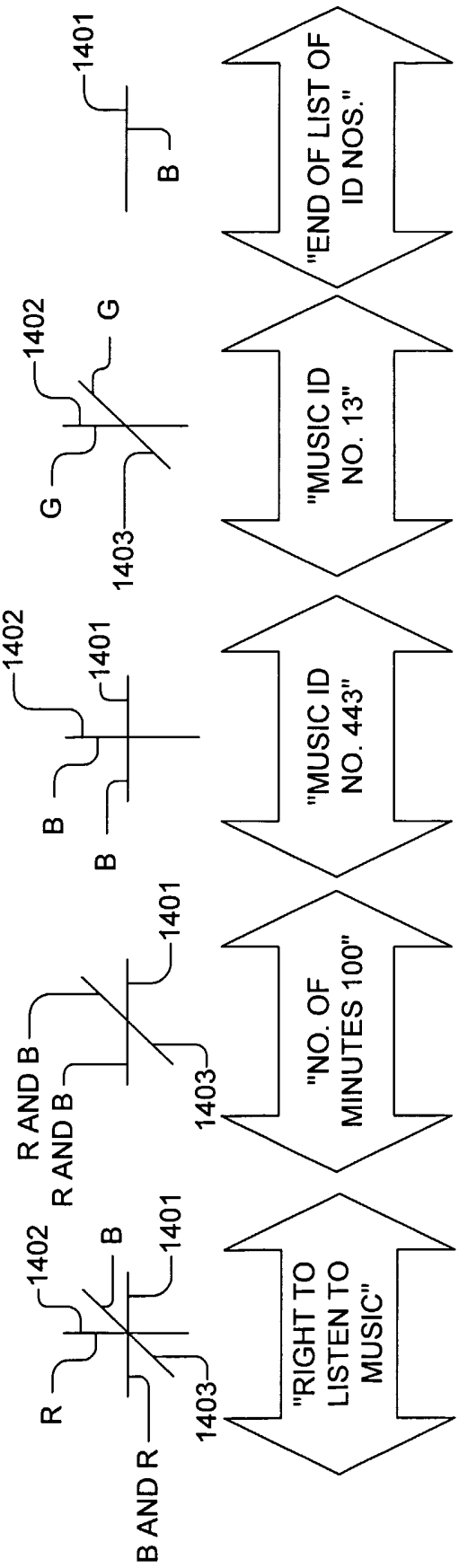
"RIGHT TO LISTEN TO MUSIC"
"NO. OF MINUTES 100"
"MUSIC ID NO. 443"
"MUSIC ID NO. 13"
"END OF LIST OF ID NOS."
R
B AND R
B
R AND B
R AND B
G
B
1401
1402
1403

FIG. 22

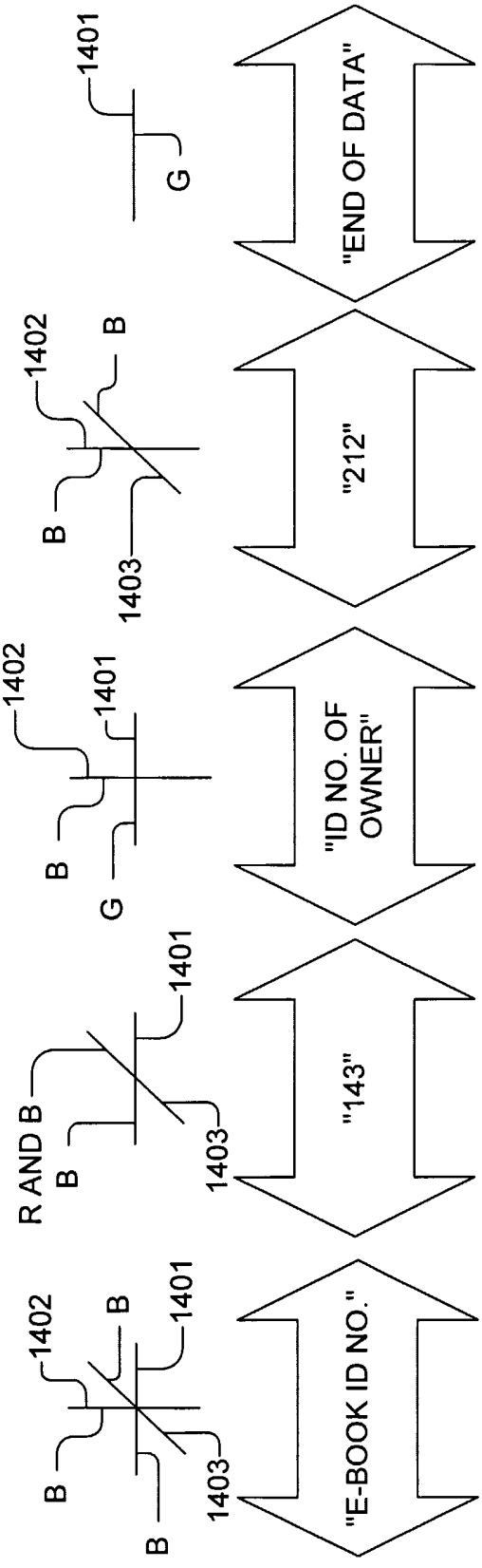
"E-BOOK ID NO."
"143"
"ID NO. OF OWNER"
"212"
"END OF DATA"
R AND B
B
G
1401
1402
1403

FIG. 23

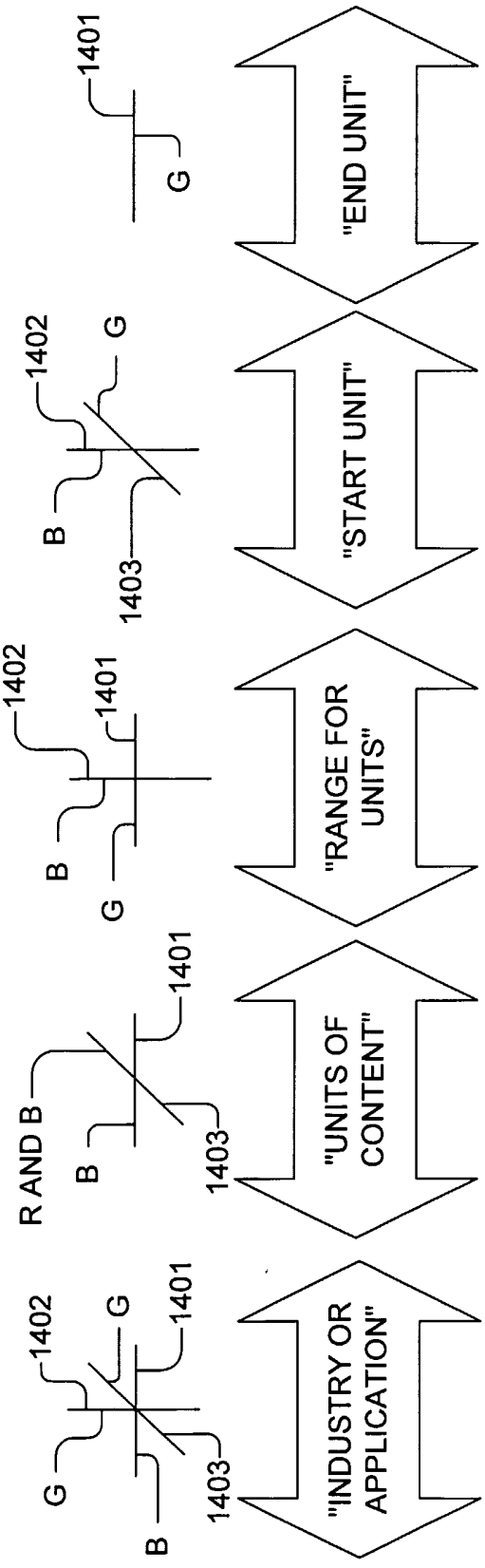
"INDUSTRY OR APPLICATION"
"UNITS OF CONTENT"
"RANGE FOR UNITS"
"START UNIT"
"END UNIT"
R AND B
B
G
1401
1402
1403

FIG. 24

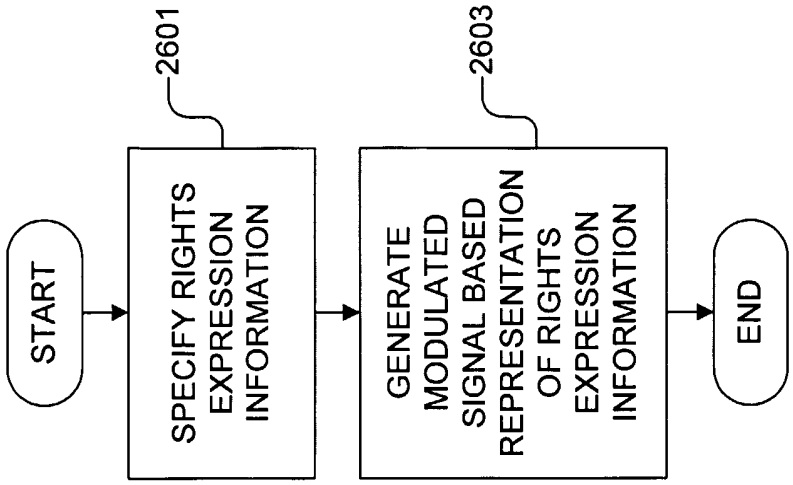
START
SPECIFY RIGHTS EXPRESSION INFORMATION
2601
GENERATE MODULATED SIGNAL BASED REPRESENTATION OF RIGHTS EXPRESSION INFORMATION
2603
END

FIG. 26

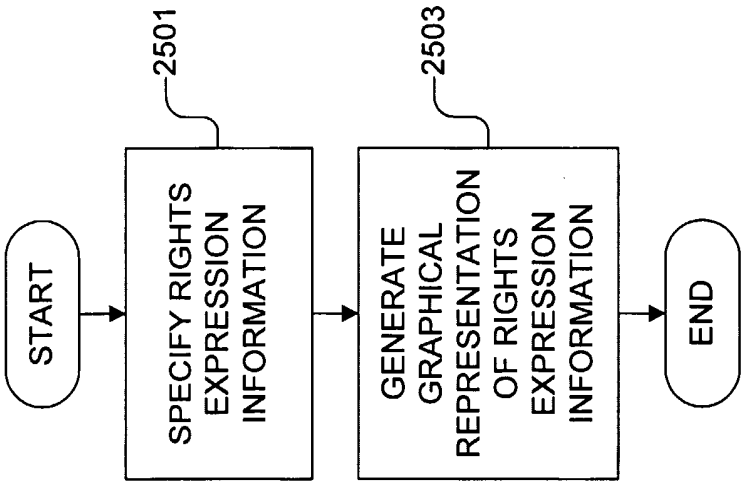
START
SPECIFY RIGHTS EXPRESSION INFORMATION
2501
GENERATE GRAPHICAL REPRESENTATION OF RIGHTS EXPRESSION INFORMATION
2503
END

FIG. 25