April 1, 1947. F. E. RUNGE 2,418,317

ELECTRONIC GUN ADJUSTMENT

Filed April 27, 1944 3 Sheets-Sheet 1

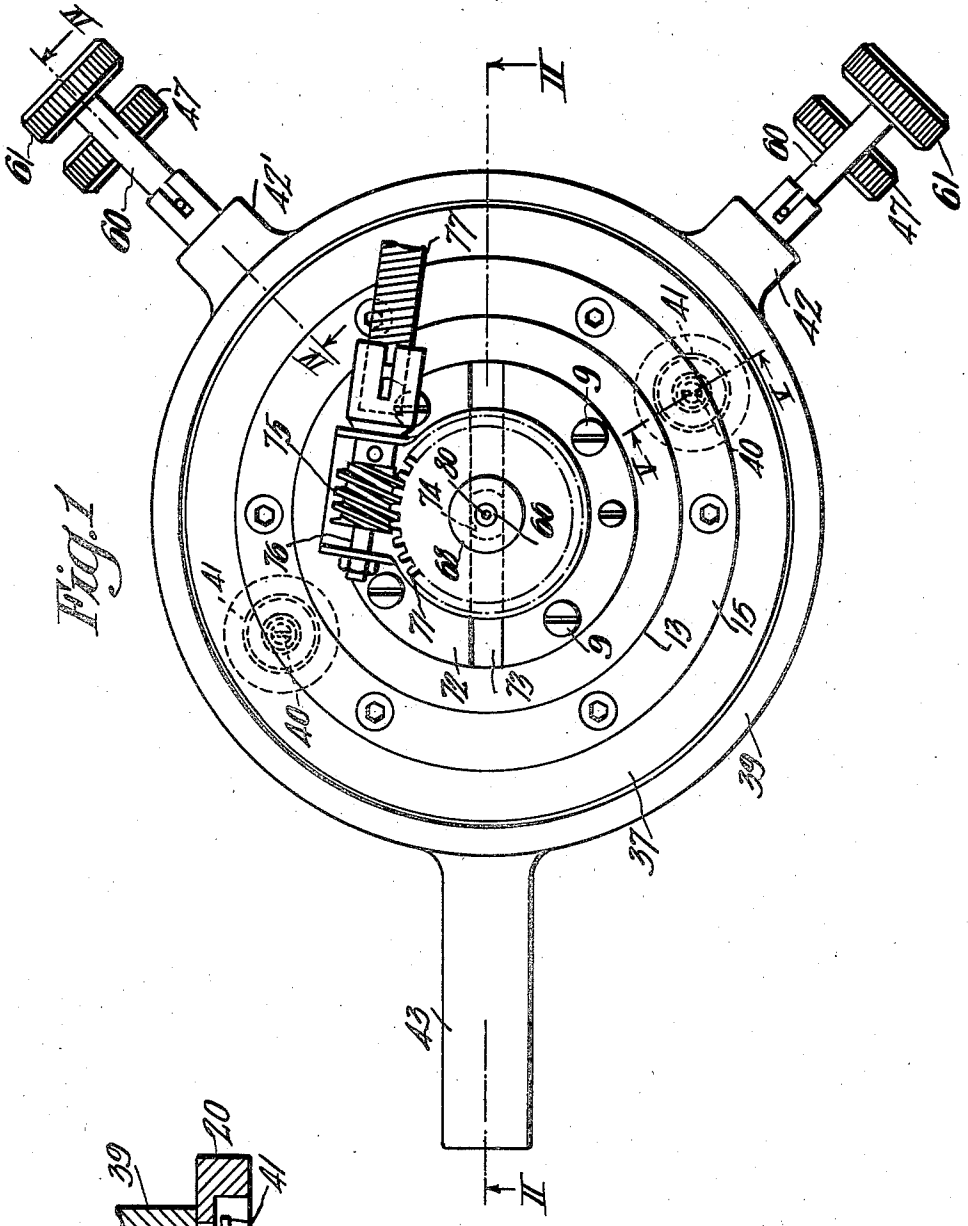

Fig. 1

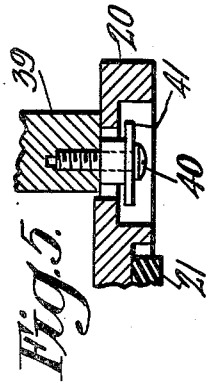

Fig. 5.

INVENTOR.
Frank E. Runge
BY C. D. Ruska
ATTORNEY

April 1, 1947. F. E. RUNGE 2,418,317

ELECTRONIC GUN ADJUSTMENT

Filed April 27, 1944 3 Sheets-Sheet 2

Fig. 2.

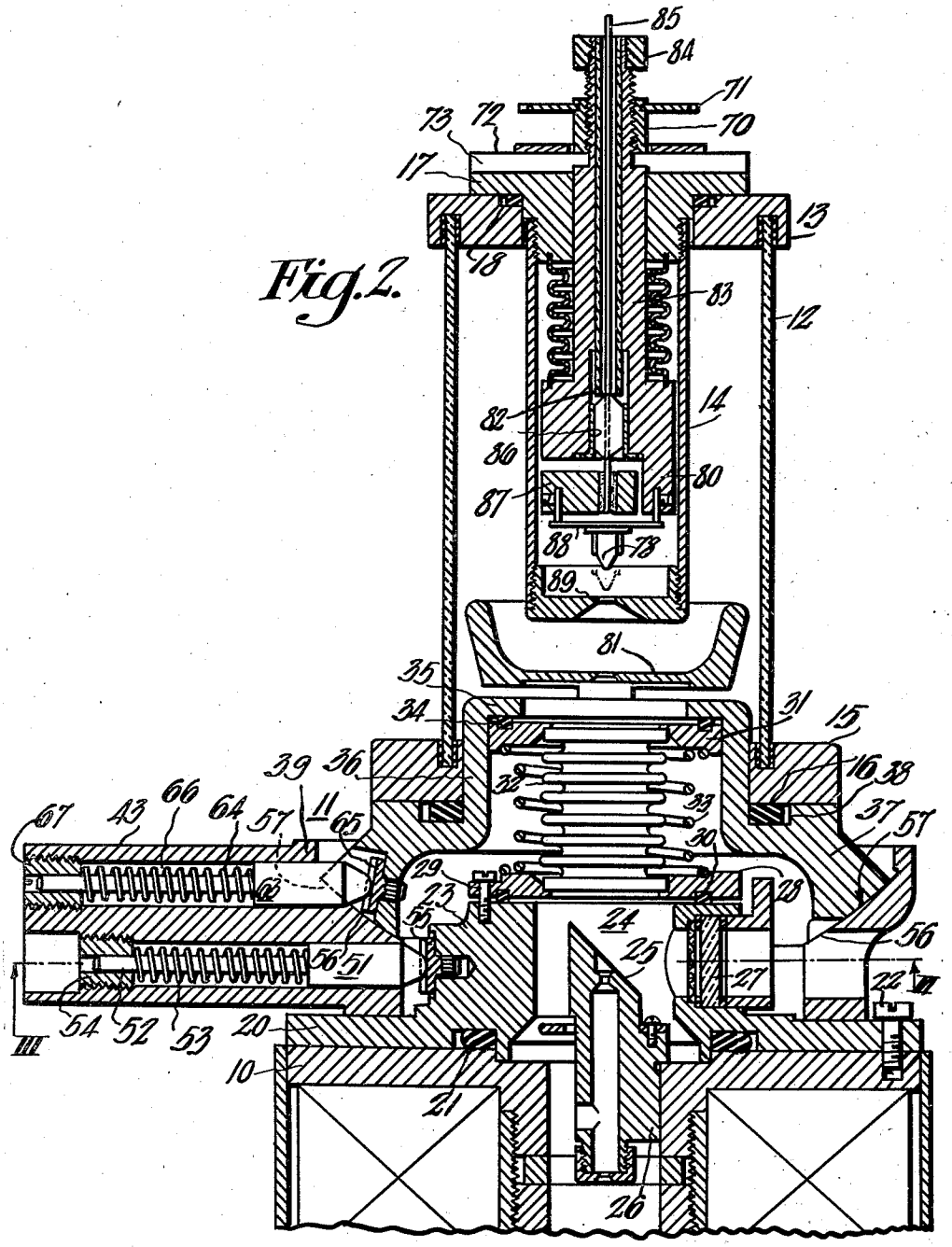

INVENTOR.
Frank E. Runge
BY
C. D. Fuska
ATTORNEY

April 1, 1947. F. E. RUNGE 2,418,317

ELECTRONIC GUN ADJUSTMENT

Filed April 27, 1944 3 Sheets-Sheet 3

Fig. 3

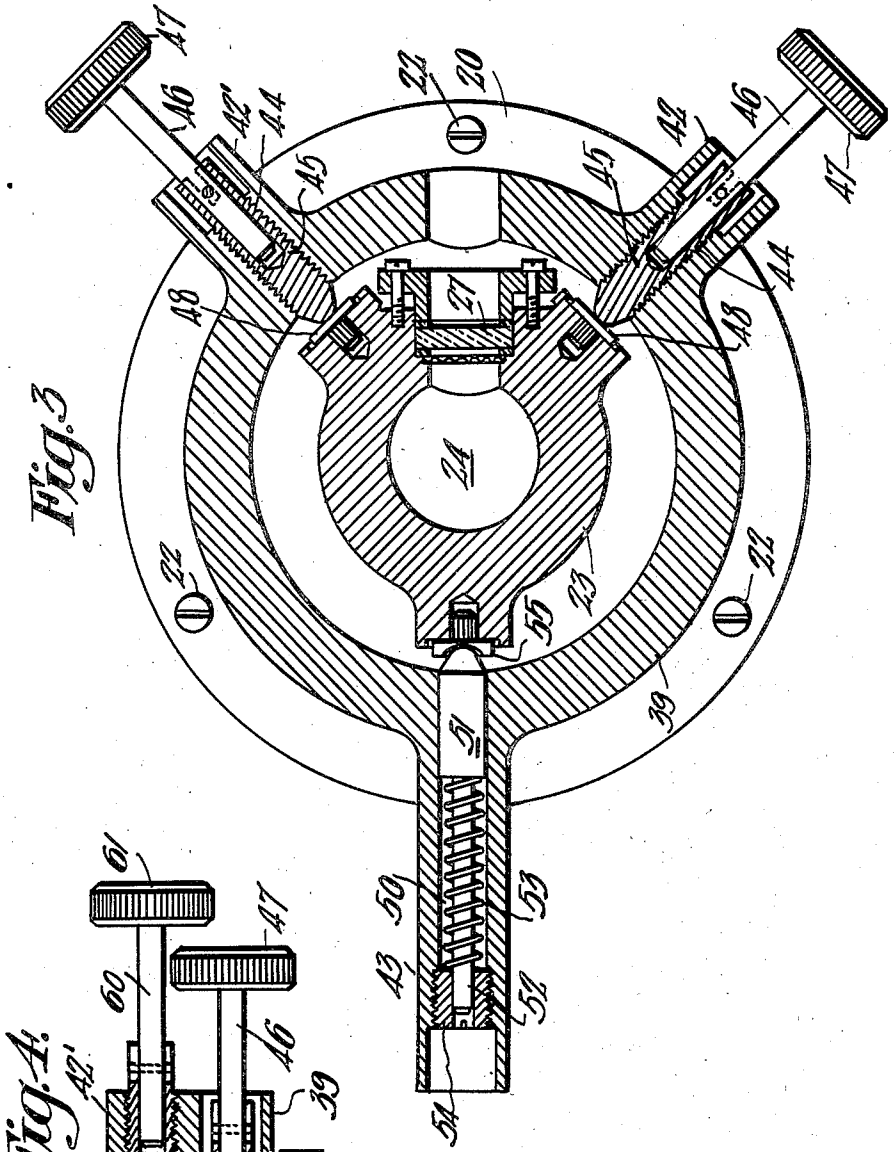

Fig. 4.

INVENTOR.
Frank E. Runge
BY C. D. Ruska
ATTORNEY

Patented Apr. 1, 1947

2,418,317

UNITED STATES PATENT OFFICE

2,418,317

ELECTRONIC GUN ADJUSTMENT

Frank E. Runge, Haddon Heights, N. J., assignor to Radio Corporation of America, a corporation of Delaware

Application April 27, 1944, Serial No. 533,073

7 Claims. (Cl. 250—49.5)

1

The present invention relates to electronic devices such as electron microscopes and more particularly to adjustments of the electron gun or source of the electron beam.

In adjustments of the character here under consideration it has heretofore been customary to shift the gun and its associated parts laterally by thrust screws acting through the gun support against alined or diametrically opposed biasing springs. Such arrangements require four points of contact, two by thrust screws and two by biasing springs and while capable of making a desired adjustment, fail to make any provision to prevent spurious movements of the parts during alinement of the gun. This is due to the fact that two biasing springs of necessity must be adjacent to each other and hence the gun or its support has no positive means to react against and thus prevent these disturbing movements.

Some of the objects of the present invention are: to provide an improved adjusting means for an electronic gun; to provide means for adjusting the radiating mechanism of an electronic microscope to bring the electron beam into coincidence with the optical axis of the condensing lens of the instrument; to provide a positive mechanism for tilting an electron gun or radiating mechanism relative to the axis of the electronic lenses; to provide a positive mechanism for shifting an electron gun transversely to the axis of the system for purposes of exact adjustment; to provide means in an electron microscope for adjusting the electron beam in such a manner that spurious movements of the parts during operation of the microscope cannot take place; to provide a novel pivotal control functioning in association with an adjustment for an electron beam; and to provide other improvements as will hereinafter appear.

In the accompanying drawings, Fig. 1 represents a plan of an electron gun embodying one form of the present invention; Fig. 2 represents a section on line II—II of Fig. 1; Fig. 3 represents a section on line III—III of Fig. 2; Fig. 4 represents a detail section on line IV—IV of Fig. 1; and Fig. 5 represents a section on line V—V of Fig. 1.

Referring to the drawings one form of the present invention is shown as assembled in the gun end of an electron microscope. The parts shown are those forming the portion of the column including the condenser lens frame 10, a superposed adjustable unit 11 and glass or other insulated support 12. The support 12 is closed at the upper end by an annular head 13 from

2

which the electronic gun 14 is held coaxially within the insulated support 12, while at the lower end the support 12 seats upon an annular ring 15 seating on the unit 11 with an interposed gasket 16 for sealing purposes. The gun 14 has a flanged base 17 seating on the head 13 with an interposed gasket 18 for sealing purposes, and compressed under the tension of screws 9.

The adjustable unit 11 is formed of an annular base or stage 20 seated upon the lens frame 10 and including a gasket 21 for sealing the joint between these parts. Screws 22 or other fastening means are employed to prevent displacement of the base 20. The base 20 is formed with an upstanding centrally located hub 23 forming a chamber 24, coaxially of the column and gun 14, in which the inclined fluorescent face 25 of the aperture member 26 is located. A window 27 is provided in the side of the hub 23 for registry with the face 25 so that the projected beam can be observed for adjustment purposes. This hub 23 serves to support a flexible bellows element comprising a bottom head 28, a top head 31, an interposed bellows 32 and a compression spring 33. The head 28 is attached to the hub 23 by screws 29 or the like, while a gasket 30 is interposed between the parts for sealing purposes. The spring 33 presses a gasket 34 against an inturned annular flange 35 on the hub 36 of an inverted cup-shaped member 37, which forms the upper movable portion of the unit 11. This member 37 is provided with a groove 38 to receive the gasket 16.

For adjusting the member 37 laterally, that is transversely with respect to the axis of the column, a ring 39 of larger internal diameter than the hub 23 encircles the hub 23 and is seated upon the base 20. It is preferable to provide at least two safety screws 40 for holding the ring 39 in approximate contact with the base 20. A clearance is provided in the base 20 to permit the required relative movement of the ring 39, and the clamping action of the screws 40 is obtained by a washer 41 bridging such clearance, as will be seen in Fig. 5. Projecting radially outward from the periphery of the ring 39 are three tubular bosses 42, 42' and 43, the bosses 42 and 42' being 90° apart and the boss 43 being 135° from both the bosses 42 and 42'. The two bosses 42 and 42' are provided with like cooperating parts as shown in Fig. 3, the same consisting of a radially disposed internally threaded hole 44 which receives an externally threaded plunger 45 having a connected removable keyed stem 46 protruding from the ring 39 to terminate

in a knurled head 47 for operating purposes. The inner end of the plunger 45 is alined with and is arranged to bear against a hardened steel anvil 48 fixed as an insert upon the side of the hub 23. The boss 43 is provided with a radially disposed hole 50 which receives a plunger 51 having a stem 52 of reduced diameter to accommodate an encircling compression biasing spring 53. An externally threaded bushing 54 is threaded into the outer end of the hole 50 to form an abutment maintaining the spring 53 under such compression as will project the plunger 51 into contact with an alined hardened steel vertically grooved anvil 55 on the side of the hub 23. The bushing 54 forms a bearing guide for the outer end of the plunger 51. Also the exposed end of the bushing 54 is slotted or otherwise shaped for turning movement when engaged by a suitable implement, such as a screw driver. From the foregoing it will be seen that the plunger 51 bearing against the anvil 55 forms a pivot about which the base 20 can swing when pressure is applied to either side of the base 20 by one or the other of the adjusting plungers 45. Thus to move the gun 14 in a plane normal to the electron beam to bring about coincidence of the beam and the optical axis of the magnifying system, the plunger 45, which will give the required movement is screwed in and since pivot 51 is yieldable the assembly has a combined lateral and angular motion which is positive and not susceptible to other movements of a spurious nature which ordinarily creep in where direct line thrust is depended upon for adjustment. In this way spurious movements, ordinarily present where biasing springs are opposite to but alined with adjusting plungers, are entirely eliminated.

In order to adjust the gun 14 angularly to bring about coincidence between the electron beam and the optical axis of the magnifying system, the upper portion of the ring 39 is formed as a depressed spherical face 56, which serves as a seat for a complemental face 57 on the bottom portion of the member 37. The member 37 is given an accurate movement by one or the other of two plungers 58 threaded respectively into the bosses 42 and 42' in superposed relation to the plungers 45. Each plunger 58 is arranged to be turned for feeding movement by its removable keyed stem 60 which projects exteriorly of the boss and carries an operating knurled head 61. The inner ends of the respective plungers 58 bear against hardened steel anvils 62 inserted in the juxtaposed face of the member 37. The thrust of the member 37 is taken by a plunger 63 biased by a compression spring 64 against a hardened steel vertically grooved anvil 65 on the juxtaposed side of the member 37. The plunger 63 rides in a through hole 66 in the boss 43 located above the hole 50, and having a bushing 67 threaded into its outer end as a guide bearing for the stem of the plunger 63 and as a means to adjust the pressure of the biasing spring 64. The plunger 63 and the anvil 65 thus give a pivoted action about which the angular swing of the member 37 takes place.

From the foregoing it will be seen that if either of the adjusting plungers 45 are operated, the ring 39 will slide relative to the base 20 and thus carry the member 37 and the gun parts supported thereby laterally at right angles to the axis of the lens system. This sliding movement is under the control of the biasing pivot 51 so that the lateral travel is accompanied by a relatively

minute arcuate swing of the parts about the pivot 51 as a center. Furthermore, if one or the other of the plungers 58 is operated, the lateral thrust causes the member 37 to react against the pivot plunger 63 and thereby bring about through a spherical movement, the desired angular movement which tilts the gun with respect to the axis of the condensing lens. In both adjustments there is a three-point contact with the parts which serves to resist and eliminate all anomalous movements which for some unexplainable reason ordinarily develope during adjustments of this kind.

While the adjustments described pertain particularly to shifting the gun assembly relative to the axis of the lens system, the invention comprehends also a novel means for adjusting the cathode or heater 78 with respect to the anode 81. In the preferred form the cathode assembly includes an insulating tube 82, fitted within and projecting from a sleeve 83, which sleeve terminates in a removable head 84 which functions as a stop. The stop 84 prevents damage to filament 78 when sleeve 83 is adjusted to its extreme lower position and to thus prevent interference of the filament 78 with the aperture 89. This projecting portion of the sleeve 83 is externally threaded to receive a hub 70 of a gear 71. Also attached to the hub 70 is a disc 72 having a transverse slot 73 which serves to prevent rotation of the sleeve 83 when the gear 71 is given a rotary motion while transmitting axial movement to the sleeve 83. This action is made possible by providing the coacting part of the sleeve 83 with parallel side flats 74. The gear 71 is in mesh with a worm gear 75 keyed to a shaft 76 as an extension of an insulated and removable shaft 77 leading to a convenient location for remote control. It will thus be seen, by operating the remote control to turn the gear 71, that the sleeve can be axially raised or lowered to adjust the filament 78 with respect to the anode 81. Thus, in addition to a means for adjusting the beam laterally with respect to the axis of the system and means for adjusting the beam angularly with respect to the axis, there is a third adjustment to correlate properly the cathode filament and the anode. The cathode is energized by current supplied by the conductor 85 which leads through the tube 82, the glass seal 86, and terminates in the spaced terminal block 87, in which block the one side of the filament holder 88 is removably mounted. The other side of the holder 88 is removably mounted in the block 80 which forms the return connection.

I claim as my invention:

1. In an electron microscope having a column to be evacuated and an electron lens system, the combination of an electron gun for discharging a beam of electrons into said column, an annular unit mounted for movement transverse to the axis of said system, two independently operable thrust plungers engaging said unit at spaced locations at one side of said unit, and a spring biased pivot angularly disposed to said plungers and engaging the opposite side of said unit to oppose the thrust of either plunger, the relation of said pivot to both plungers being such that the thrust of either plunger causes said unit to swing on an arc transversely of the column about said pivot as a center.

2. In an electron microscope, the combination of an electron gun, an adjustable unit supporting said gun and forming a portion of the microscope column, a frame supporting said unit and

forming a continuation of said column, means including two independently operable plungers for shifting said unit relative to said frame and transversely with respect to the axis of said column, and a yieldable pivot opposing the thrust of either plunger but out of alinement with both plungers, whereby said unit can be swung on an arc to adjust the optical axis to the electron beam and anomalous movements be prevented during adjustments.

3. In an electron microscope, the combination of an electron gun, an adjustable unit supporting said gun and forming a portion of the microscope column, a frame supporting said unit and forming a continuation of said column, abutment means including a yieldable pivot engaging one side of said unit, and adjustable thrust means engaging said unit in opposed angular relation to said pivot for tilting said unit with respect to the axis of said column, whereby said unit is positively controlled and anomalous movements prevented during adjustments.

4. In an electron microscope, a column having as alined portions thereof an annular frame and an annular base, a hub on said base, a ring encircling said hub but out of contact therewith and slidably mounted upon said base, an electron gun supported on said ring for lateral movement therewith and coaxially alined with said column, two thrust plungers axially adjustable through said ring for radial contact with said hub at the same side of the median plane thereof, and a spring biased plunger slidable in said ring for radial contact with said hub at the opposite side of said plane to form a laterally fixed pivot about which said ring swings on an arc when either thrust plunger thrusts against said hub, whereby said column can be laterally adjusted.

5. In an electron microscope, a column having as alined portions thereof an annular frame and an annular base, a ring slidably mounted on said base and having an arcuate concave upper face, an annular member having a lower face seated on said ring face and of complemental contour, an electron gun supported by said member for coaxial alinement with said column, two thrust

plungers axially adjustable through said ring for contact with said member at the same side of the medial plane thereof, and a spring biased plunger slidable in said ring to contact said member at the opposite side of said plane to form a laterally fixed pivot about which said member swings when either thrust plunger thrusts against said member, whereby said arcuate faces impart a tilt to said member and gun.

6. In an electron microscope having a column to be evacuated and an electron lens system, the combination of an electron gun for discharging a beam of electrons into said column, an annular unit mounted for movement transverse to the axis of said system to adjust said unit with respect to said axis, and means for simultaneously moving said unit linearly and rotatively transversely of the column.

7. In an electron microscope having a column to be evacuated and an electron lens system, the combination of an electron gun for discharging a beam of electrons into said column, an annular unit mounted for movement transverse to the axis of said system to adjust said unit with respect to said axis, and means for moving said unit linearly and rotatatively transversely of the column.

FRANK E. RUNGE.

REFERENCES CITED

The following references are of record in the file of this patent:

UNITED STATES PATENTS

Number	Name	Date
2,305,458	Ruska et al.	Dec. 15, 1942
2,277,024	Ruska et al.	Mar. 17, 1942
2,220,973	Marton	Nov. 12, 1940
2,266,717	Von Borries et al.	Dec. 16, 1941
2,086,546	George	July 13, 1937
2,208,406	Benedict	July 16, 1940
2,268,539	Von Borries et al.	Dec. 30, 1941

OTHER REFERENCES

Zworykin and Morton, "Applied Electron Optics," pages 182, 183 of J. O. S. A., April 1936, 250–49.5.