Jan. 10, 1950 H. B. KAUFFMAN 2,494,045

COMBINATION HIGH CHAIR

Filed March 18, 1946 3 Sheets-Sheet 1

Fig. 5.

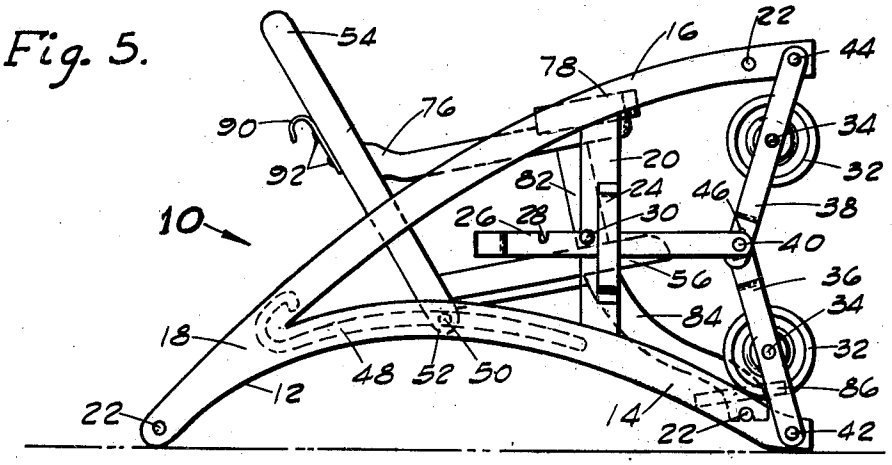

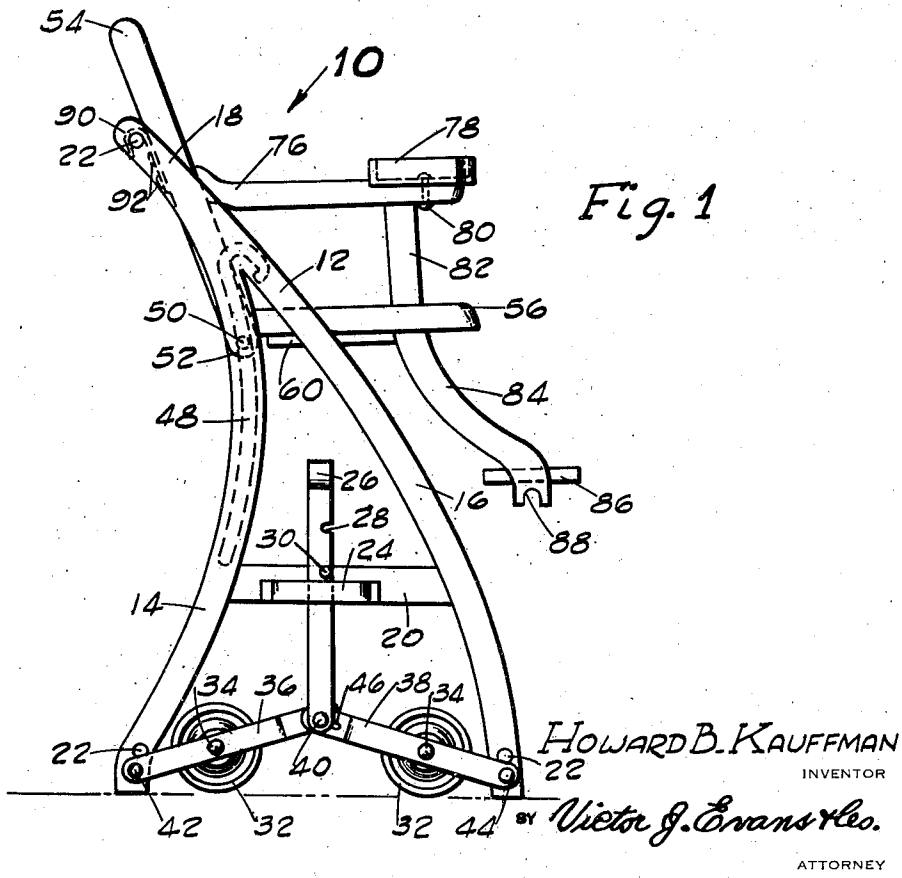

Fig. 1

HOWARD B. KAUFFMAN
INVENTOR

BY Victor J. Evans & Co.
ATTORNEY

Jan. 10, 1950 H. B. KAUFFMAN 2,494,045

COMBINATION HIGH CHAIR

Filed March 18, 1946 3 Sheets-Sheet 2

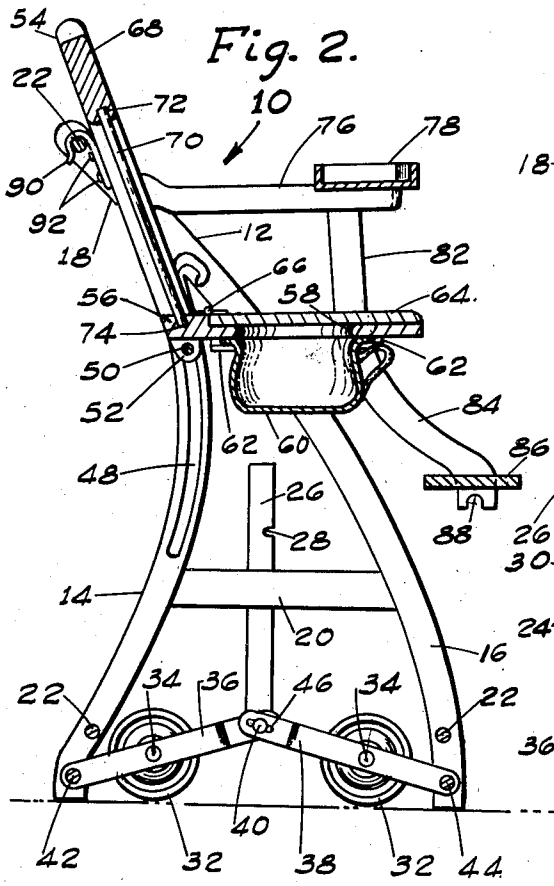

Fig. 2.

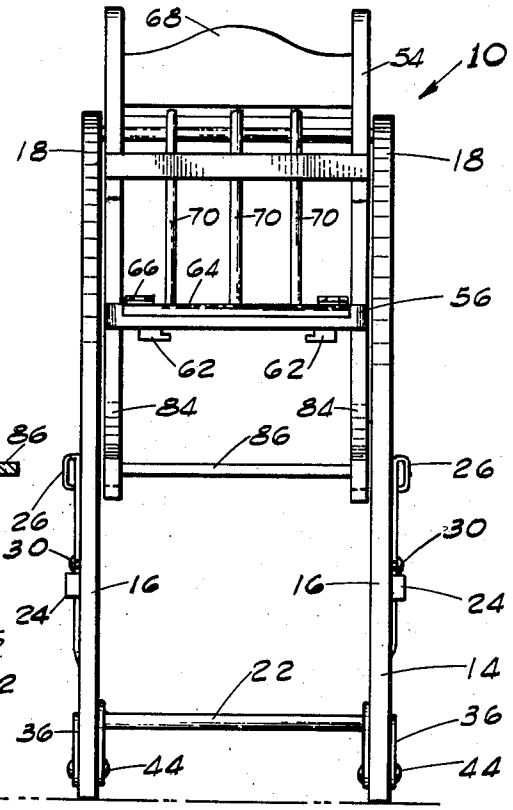

Fig. 3.

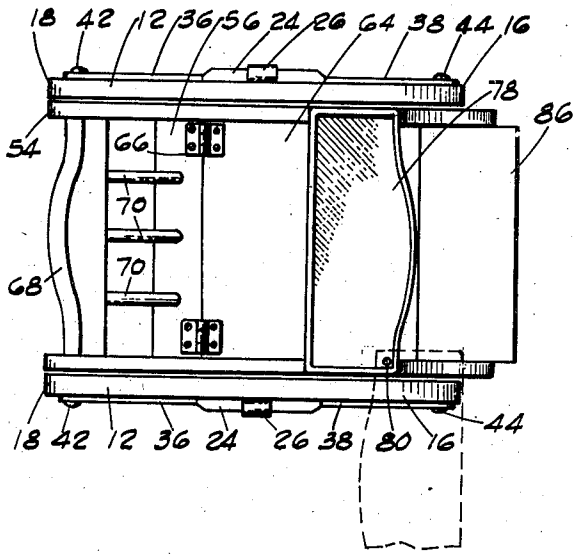

Fig. 4.

HOWARD B. KAUFFMAN.
INVENTOR

BY Victor J. Evans & Co.
ATTORNEY

COMBINATION HIGH CHAIR

Filed March 18, 1946 3 Sheets-Sheet 3

Fig. 6.

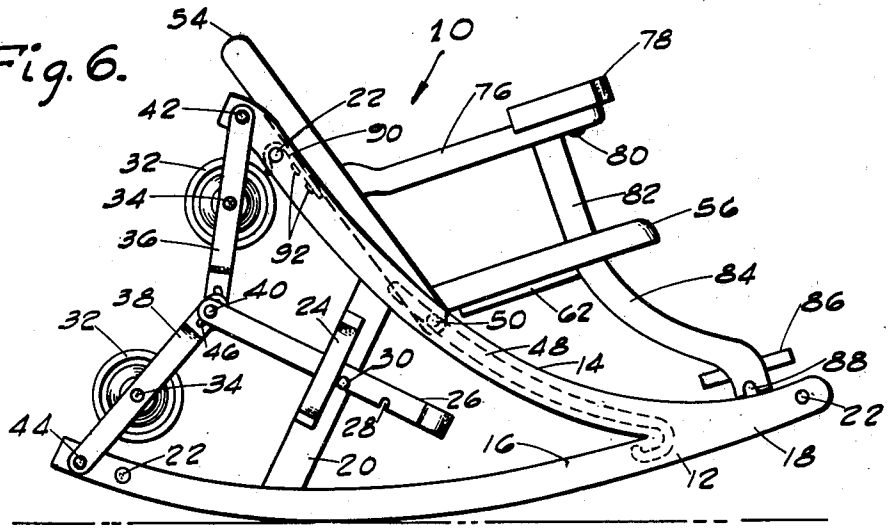

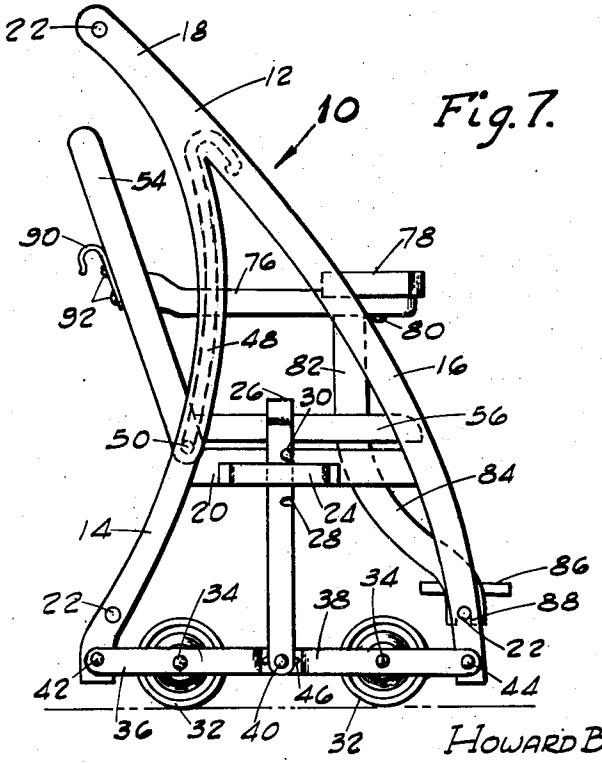

Fig. 7.

HOWARD B. KAUFFMAN
INVENTOR

BY Victor J. Evans & Co.
ATTORNEY

Patented Jan. 10, 1950

2,494,045

UNITED STATES PATENT OFFICE

2,494,045

COMBINATION HIGH CHAIR

Howard B. Kauffman, Cuyahoga Falls, Ohio

Application March 18, 1946, Serial No. 655,113

4 Claims. (Cl. 155—38)

1

This invention relates to an improved combination high chair which can be changed for use as a high or low chair, play chair gocart or rocking chair.

An object of this invention therefore is to provide a chair that is simple in construction thereby permitting the conversion thereof to chairs of various shapes and sizes in an efficient and rapid manner.

Another object of the invention is to provide a chair that is inexpensive to manufacture, durable in use and will by its various changes eliminate the need of more than one article of furniture.

With the above and other objects in view the invention consists of the novel details of construction, arrangement and combination of parts more fully hereinafter described, claimed, and illustrated in the accompanying drawings in which:

Figure 1 is an elevational view of an embodiment of the invention in use as a high chair.

Figure 2 is a vertical sectional view thereof.

Figure 3 is a rear view thereof.

Figure 4 is a top plan view thereof.

Figure 5 is an elevational view in the form of a play chair.

Figure 6 is an elevational view in the form of a rocking chair and

Figure 7 is an elevational view in the form of a gocart.

Referring more in detail to the drawings the reference numeral **10** designates the chair which consists of the side frames **12** comprising the arcuate portions **14** and **16** which form a triangle and therefore are joined at the apex **18**.

Extending at approximately right angles to the portions **14** and **16** and joined thereto near the lower ends thereof is the cross brace **20** and the ends of the side frames **12** are spaced apart but joined together by the rungs **22**.

The brace **20** has secured thereto at the center thereof a hanger **24** in which is slidably mounted a bar **26** having notches **28** therein along one edge thereof to engage the studs **30** whereby the movement of the bar **26** may be adjusted to move the wheels **32** rotatably mounted at **34** to links **36** and **38** respectively into and out of rolling contact with the floor or similar surface as shown in Figures 1 and 7.

Links **36** and **38** are pivoted together at one end and to the lower end of the bar **26** at **40** and are pivoted at their opposite ends at **42** and **44** to portions **14** and **16** respectively and the links are provided with elongated slots **46** at the pivot point **40**.

2

The arcuate portion **14** is provided with the elongated arcuate and hook shaped slot **48** to receive the transverse rod **50** which is mounted in apertured ends **52** of the back rest frame **54** secured to the bottom of the seat frame **56**. The seat frame **56** is provided with a central opening **58** adapted to communicate with a baby's chamber **60** retained on the frame **56** by slides **62** and a cover **64** hinged to the frame **56** at **66** provides the seat for the occupant of the chair.

The frame **54** has the head rest **68** and vertical slats **70** inserted in notches **72** in the head rest and notches **74** in the seat frame and arm rests **76** having the tray **78** pivotally secured at the outer ends of one of the arm rests by a fastener **80** are secured to the frame **54** and uprights **82** support the outer ends of the arm rests **76**. The uprights **82** have the arcuate lower portions **84** to support the foot rest **86** and the portions are notched at **88** on their free ends to engage the rungs **22** as shown in Figures 5 and 7 or in any other position where such notches will engage the rungs.

The frame **54** has hooks **90** secured to the rear thereof by fasteners **92** and the hooks will engage the rung **22** as shown in Figures 1, 2, 7 and 9 or in any other position where such hooks will engage the rung.

In Figure 6, the chair is unhooked as in all instances, and the hook members **90** engage the rod **22** in the ends of the portion **14** to secure the back of the chair, the rod **50** entering the slot **48**.

By the construction shown and by means of the slots **48** the chair may be adjusted to the various shapes shown other shapes not illustrated may also be obtained such as a bed chair which would be formed by resting the portion **84** on the floor when in the form shown in Figure 5 moving the wheels to the position shown in Figure 7 and placing a board or similar stiffener on the seat frame **54**.

It is believed that the construction and operation of the chair will be apparent to those skilled in the art and it is to be understood that changes in the details of construction, arrangement and combination of parts may be resorted to without departing from the spirit of the invention and the scope of the appended claims.

Having thus described the invention what is claimed as new and desired to be secured by Letters Patent is:

1. A device of the character described, comprising a chair usable in various positions, comprising two arcuate shaped substantially triangular side frames, wheel means adjustably

mounted within said side frames, a back rest frame, a seat frame, means for securing said seat frame to said back rest frame, a transversely extending rod carried by said back rest frame for connecting said back rest frame to said side frames, and the rod on said back rest frame coacting with an elongated hooked-shaped slot in each of said side frames whereby back rest frame may be moved into various positions.

2. The invention as in claim 1, wherein said side frames are joined together at their ends by transverse rungs.

3. The invention as in claim 1, wherein means is provided for holding said back rest fixed in its various positions.

4. The invention as in claim 1 wherein means is provided for supporting the wheel adjusting means.

HOWARD B. KAUFFMAN.

REFERENCES CITED

The following references are of record in the file of this patent:

UNITED STATES PATENTS

Number	Name	Date
247,848	Odell	Oct. 4, 1881
252,431	Collignon	Jan. 17, 1882
287,721	Ranney	Oct. 30, 1883
325,999	Weisgerber	Sept. 8, 1885
331,748	Holden	Dec. 1, 1885
399,069	Odell	Mar. 5, 1889
443,128	Washburn	Dec. 23, 1890
572,271	Nelson	Dec. 1, 1896
1,359,671	Carlson	Nov. 23, 1920
1,427,795	Ernst	Sept. 5, 1922