June 11, 1935. A. PENN 2,004,417

AIR VOLUME CONTROLLING DEVICE FOR WATER STORAGE TANKS

Filed May 13, 1929

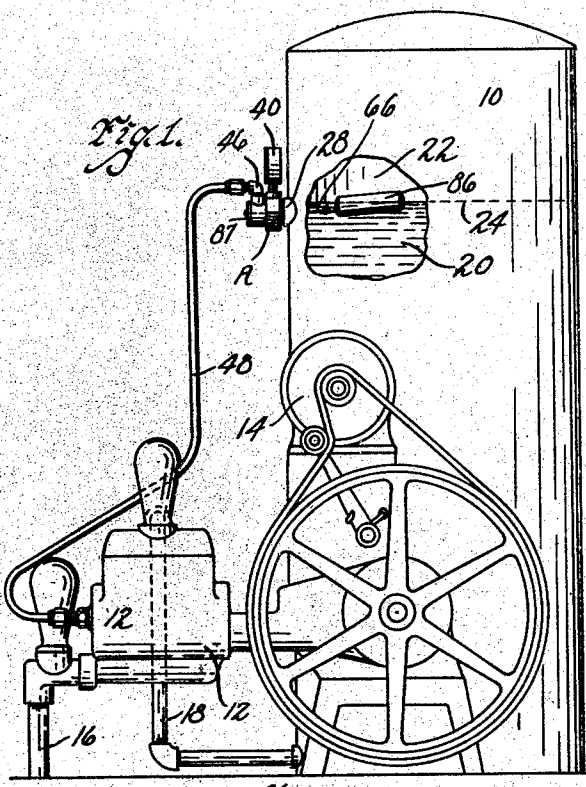

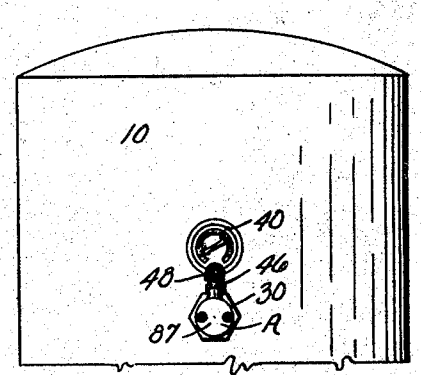

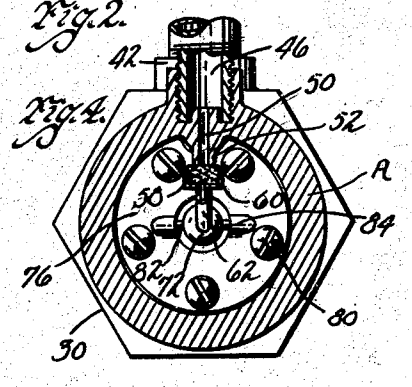

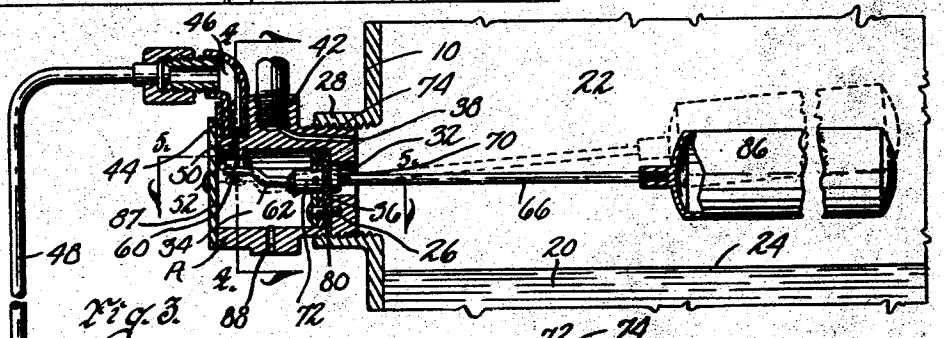

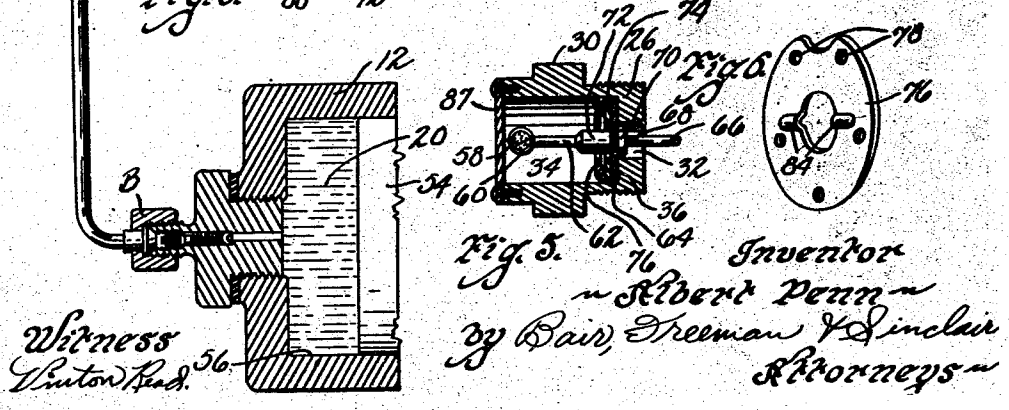

Witness
Linton Read.

Inventor
Robert Penn
by Bair, Freeman & Sinclair
Attorneys

Patented June 11, 1935 2,004,417

UNITED STATES PATENT OFFICE

2,004,417

AIR VOLUME CONTROLLING DEVICE FOR WATER STORAGE TANKS

Albert Penn, Des Moines, Iowa, assignor to Penn Electric Switch Co., a corporation of Iowa

Application May 13, 1929, Serial No. 362,620

4 Claims. (Cl. 251—31)

The object of my invention is to provide an air volume controlling device adapted for use in connection with water storage tanks for automatically controlling the height of water within the tank and at all times controlling the amount of air within the tank for proper and efficient operation of the water storage system, the parts being simple, durable and comparatively inexpensive in regard to cost of manufacture and installation.

It may be here mentioned that in connection with water storage systems, a certain amount of air is always discharged with the water and thus the air volume within the tank proper is decreased, unless some mechanism is provided for replenishing the air to the storage tank when it has been withdrawn therefrom, and it is my object to provide a device operable in connection with the water pump for forcing air into the tank whenever the volume thereof reaches a point less than the minimum required amount.

More particularly it is my object to provide a device of this character comprising a fitting adapted to be secured to a screw-threaded boss on the storage tank adjacent the point where the maximum water level is to be controlled and consisting of an air valve opened by a float whenever the water in the tank rises above the predetermined level, the valve being connected by a tube to the head of the water pump whereby air will be admitted through the pump to the tank as water is pumped therein.

Still a further object is to design my device whereby the parts projecting into the interior of the storage tank may be conveniently inserted through the opening in which the device is mounted whereby ease of attachment to the tank or removal therefrom is facilitated.

Still a further object is to provide a screw-threaded opening in the side of the tank which is adapted to be sealed by the air volume control device, parts of which project into the tank through the screw-threaded opening. The parts extending into the tank consisting of the float arm, float and the like are all of such size and shape as to project into the tank through the screw-threaded opening. The entire device forms a unitary structure adapted to be mounted directly upon the water storage tank which the device as a unit is adapted to operate with.

Still a further object is to provide a float device supported by a flexible plate or disc whereby a certain amount of pivotal movement of the float element is permitted for opening a valve element to atmosphere or closing the same when necessary, the flexible disc serving as a closure element for the portion of the tank through which the entire float device is mounted.

Another object is to provide a valve device of a unit construction adapted to be secured to a storage tank having a gauge thereon for indicating the pressure within the tank.

With these and other objects in view my invention consists in the construction, arrangement and combination of the various parts of my device, whereby the objects contemplated are attained, as hereinafter more fully set forth, pointed out in my claims and illustrated in the accompany drawing. Although, the invention is susceptible of a variety of embodiments, it is unnecessary to fully describe and illustrate more than one in order to give a full understanding of the invention both from its structural and functional standpoints. Accordingly, I have illustrated a preferred and desirable embodiment of the invention in the accompanying drawing, in which:

Figure 1 is a side elevation of a water storage tank, a water pump therefor, and my improved air controlling device mounted thereon.

Figure 2 is a front plan view of a portion of the storage tank with my device illustrated thereon.

Figure 3 is a central, vertical, sectional view through a portion of the tank, illustrating in detail my automatic air controlling device.

Figure 4 is a vertical, sectional view taken on the line 4—4 of Figure 3.

Figure 5 is a detail, horizontal, sectional view taken on the line 5—5 of Figure 3; and

Figure 6 is a perspective view of a plate forming a part of my controlling device.

In the accompanying drawing, I have used the reference numeral 10 to indicate generally a water storage tank which forms a part of a water supply system. A pump 12 is operated by a motor 14 for supplying water to the storage tank 10. The motor 14 is automatically regulated as to stopping and starting by a pressure control switch actuated by the pressure within the tank. This is of the ordinary construction now in use in connection with water supply systems.

Water is drawn from a source of supply through the pipes 16 and 18 into the storage tank 10. The tank 10 is designed to receive and expel the water 20 therefrom through ordinary faucets or the like normally used in homes.

It is necessary that there be a substantially constant air pressure above the water level within

the storage tank 10, and I have used the reference numeral 22 to indicate the air storage space within the tank 10 above the liquid level 24.

As water is withdrawn from the tank 10, a certain amount of air will also be withdrawn therefrom.

It also follows that the air space 22 as water is pumped into the tank will become smaller, due to the fact that the air is compressed, unless a certain amount of additional air is placed into the tank at the same time that water is placed therein. It is the compressed air within the air space 22 that forces the water from the tank to the faucets or through other draw-off openings.

The parts just described are of an ordinary water supply system as used on farms and other places where city or municipal water supplies are not available.

My improved automatic unit comprises a fitting A, having a screw-threaded hub 26 arranged to be screwed into a screw-threaded boss 28 formed in the side of the tank 10, as clearly illustrated in Figure 3 of the drawing. The fitting A has a wrench portion 30 adapting it for engagement by a wrench for installing it on a tank. The screw-threaded hub 26 is provided with a central opening 32 of slightly smaller diameter than the opening 34, formed in the body of the fitting A, thus providing a shouldered wall 36. The purpose of the shouldered wall 36 will hereinafter be more fully set forth.

Within the fitting A, there is provided a small passageway 38 arranged to communicate with a pressure gauge 40. The pressure gauge 40 is screwed into a screw-threaded opening 42 formed in the fitting A, so that the nipple of the pressure gauge 40 is in communication with the passageway 38. Thus the pressure within the tank will be indicated by the gauge 40.

The passageway 38 is below the maximum height of the liquid level within the tank.

The fitting A has a screw-threaded opening 44 into which may be screwed an elbow 46. The elbow 46 is connected to the head of a pump by a pipe or tubing 48. The elbow 46 and pipe 48 are in communication with a small passageway 50 formed in the fitting A.

A short sharpened projection 52 extends into the opening 34 of the fitting A and provides a valve seat.

It is through the opening 50 that air is admitted to the head of the pump 12. The pump 12 includes a piston 54.

A valve structure B is interposed between the pipe or tube 48 and the head of the pump cylinder 56. The opening 50 is normally adapted to be closed by a valve member 58 formed of compressible material mounted within a seat or housing 60. The seat or housing 60 is connected to a shaft 62. The member 60 and the shaft 62 are received within the opening 34 of the fitting A.

A fabric or rubber disc 64 is mounted within the opening 34 in the fitting A and rests against the shouldered wall 36 of the hub 26. Extending through the disc 64 is a rod or float arm 66. The float arm 66 is provided with a screw-threaded portion 68 having a nut 70 thereon. The float arm 66 actually forms a continuation of the rod 62 and has an enlargement or shouldered portion 72 mounted thereon. The shouldered portion 72 rests against one side of the disc 64 and the nut 70 is used for tightening the float arm 66 relative to the disc 64.

A washer 74 rests against one side of the disc 64. Against the washer 74, I place a disc 76. The disc 76 is provided with a plurality of openings 78 through which screws or the like 80 extend for connecting the disc 76, the washer 74 and the disc 64 to the hub 26 of the fitting A.

The enlarged portion 72 on the float arm 66 is provided with a pair of trunnions 82, which rest against the washer 64 and are guidingly held by notches 84 formed in the disc 76. The purpose of the trunnions 82 are to provide a proper guide for the float arm and prevent its rotary movement, although allowing pivotal movement.

A float 86 is connected to the inner free end of the float arm 66. The float arm 66 is received within the opening 32 formed in the hub 26 and thus the entire float structure and float arm, together with the member 58 are supported upon the resilient or flexible disc 64.

The disc 64 serves as a mounting, whereby movement of the float upwardly to the position shown in dotted lines in Figure 3 will cause the member 58 to move away from the seat 52, and thus allow air to pass into the pump head by way of the passage 50 and pipe or tubing 48.

The trunnions 82 properly assure alignment of the member 58 with the valve seat 52. A cover plate 87 is secured to the fitting A, and protects the valve mechanism within the fitting A.

The body of the fitting is provided with an opening 88 for allowing atmosphere to enter.

It will be noted that when the liquid level is in a normal position, then the weight of the float arm will cause the member 58 to engage the seat 52 for preventing air from passing into the pump and thus into the storage tank. When the water in the storage tank reaches a point above its normal position, then of course the float is moved upwardly within the tank, and the outer end of the float arm will be moved away from the valve seat 52, allowing air to be pumped into the storage tank, while water is being pumped into it.

It will, of course, be understood that providing a flexible disc 64 and a fixed plate 76 thereover, enables me to make an air-tight and water-tight connection.

It will be further noted that the flexible plate 64 serves as the entire medium for carrying the float arm and member that closes the valve seat 52.

It will be further noted that the parts are so arranged that a new disc 64 may be easily and quickly installed, should it ever be required. The parts are easily and quickly assembled or disassembled.

Some changes may be made in the arrangement and construction of the various parts of my air volume controlling device, without departing from the real spirit and purpose of my invention, and it is my intention to cover by my claims, any modified forms of structure or use of mechanical equivalents, which may be reasonably included within their scope.

I claim as my invention:

1. In a device of the class described, a fitting, an opening therethrough, a diaphragm across said opening, a pair of washers secured to said fitting, said diaphragm being positioned between the washers and the fitting, a control rod extending through the diaphragm and through the opening of the washers, said control rod being secured to and sealed relative to the diaphragm, trunnions on said control rod positioned between said washers and retained thereby for allowing pivotal movement only of said trunnions.

2. In a device of the class described, a fitting, an opening therethrough, a diaphragm across said

opening, means in engagement with the edge of said diaphragm for sealing said edge relative to said fitting, a control rod extended through and sealed relative to said diaphragm, trunnions extending laterally from said control rod, said means including a member having socket-like portions opening toward each other to receive the ends of said trunnions and confine said control rod in a predetermined position longitudinally relative to said fitting but allowing pivotal movement thereof on said trunnions as an axis.

3. In a device of the class described, a fitting provided with means for detachably securing it in an opening in a tank, an opening therethrough, a passageway in a wall of said fitting, opening into said tank at one end and arranged adjacent the opposite end to receive a pressure gauge, a diaphragm across said opening, means in engagement with the edge of said diaphragm for sealing said edge relative to said fitting, a control rod extended through and sealed relative to said diaphragm, trunnions extending laterally from said control rod, said means including a pair of members having socket-like portions between them to receive said trunnions when said members are secured in position sealing said diaphragm relative to said fitting and confine said control rod in a predetermined position longitudinally relative to said fitting but allowing pivotal movement thereof on said trunnions as an axis.

4. In a device of the class described, a fitting, an opening therethrough, a diaphragm across said opening, a pair of washers secured to said fitting, said diaphragm being positioned between the washers and the fitting, a control rod extending through the diaphragm and through the opening of the washers, said control rod being secured to and sealed relative to the diaphragm, trunnions on said control rod positioned between said washers and retained thereby, at least one of said washers having deformations to receive said trunnions to allow pivotal movement thereof.

ALBERT PENN.