Aug. 9, 1932. C. C. BUCHANAN 1,871,153

SHIPPING JACKET

Filed May 7, 1931 2 Sheets-Sheet 1

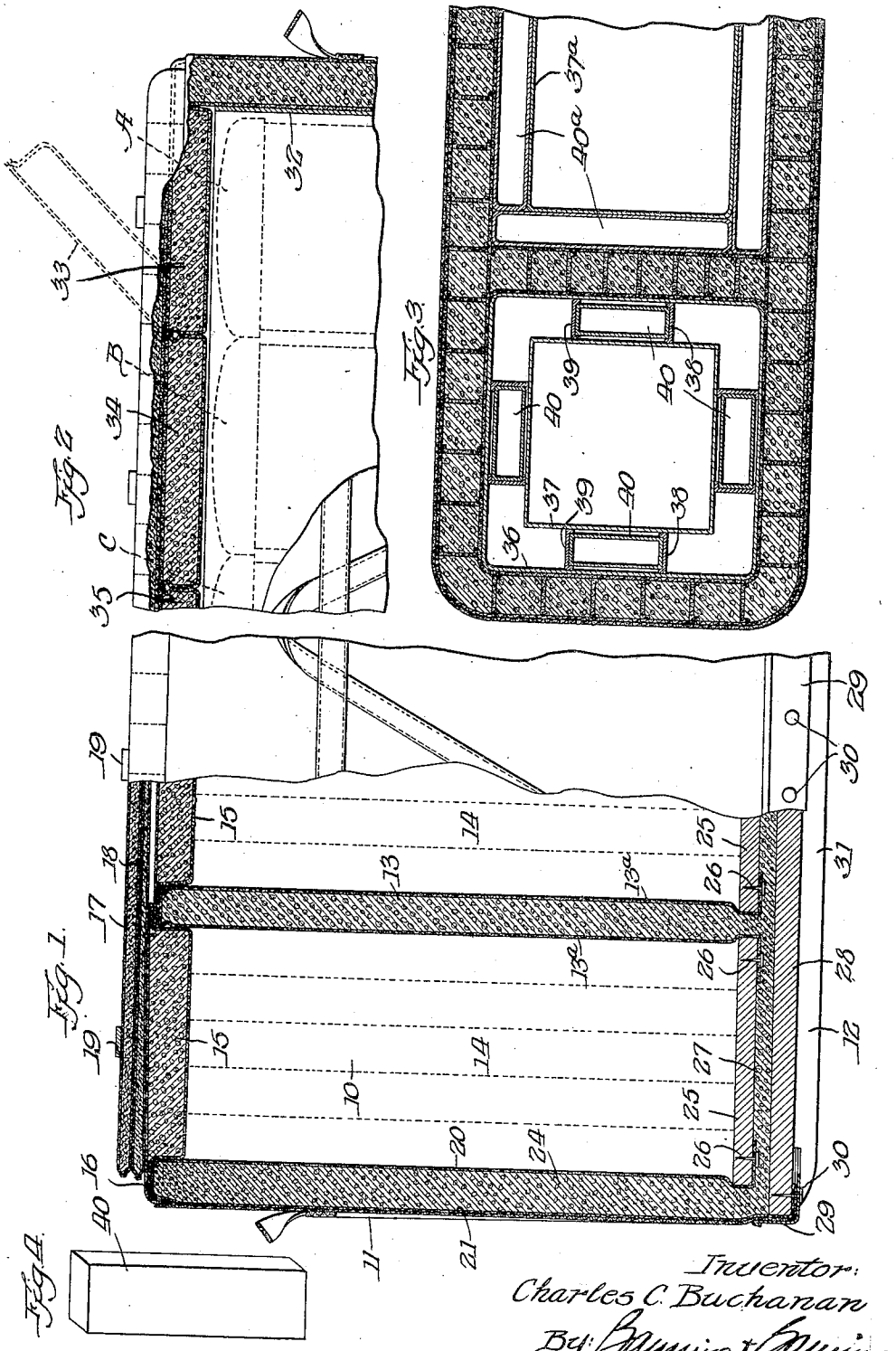

Aug. 9, 1932. C. C. BUCHANAN 1,871,153

SHIPPING JACKET

Filed May 7, 1931 2 Sheets-Sheet 2

Fig. 5.

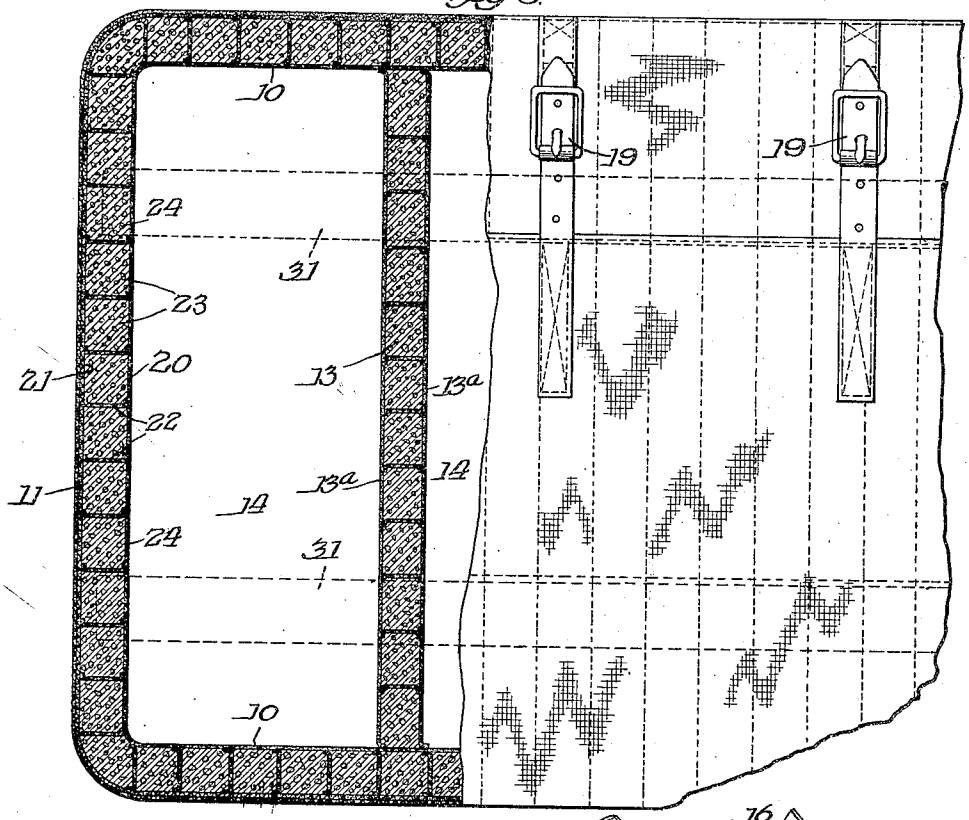

Fig. 6.

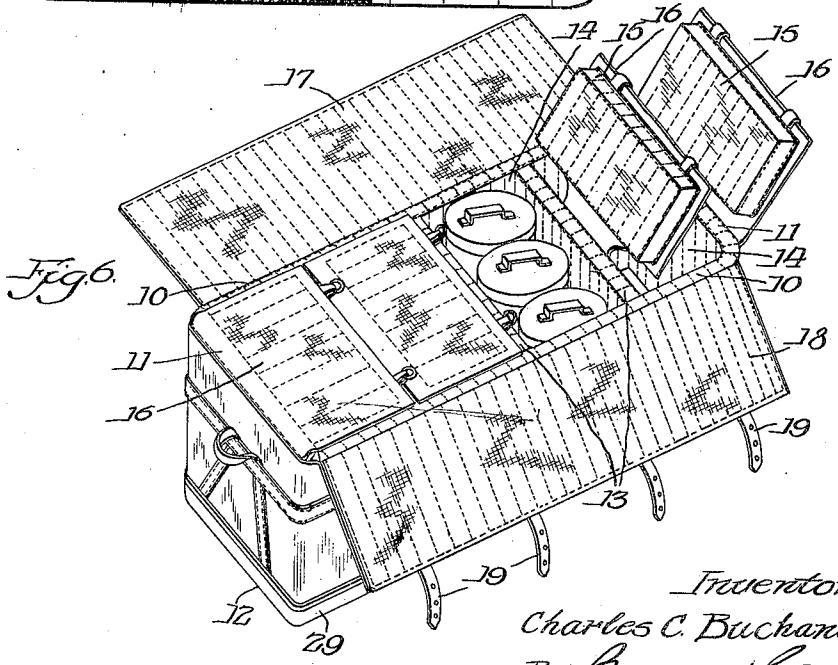

Inventor:
Charles C. Buchanan
By: Banning & Banning
Attys

Patented Aug. 9, 1932 1,871,153

UNITED STATES PATENT OFFICE

CHARLES C. BUCHANAN, OF MADISON, INDIANA, ASSIGNOR TO MEESE, INC., OF MADISON, INDIANA, A CORPORATION OF DELAWARE

SHIPPING JACKET

Application filed May 7, 1931. Serial No. 535,718.

An object of this invention is to provide an improved form of shipping jacket or truck shipper for ice cream containers, and the like, and particularly one for holding a number of such containers.

A further object is the provision of suitable cooling means for maintaining a low temperature within the shipping jacket over a considerable period.

These and other objects, as will hereinafter appear, are fully disclosed in the following application and shown in the accompanying drawings, in which—

Figure 1 is a partial side elevation of an insulated shipping jacket or truck shipper embodying the invention shown partly in vertical section;

Fig. 2 is a similar view showing a modified form of the invention;

Fig. 3 is a horizontal section through a container embodying another form of the invention;

Fig. 4 is a perspective view of a brine pad used in the jacket of Fig. 3;

Fig. 5 is a partial top plan view of a container showing portions of it in horizontal section; and

Fig. 6 is a reduced perspective view of the same.

The embodiment illustrated is an improvement on the shipping jacket disclosed in the patent to Kidwell No. 1,587,655. The form shown in Figs. 1, 5 and 6 comprises side and end walls 10 and 11 respectively, to which is secured a bottom 12, as will later be explained in detail, the whole forming a jacket which is divided by partition members 13 to form a series of compartments 14. In the present instance each of these compartments, as shown in Fig. 6, is adapted to hold three ice cream cans or containers.

Each of these compartments is preferably supplied with an individual cover 15 in the form of a pad constructed as will later be explained, and which is carried on a flexible hinged member 16 as of canvas, duck, and the like. These pads fit snugly into the top of the compartment, and when closed are covered over by top flaps 17, 18, which are made up of canvas, or the like, between which is a suitable insulating medium, the whole being quilted or pocketed to retain this insulating medium in place and prevent its shifting. Suitable straps or fasteners as 19 retain these flaps in place.

The side walls 11 are made up of spaced inner and outer envelopes 20, 21 which are preferably woven fabric, such as canvas, duck treated to render it moisture and mildew proof. These envelopes have vertically extending strips 22 of the same fabric sewed therebetween so as to provide a series of vertically extending pockets 23. These pockets are closed at the top, and the jacket is inverted and these pockets are filled from the bottom after the manner disclosed in the Kidwell patent supra, preferably with ground cork 24, or a similar heat insulating material.

The partition members 13 are sewed into the end and side walls preferably prior to filling the pockets in the side walls, the pockets in the partitions then being filled at the same time. Referring now to Fig. 1, as the operation of filling these pockets nears completion, an upper bottom member 25 consisting preferably of a piece of wood, slightly longer and slightly wider than the interior of the finished compartment 14, is inserted between the inner envelope 20 of the side and end walls and the envelope 13^a of the partition 13. These envelopes are then drawn tightly around the bottom member 25 and firmly secured thereto as by means of nails 26, or the like. With the upper and bottom members thus secured in place the operation of filling the space with the ground cork 24 is then continued, and a layer of this ground cork 27 is then preferably spread over the members 25, as shown in Fig. 1, after which a lower bottom member 28 substantially the size of the shipper is placed over the layer of cork 27 and within the outer envelope 21. This envelope is then drawn tightly around and over the bottom member 28, after which it is enclosed by a metal corner strip 29, both the corner strip and the envelope 21 being secured in place by suitable means such as nails 30. Skids 31 may be preferably secured to the bottom member 28 as by means

of screws or nails, and the like. Casters, rollers, or the like may be used.

In Fig. 2 is shown a modified form of shipper in which the partitions 13 are omitted, and which may be provided with a metal lining 32 which is snugly held within the side walls so as to make its removal very difficult. In this form the cover is made up of a series of jointed cover sections 33, 34, 35, etc., which can be rolled back from either end. Straps and buckles, (not shown) or other suitable fastenings, serve to hold the cover in place. These may be located around the sides and ends. Each cover overlies a line of ice cream containers A, B, C, (Fig. 2). Thus to get at the containers A the cover 33 is folded back, thereby rendering access to these containers easy without at the same time uncovering the remaining ice cream containers, as those of the lines B, C which still remain covered. After the containers of the line A have been removed, the covers 33, 34 are then rolled back thereby uncovering the similar line of containers, and so on.

In Fig. 3 is shown still another modification of the invention, in which each compartment is provided with spaced metal linings 36 and 37 which are preferably rectangular in form to better accommodate the packing of ice cream bricks, each of which is enclosed in its own paper or metal carton. These bricks, however, are not shown. The metal linings 36, 37 are separated and held in spaced relationship by means of guide members 38, 39 which form a channel in which may be inserted a brine pad 40. This brine pad is shown in Fig. 4, and consists of a metal container filled with a solution which will freeze only at low temperature.

In use these brine pads are cooled to a temperature near or below zero Fahrenheit, which is sufficient to freeze them solid. In this condition they are inserted in the jacket and serve to keep the bricks of ice cream frozen while in this container for a very considerable period of time, even though the container is subjected to quite high temperature. If desired, these brine pads can be made longer, as shown at 40^a in the right-hand end of Fig. 3. In this form they substantially surround the inner metal lining 37^a and replace the guides or spacers.

Referring to Fig. 1, it will be understood that the space 27 may be omitted and the upper and lower bottom members 25, 28 brought together. These members may, if desired, be secured together to prevent their shifting under conditions of heavy use. Moreover, the above construction, as well as that of Fig. 1, is applicable to a shipping jacket adapted to hold a single ice cream container.

Thus it will be seen that a very simple and efficient form of shipper is provided, and one which can be efficiently and economically manufactured. The side walls of this shipper are self-supporting, and the continuous side and bottom walls make for a superior unitary construction. In this connection it will be noted that the upper bottom members 25 are forced into the side walls of each compartment depressing the same so as to make for a tight joint. This construction is applicable either to a shipper having a single compartment adapted to hold a single can, or one having many compartments, and those in which each compartment is adapted to hold one or more ice cream containers. One advantage of the large shipper illustrated in Fig. 6, for example, is that several cans of ice cream tend to keep each other cold, thereby adding to its efficiency.

While I have shown and described but a few embodiments of my invention, it is to be understood that it is capable of many modifications. Changes, therefore, in the construction and arrangement may be made which do not depart from the spirit and scope of the invention as disclosed in the appended claims.

I claim:

1. A heat insulating shipping jacket comprising side walls made up of spaced inner and outer fabric envelopes with interconnecting members forming longitudinal pockets in which is packed heat insulating material, and a bottom comprising upper and lower rigid spaced members connected respectively to the inner and outer envelopes and providing a space communicating with the spaces in the side walls and filled with a heat insulating material.

2. A heat insulating shipping jacket comprising side walls made up of spaced inner and outer woven fabric envelopes with interconnecting members forming longitudinal pockets in which is packed finely divided cork, a bottom comprising upper and lower wooden spaced members connected respectively to the inner and outer envelopes and providing a space communicating with the pockets in the side walls and filled with finely divided cork, and a cover therefor.

3. A heat insulating multi-compartment shipping jacket comprising side walls and cross partitions made up of spaced inner and outer woven fabric envelopes with interconnecting members forming longitudinal pockets in which is packed finely divided cork, a bottom comprising upper and lower wooden members between which is a space communicating with the pockets in the side walls and filled with finely divided cork, and a cover therefor, said fabric envelopes being secured to the wooden members, the inner side wall fabric being folded under and nailed to the upper bottom member and the outer side wall fabric being folded under and secured to the lower bottom member, the upper bottom members being individual to each com-

partment and the lower bottom member being continuous.

4. A heat insulating shipping jacket comprising side walls made up of spaced inner and outer woven fabric envelopes with interconnecting members forming longitudinal pockets in which is packed finely divided heat insulating material, a bottom comprising upper and lower spaced members connected respectively to the inner and outer envelopes and providing a space communicating with the spaces in the side walls and filled with a finely divided heat insulating material, spaced metal linings, cooling means insertable between said linings, and a cover for said jacket.

5. A heat insulating multi-compartment shipping jacket comprising side walls and cross partitions made up of spaced envelope members, and a bottom member comprising upper and lower rigid members connected respectively to the inner and outer envelope members and providing a space between the rigid bottom members communicating with the space in the walls and partitions for the reception of a heat insulating material, the upper bottom members being individual to each compartment and the lower bottom member being continuous.

6. A heat insulating multi-compartment shipping jacket comprising side walls and cross partitions each made up of spaced inner and outer fabric envelope members, individual rigid bottom members connected to the inner envelope members of each compartment, and a rigid bottom member for the jacket connected to the outer envelope members of the side walls and spaced from the bottom members of said compartments, whereby to provide a continuous space about the sides and bottoms of said compartments for the reception of a heat insulating material.

CHARLES C. BUCHANAN.