H. H. CANADAY.

SULKY-PLOWS.

No. 194,072. Patented Aug. 14, 1877.

Fig 1

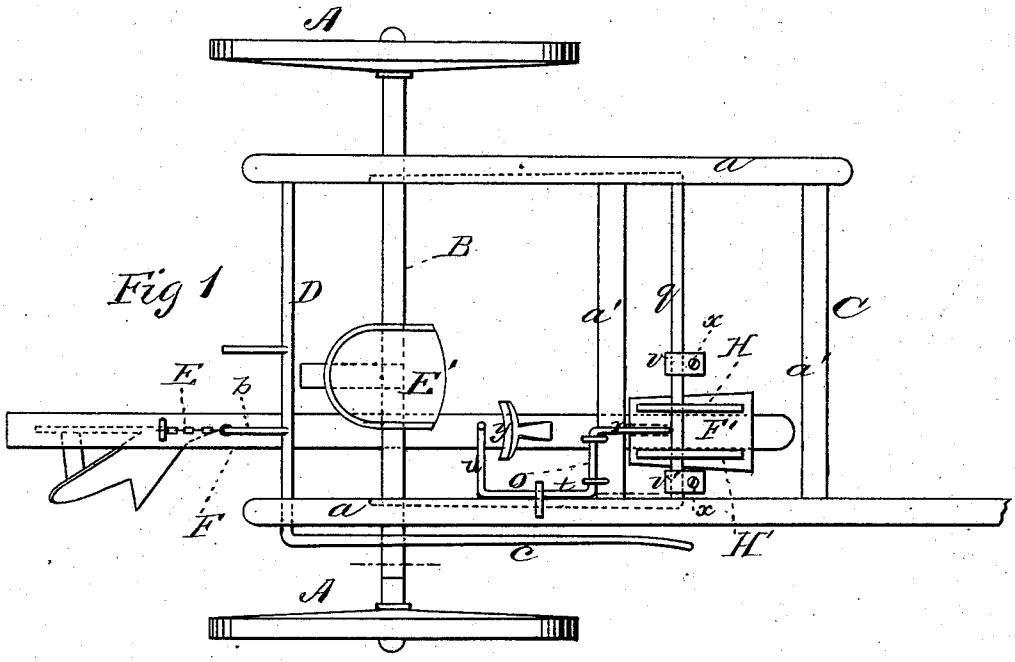

Fig 2

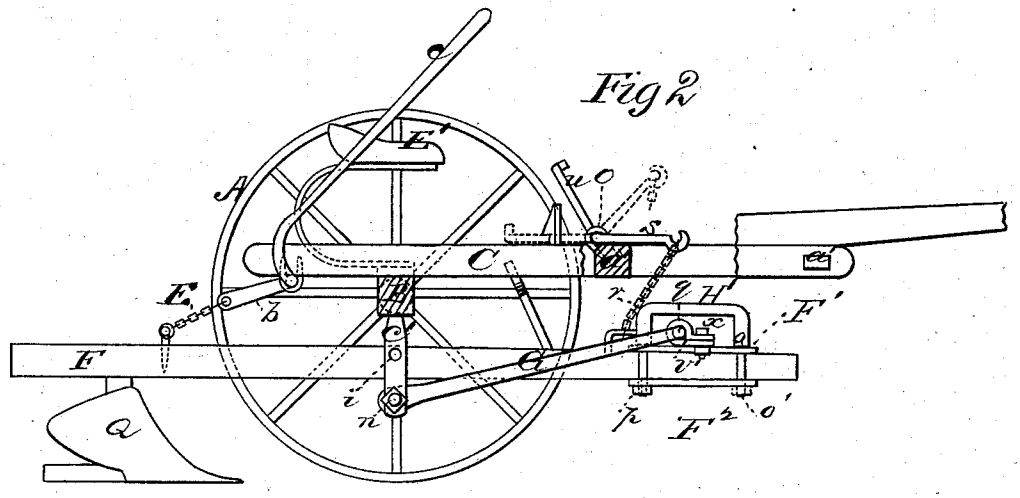

WITNESSES

Villette Anderson,

F. J. Masi

INVENTOR

Hugh H. Canaday,

by E. W. Anderson,

ATTORNEY

N. PETERS, PHOTO-LITHOGRAPHER, WASHINGTON, D. C.

UNITED STATES PATENT OFFICE.

HUGH H. CANADAY, OF FAIRFIELD, IOWA.

IMPROVEMENT IN SULKY-PLOWS.

Specification forming part of Letters Patent No. **194,072**, dated August 14, 1877; application filed June 30, 1877.

To all whom it may concern:

Be it known that I, HUGH H. CANADAY, of Fairfield, in the county of Jefferson and State of Iowa, have invented a new and valuable Improvement in Sulky-Plows; and I do hereby declare that the following is a full, clear, and exact description of the construction and operation of the same, reference being had to the annexed drawings, making a part of this specification, and to the letters and figures of reference marked thereon.

Figure 1 of the drawings is a representation of a top view of my improved sulky-plow, and Fig. 2 is a longitudinal section thereof.

This invention has relation to improvements in sulky-plows.

The object of my invention is to adapt the devices shown and described in my Letters Patent No. 188,586, of March 20, 1877, to be used in connection with a single plow-beam.

The nature of my invention will be clearly evident from the following description, and fully set forth in the claim.

In the annexed drawings, the letter A designates the wheels, and B the axle, of my improved sulky-plow. C is the sulky platform or frame, of rectangular form, and composed of longitudinal and transverse bars *a a'*. This frame is secured to and extends in rear of the axle, and affords bearings in its rear end for a transverse metallic shaft, D, having a projecting arm, *b*, from the end of which depends a chain, E, secured to the rear portion of the plow-beam F. This shaft is operated by means of a hand-lever, *c*, secured to one of its ends, within convenient reach of the driver's seat E'. When lever *c* is thrown to the front the plow will be raised, and at the same time drawn to the rear out of the ground. When depressed to its full extent this lever engages a catch on the frame, and holds the rear part of the beam in a raised position. *c'* represents two spaced metallic arms, projecting downward from the axle, and provided with spaced perforations *i*, to which is pivoted, by means of a key-bolt, *n*, the ends of a ⊔ shaped metallic frame, G. This frame vibrates freely on the said arms, and extends nearly to the front of the frame C. F^1 F^2 designate two strong rectangular plates, arranged the one above and the other below the beam F, and clamped thereon by means of strong metallic staples H H', that flank the said beam, as shown in Fig. 1, and rigidly hold the plates in position. The staples may be shouldered as shown at *o*, and screw-threaded at their ends, as at *o'*, and the clamping action of the plates may be produced by means of nuts *p*, applied upon the screw-threaded ends *o'* of said staples below plate F^2. By loosening the nuts *p* the plates or clamps F^1 F^2 may be adjusted at any desired position on beam F. The staples loosely straddle the end bar *q* of the frame G, and serve as a connection of the front portion of the beam to it, and consequently to the axle. Clamp-plate F^1 is connected by means of a chain, *r*, to an arm, *s*, of a metallic rock-shaft, O, having its bearings in the front portion of the sulky-frame C, and provided with an operating-arm, *t*, having a stirrup or foot-rest, *u*, extending inward across the frame, within reach of the driver. By bearing down on this lever-stirrup the front end of the beam may be raised, so as to cause the plow Q to take less hold upon the ground. The play sidewise of the front end of the beam upon the cross-bar of the vibrating frame G is controlled by means of two adjustable sleeves, *v v'*, arranged upon said bar at each side of plate F^1. These sleeves are securely adjusted on said bar by means of a clamp-screw, *x*. By adjusting these clamp-sleeves in the proper position the beam F may be inclined to the line of draft, and more or less land taken by the plow. The perforations in the arms *c'*, depending from the axle, enable me to level the frame G, and consequently the plow, in breaking up hill-sides. This is done by raising the down-hill side of said frame and lowering the up-hill side until the front bar *q* is horizontal, and then confining the side arms of said frame to pendent arms *c'* by means of the key-bolts *n*.

The beam F is provided with a T-shaped foot-rest, *y*, bearing upon which the driver not only steadies himself in his seat, but also regulates in great measure the movements of the plow-beam.

Having thus described my invention, I

claim and desire to secure by Letters Patent—

The combination, with a sulky-carriage, the vertically-vibrating frame G, and the plow-beam F, of the adjustable clamp-plates F^1 F^2 and the clamp-staples loosely straddling the end bar of said frame, substantially as specified.

In testimony that I claim the above I have hereunto subscribed my name in the presence of two witnesses.

HUGH H. CANADAY.

Witnesses:
GOTTLIP ARRAS,
JOHN SCHAEFER.