United States Patent [19]

Matto et al.

[11] **3,854,120**

[45] **Dec. 10, 1974**

[54] **ELECTROMECHANICAL PROGRAMMABLE LOCK**

[76] Inventors: **Victor G. Matto,** Highlands Dr., Kinnelon, N.J. 07405; **Sandor A. Veres,** 247 Washington Ave., Rutherford, N.J. 07070

[22] Filed: **Apr. 30, 1973**

[21] Appl. No.: **355,583**

[52] **U.S. Cl.** ..... **340/164 R,** 70/278, 200/42, 317/134

[51] **Int. Cl.** **E05b 49/00,** H01h 27/00

[58] **Field of Search** .... 340/147 MD, 164 R, 164 A, 340/149 R, 274; 200/42, 44, 45; 317/134; 70/278

[56] **References Cited**

UNITED STATES PATENTS

3,317,904	5/1967	Clay	200/44 X
3,600,643	8/1971	Losey	340/164 A

Primary Examiner—Donald J. Yusko
Attorney, Agent, or Firm—Robert A. Green

[57] **ABSTRACT**

The programmable lock includes a portion made up of a plurality of programmable key sections and a lock portion made up of a plurality of programmable lock sections. Each lock section mates with and coacts with a corresponding key section. Each key section carries a plurality of key contacts and a fixed power supply contact, and the mating lock section includes a lock contact for each key contact and power contact for the fixed power supply contact of the key section. A rotatable cylinder surrounds the lock and includes two ring electrodes, one for contacting a selected lock contact, and the other shaped to contact all of the other contacts. The key section includes means for selecting one of the key contacts which corresponds to the one lock contact selected by the one ring electrode, and this represents a match for the lock and key sections.

Each of the lock and key sections can be differently coded, and they can be arranged electrically so that, when the key(s) properly match the lock(s), a useful output is obtained, and, if they do not match, an alarm signal may be obtained.

A programmable lock can include any number of sections made up of the parts described above to provide a unitary lock having a large number of possible combinations.

14 Claims, 17 Drawing Figures

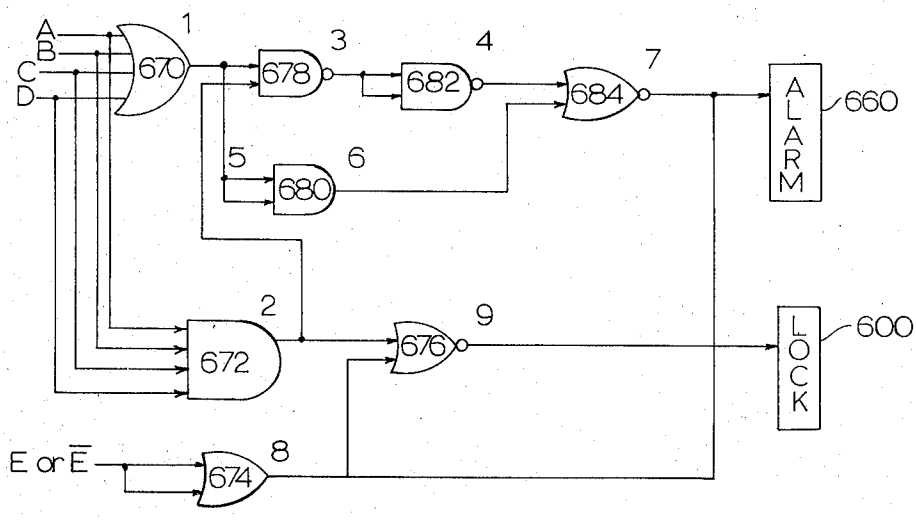

Fig. 1

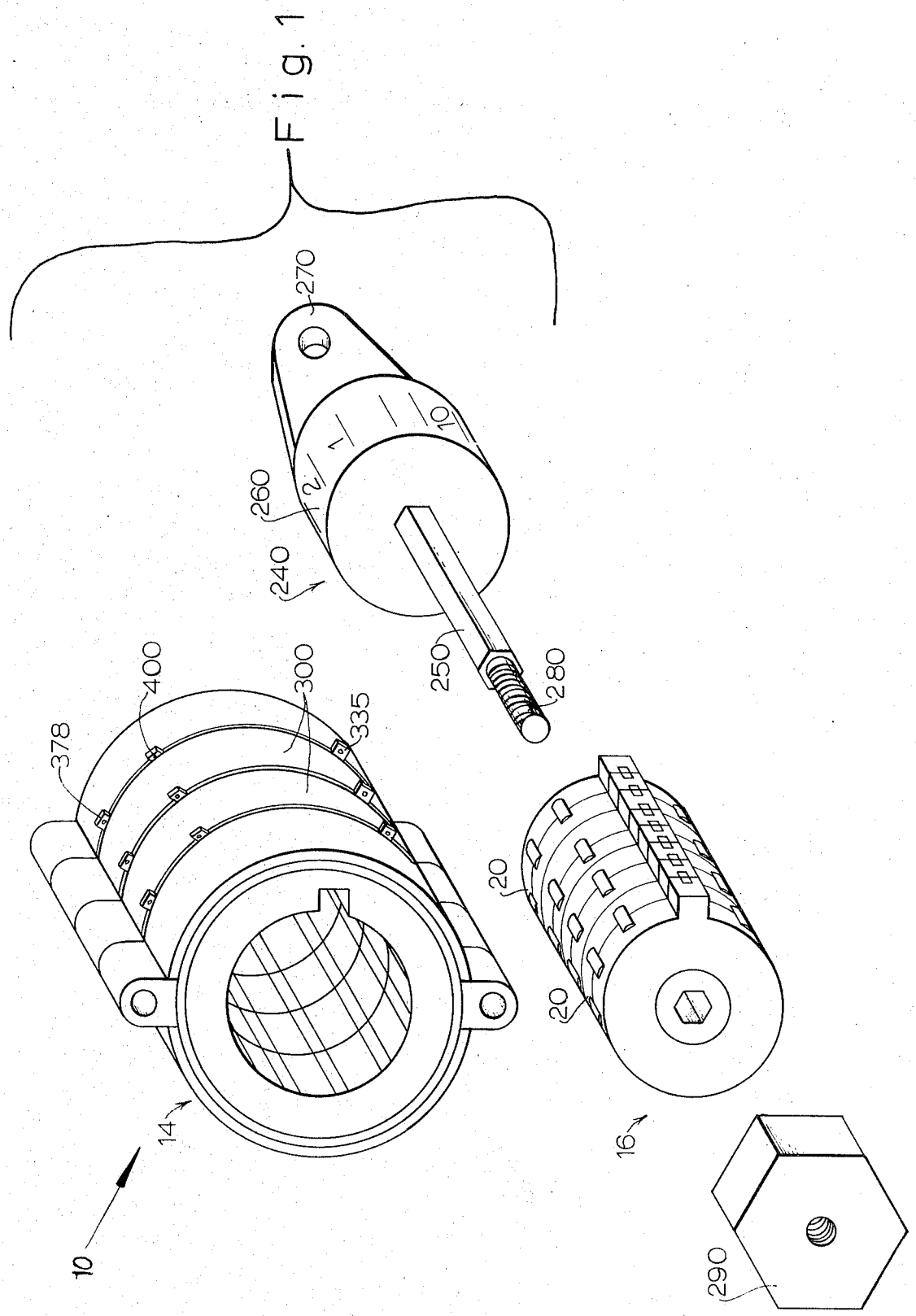

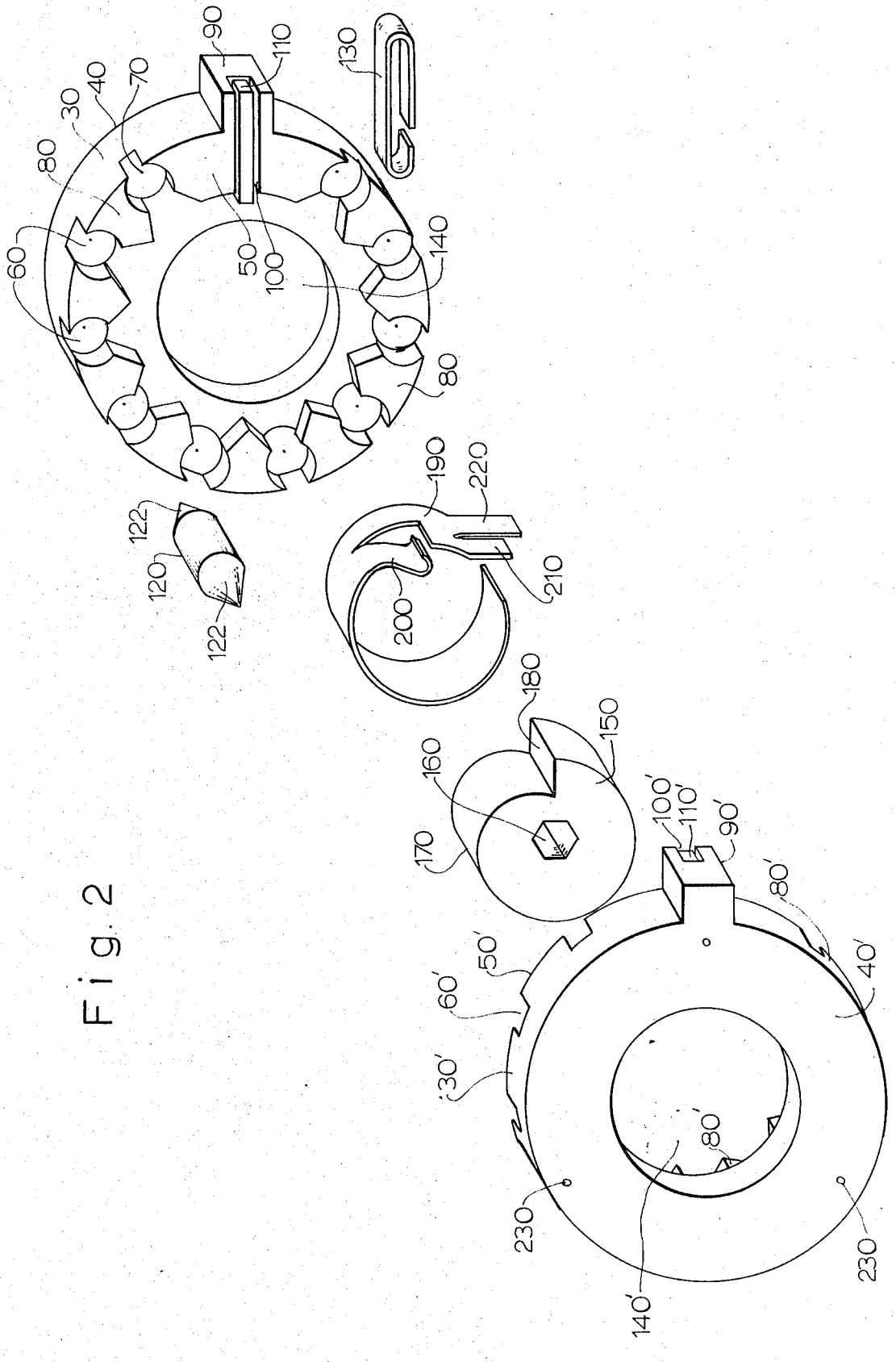
90
110
130
30
40
70
80
60
50
100
140
80
190
220
122
120
122
200
210
180
150
160
170
100'
110'
90'
80'
50'
40'
60'
30'
80'
230
230
140'

Fig. 2

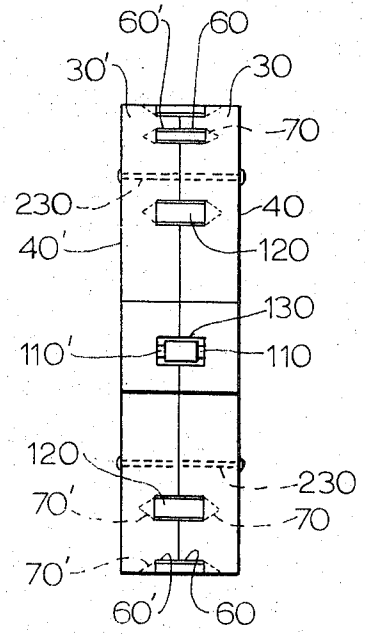
60'
60
30'
30
70
230
40
40'
120
130
110'
110
120
230
70'
70
70'
60'
60

Fig. 3

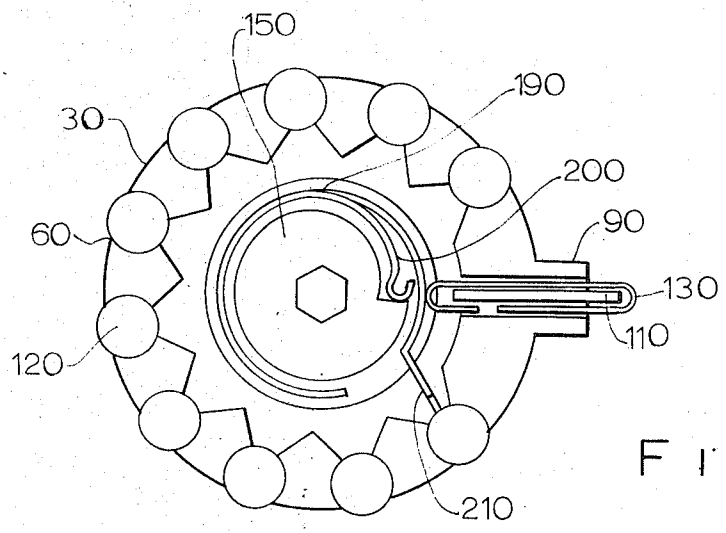
150
190
30
200
90
60
130
110
120
210

Fig 4

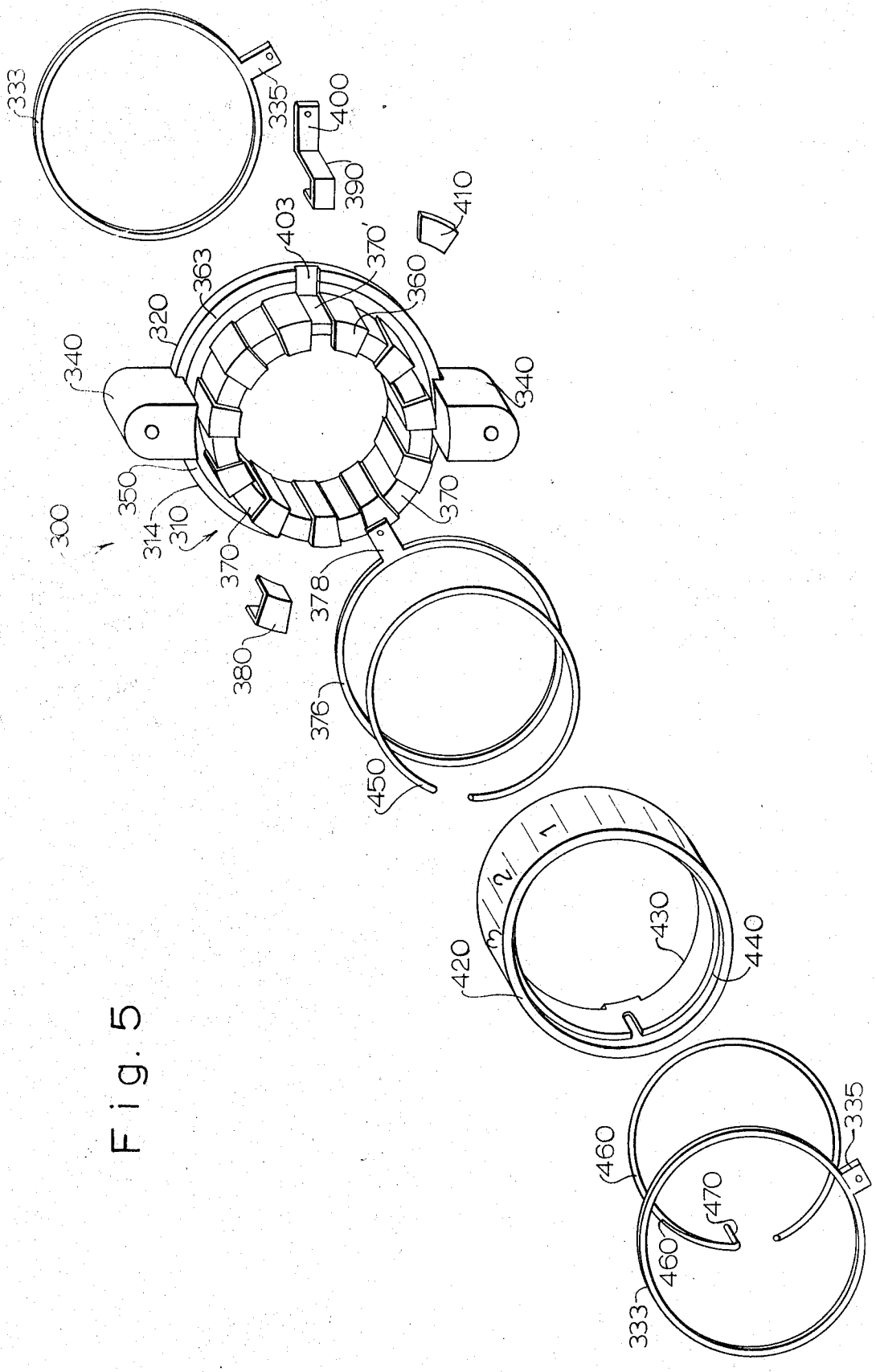
333
335
400
390
410
403
370'
360
363
320
340
340
350
314
310
370
370
300
378
380
376
450
420
430
440
460
470
460
335
333

Fig. 5

Fig. 6

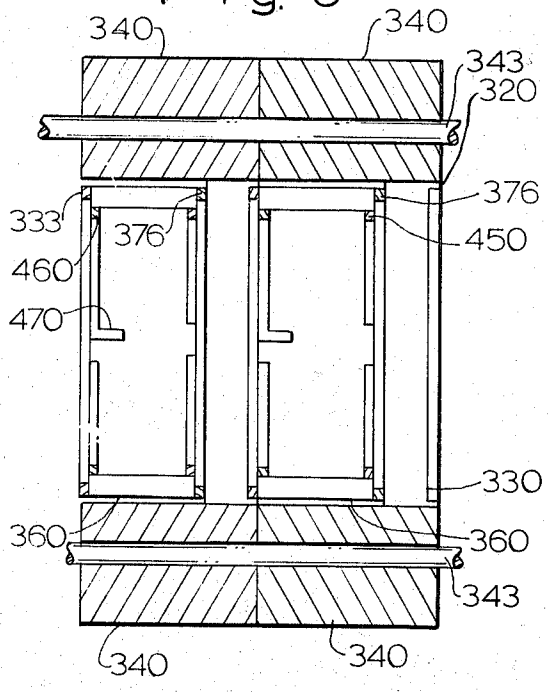

Fig. 7

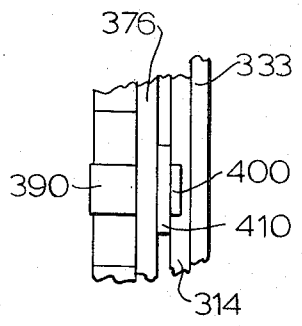

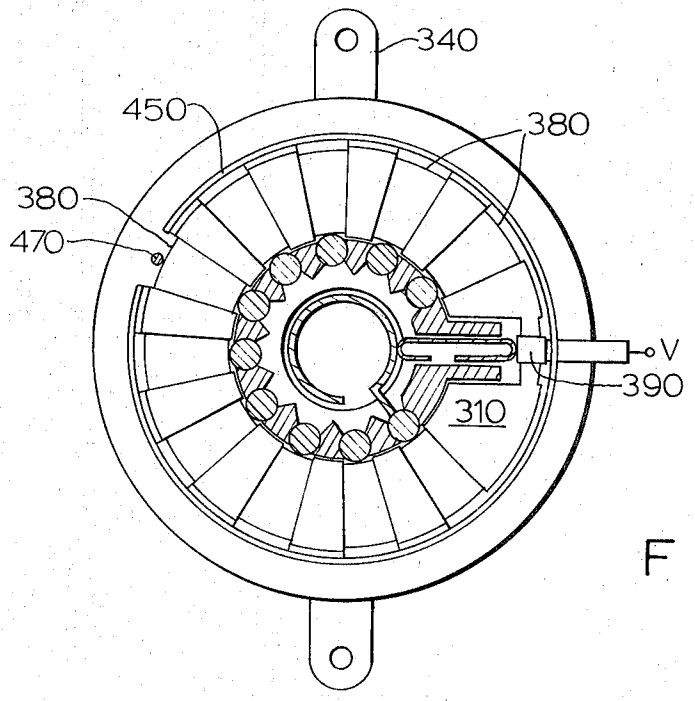

Fig. 8

Fig. 9

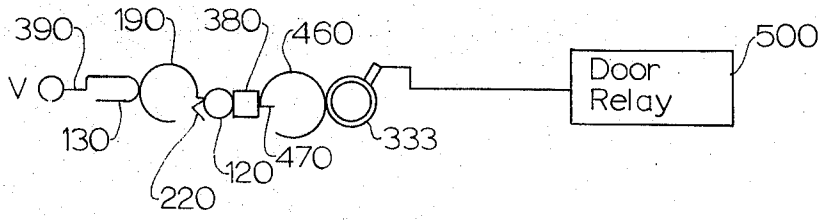

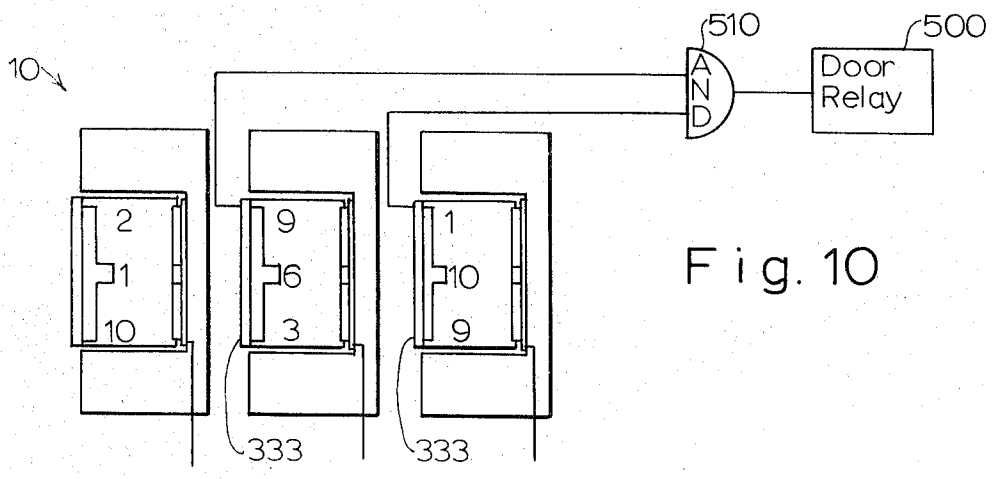

Fig. 10

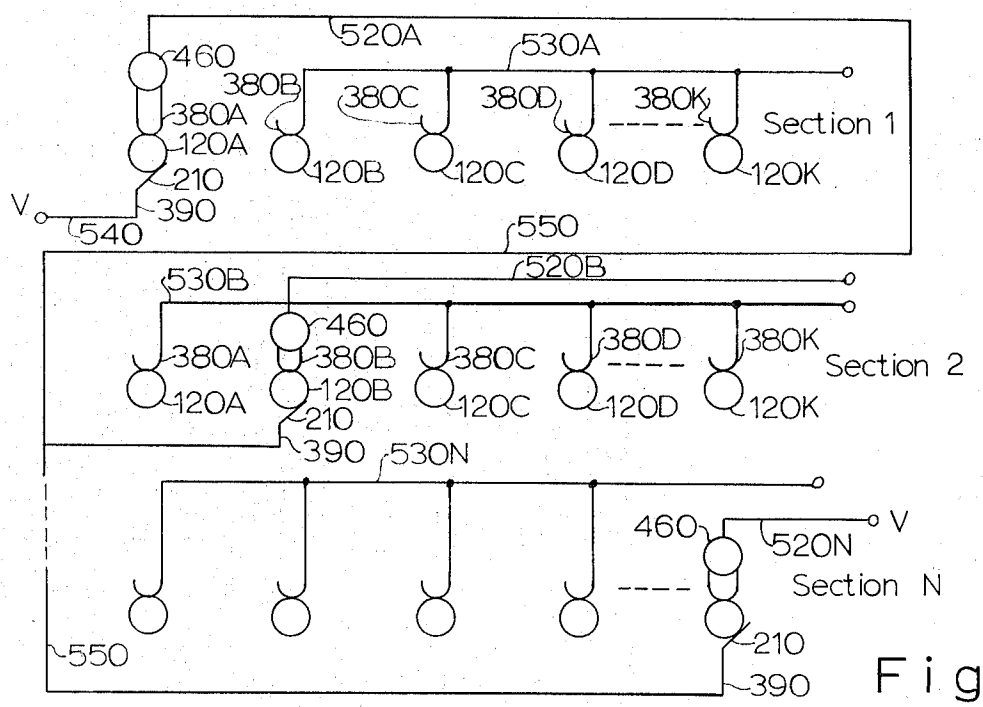

Fig. 11

Fig. 12

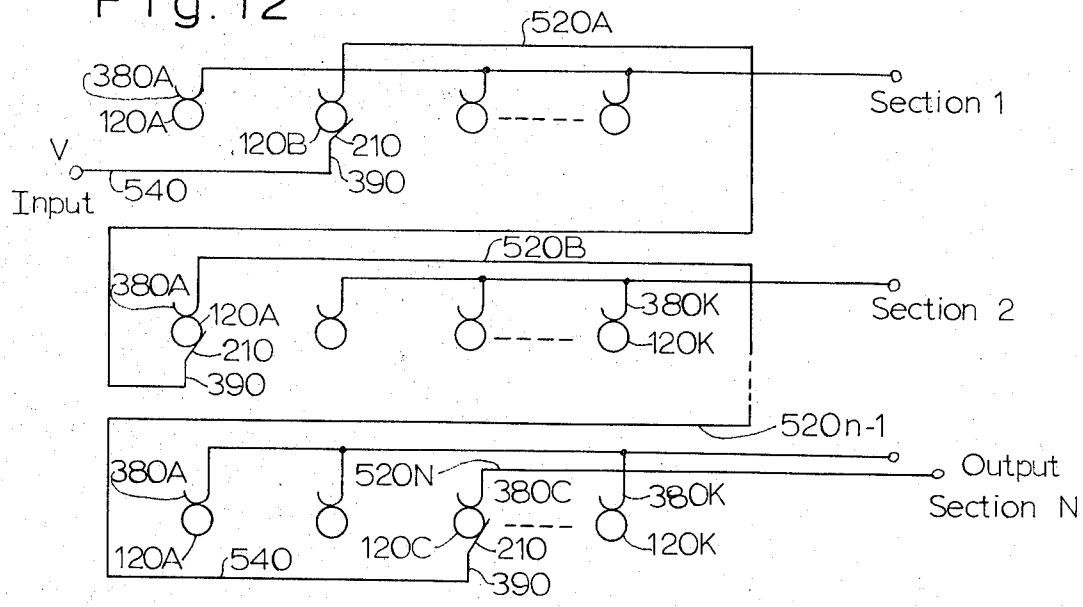
520A
380A
120A
120B
210
390
V
Input
540
Section 1
520B
380A
120A
210
390
380K
120K
Section 2
520n-1
380A
120A
540
520N
120C
380C
210
390
380K
120K
Output
Section N

Fig. 13

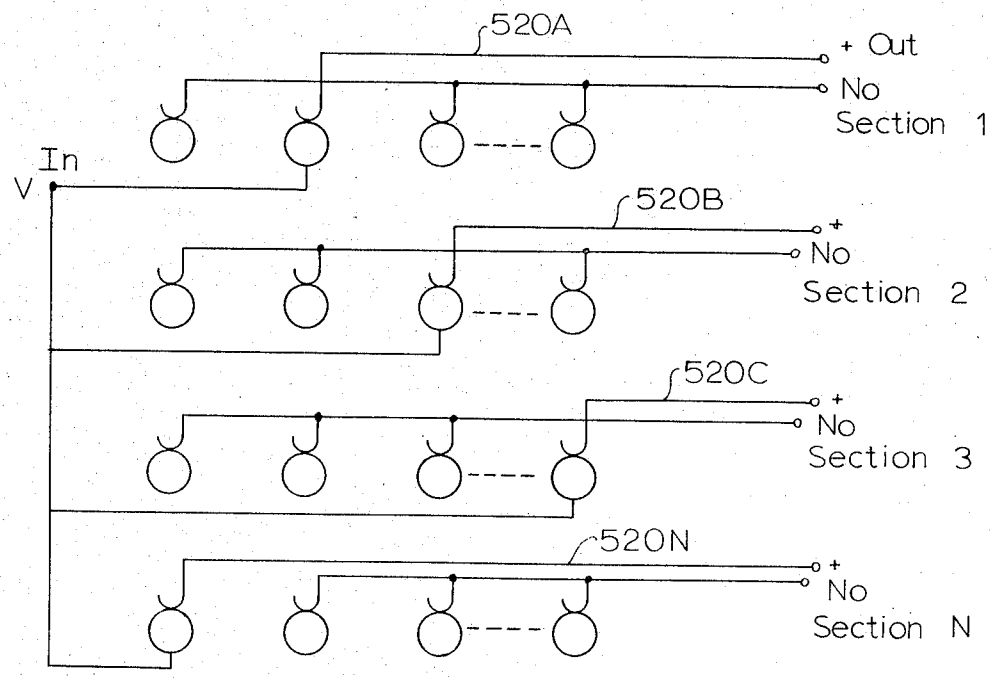
520A
+ Out
No
Section 1
In
V
520B
+
No
Section 2
520C
+
No
Section 3
520N
+
No
Section N

Fig. 14

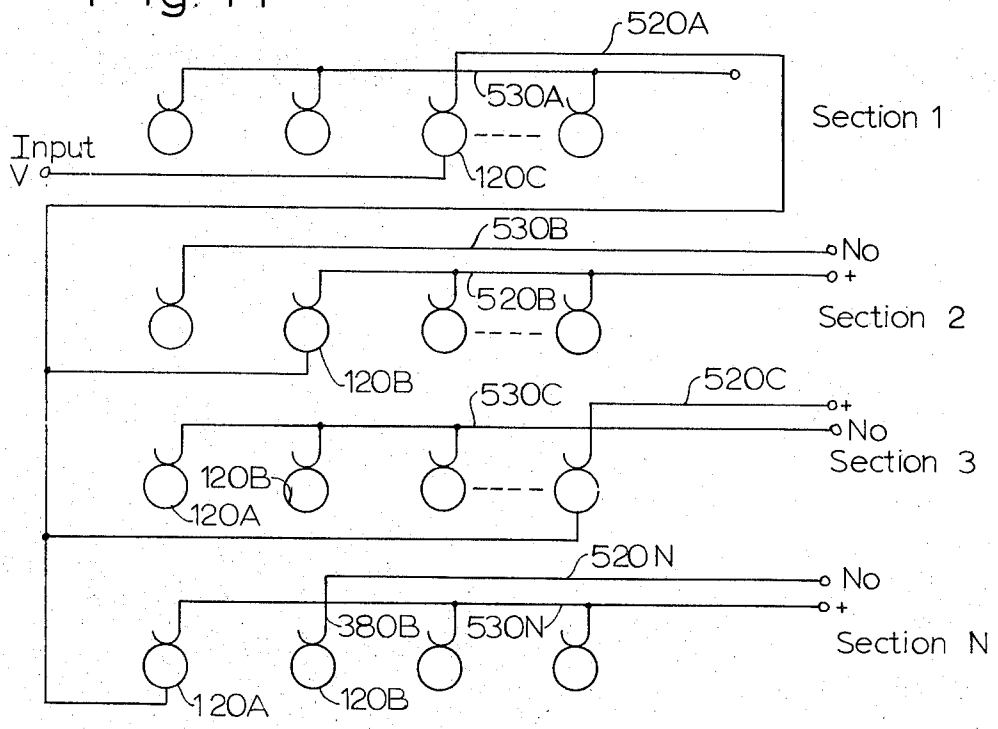
520A
530A
Section 1
Input
V
120C
530B
No
+
520B
Section 2
120B
530C
520C
+
No
Section 3
120B
120A
520N
No
+
380B
530N
Section N
120A
120B

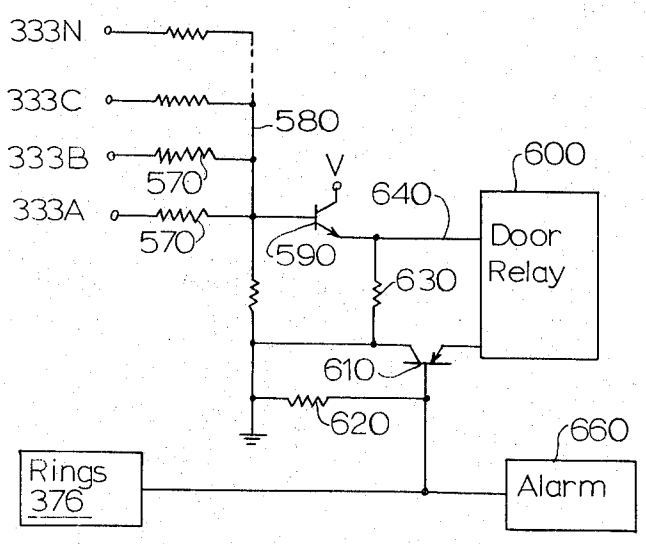
333N
333C
580
333B
570
V
600
640
333A
570
590
Door
Relay
630
610
620
660
Rings
376
Alarm

Fig. 15

Fig. 16

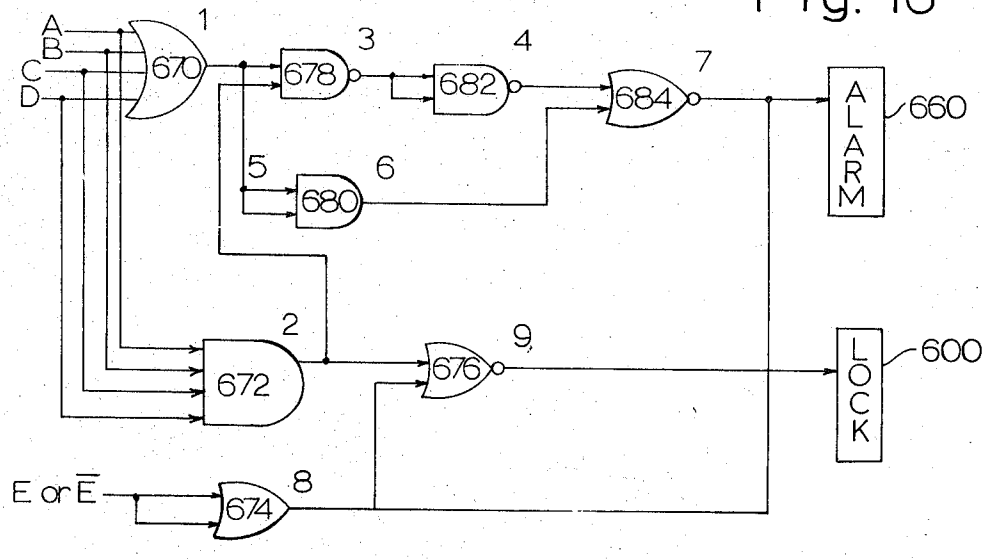

TRUTH TABLE

A	B	C	D	E or $\overline{E}$	1	2	3	4	5	6	7	8	9	
0	0	0	0	0	0	0	1	0	0	0	0	0	0	
1	0	0	0	0	1	0	1	0	1	1	1	0	0	ALARM
0	1	0	0	0	1	0	1	0	1	1	1	0	0	"
1	1	0	0	0	1	0	1	0	1	1	1	0	0	"
0	0	1	0	0	1	0	1	0	1	1	1	0	0	"
1	0	1	0	0	1	0	1	0	1	1	1	0	0	"
0	1	1	0	0	1	0	1	0	1	1	1	0	0	"
1	1	1	0	0	1	0	1	0	1	1	1	0	0	"
0	0	0	1	0	1	0	1	0	1	1	1	0	0	"
1	0	0	1	0	1	0	1	0	1	1	1	0	0	"
0	1	0	1	0	1	0	1	0	1	1	1	0	0	"
1	1	0	1	0	1	0	1	0	1	1	1	0	0	"
0	0	1	1	0	1	0	1	0	1	1	1	0	0	"
1	0	1	1	0	1	0	1	0	1	1	1	0	0	"
0	1	1	1	0	1	0	1	0	1	1	1	0	0	"
1	1	1	1	0	1	1	0	1	1	1	0	1	0	NORMAL STATE
1	0	1	1	1	1	0	1	0	1	1	1	1	0	E or $\overline{E}$
1	1	1	1	1	1	1	0	1	1	1	0	1	0	ALARMS

Fig. 17

ELECTROMECHANICAL PROGRAMMABLE LOCK

BACKGROUND OF THE INVENTION

In the prior art, combination locks are known which require a particular key or combination of movements of a dial to be operated. However, either such locks cannot be easily set to a different combination, or they are limited in the number of combinations possible. In addition, the prior art does not include locks which are easily programmed and reprogrammed and can provide control electrical output signals.

SUMMARY OF THE INVENTION

Briefly, a programmable lock embodying the invention includes a plurality of separately programmable key sections formed as a unit and adapted to operate with a plurality of separately programmable lock sections and formed as a unit with each lock unit having an associated key unit. Means are provided for coupling electrical power to the entire unit in various ways and extracting signals in various ways to add to the programming flexibility of the apparatus.

DESCRIPTION OF THE DRAWINGS:

FIG. **1** is a perspective exploded view of the lock of the invention;

FIG. **2** is a perspective exploded view of the key portion of the lock of FIG. **1**;

FIG. **3** is a side elevational view of the key portion of FIG. **2** shown assembled;

FIG. **4** is a side view of the key section of FIG. **2** showing some of the parts assembled;

FIG. **5** is a perspective exploded view of the lock section of the lock of FIG. **1**;

FIG. **6** is a side elevational view showing portions of two lock sections coupled together;

FIG. **7** is a side elevational view of a portion of a lock section with some of its parts assembled;

FIG. **8** is a side elevational view of a lock section showing some of its parts assembled;

FIG. **9** is a schematic representation of a lock section and a key section as they appear assembled and in operative relation;

FIG. **10** is a schematic representation of a plurality of lock and key sections when assembled and one circuit connection arrangement in which they can be used;

FIGS. **11** to **14** are schematic representations of a complete lock unit and various circuit connection arrangements that can be made therewith;

FIG. **15** is a schematic circuit showing one mode of operation of the lock unit of the invention; and

FIG. **16** is a schematic representation of another circuit for using the lock unit of the invention;

FIG. **17** is a truth table for the FIG. **16** operation.

DESCRIPTION OF THE PREFERRED EMBODIMENTS

A programmable lock **10** (FIG. **1**) embodying the invention comprises a lock portion **14** made up of a plurality of lock sections **300** and a key portion **16** made up of a plurality of key sections **20** coupled together and operable as a programmable lock unit having a large number of possible combinations, depending on the number of lock and key sections provided, as will be clear to those skilled in the art.

A single key section **20** is shown exploded in FIG. **2** and includes matching and mating right and left insulator rings **30** and **30'**, each having a flat outer surface **40, 40'** and an inner surface **50, 50'** in which are formed ten generally cylindrical spaced slots **60, 60'** having conical bases **70, 70'** (FIGS. **2** and **3**). Each slot **60, 60'** is separated by a wall portion or web **80, 80'**. Each insulating ring also includes an enlarged projecting tab **90, 90'** which includes a channel **100, 100'** in which is formed a contact receiving form or pedestal **110, 110'**. A metal key contact **120** is seated in each of the slots **60,** and each contact is preferably cylindrical to match the cylindrical slots **60, 60'**, and each contact **120** has a generally conical end **122** which rests in a mating conical depression **70, 70'** at the base of each slot **60, 60'** (FIG. **3**). Thus, when the two insulator sections **30, 30'** are put together to form a key section (FIG. **3**), the contacts **120** are held securely in place in the cylindrical slots **60, 60'**, with their ends in the conical depressions **70, 70'** at the bases of the slots. A power input contact **130,** which is formed of a metallic strip suitably bent and shaped into a generally U-shaped section, is seated on the forms **110, 110'** in the tab portions **90, 90'**. The contact **130** has curved end surfaces which project out of the front and rear ends of the slots **100, 100'** so that contact can be made thereto in a manner to be described.

The insulator rings **30, 30'** have generally circular central openings **140, 140'** (FIG. **2**) in which is seated an insulating disc **150,** called a program cam, having a bore **160** of hexagon shape or the like and having an outer surface **170** which is generally smoothly curved except for a step portion **180** formed therein. A metallic program ring **190** is threaded on the program cam **150,** and includes an arm **200** which engages the step **180** in cam **150** and a pair of tabs **210, 220** which protrude from its outer surface and can engage one of the key contacts **120** or power input contact **130** (FIG. **4**). When tabs or arms **210, 220** contact one of the key contacts **120,** then the body of ring **190** contacts terminal **130** (FIGS. **4** and **8**). The tabs **210, 220** are of different lengths to prevent their jamming during programming of each key section which is accomplished by rotating cam **150** and ring **190** to place tabs **210, 220** in contact with a selected contact **120** or contact **130.** The parts of the key section are held together by means of rivets **230** or the like which extend through the insulating rings **30, 30'** (FIG. **3**).

The key portion **16** is made up of a plurality of sections **20** of the type described above, all mounted on a rod **240** (FIG. **1**) which includes a shaft **250** of hexagonal cross-section shape to receive the program cams **150,** having hexagonal bores. The mounting rod also has, at one end, a numbered ring portion **260** and a finger-gripping portion **270** to permit rotation of the shaft. The opposite end **280** of the shaft **250** is threaded to receive a lock nut **290** to lock the key sections **20** in place thereon.

Each lock section **300** (FIG. **5**) includes an insulating ring member **310** having a base portion **314** which includes oppositely disposed apertured mounting tabs **340.** An annular pedestal **360** rises from the front surface **350** of base member **310.** The rear surface **320** of base **310** is provided with an annular depression **330** (FIG. **6**) for receiving a metal contact ring **333** having a terminal **335,** and the front surface of base **310** is provided with an annular depression **363** for receiving a

metal contact ring **376** having a terminal **378.** The annular pedestal **360** has ten spaced portions of reduced thickness **370,** each of which is adapted to receive and hold a generally U-shaped metal lock contact **380.** A similar U-shaped metal contact **390** having a projecting terminal portion **400** is mounted on its portion **370'** in the pedestal **360,** with terminal **400** seated in a depression **403** in base **314** so that it is beneath, spaced from and insulated from metal ring **376.** An insulating pad **410** is disposed on terminal **400,** and it rests between terminal **400** and ring **376** (FIG. **7**).

Depressions **330** and **363** in the base **314** for metal rings **333** and **376** are not required, and other arrangements may be provided for seating these rings and relating them to contact **390.**

Referring to FIG. **5,** an insulating program ring **420,** provided surrounding the pedestal **360,** includes ten selector numerals on its outer surface and annular depressions **430** and **440** in its inner surface adjacent to its outer opposite surfaces. One depression **430** receives a split metal contact ring **450,** and the other depression **440** receives a split metal contact ring **460** having an inwardly projecting arm **470.** The split contact ring **450** and contact ring **370** are of such dimension and shape that, when the program ring **420** is in place on the pedestal **310,** as illustrated in FIG. **6,** the split contact ring **450** makes electrical contact with the ring **370.** Similarly, the second contact ring **460** and ring **333** are of such size and dimension that, when two insulator lock rings **310** are placed side by side in a lock assembly, ring **460** makes contact with the ring **333** on the rear surface **320** of the adjacent insulator ring member **310.** In addition, arm **470** of split ring **460** makes contact with one lock contact **380** (FIG. **8**), and split ring **450** makes contact with all of the other lock contacts **380.**

The lock portion **14** of programmable lock **10** includes a plurality of lock sections **300** equal in number to the number of key sections **20** in the key portion **16.** The lock sections are held together by means of suitable fasteners **343** inserted in the aligned apertured tabs **340** in each lock section.

A lock **10** includes a plurality of key sections and a plurality of lock sections. As noted, for convenience, the lock **10** has a decimal numberal base, and there are ten key contacts **120** and ten lock contacts **380** in each key and lock section. Accordingly, each program ring **420** carries numerals **1** to **10** on its outer surface, and in each section, rings **430** and **440** are so positioned that the numerals **1** to **10** are properly aligned with the similarly designated lock and key contacts. This permits the lock and key sections to be programmed as desired.

The lock **10** is used as follows. First, each lock section is set by rotating each program ring **420** to bring it into a desired setting in which tab **470** of ring **460** is brought into contact with a selected lock contact **380** and to place ring **450** in contact with all of the other lock contacts **380.** This provides a desired lock setting for each lock section. Now, each key portion **20** is set so that it will operate with the corresponding lock portion when the key is inserted in the lock. This is done by rotating each core **150** so that tabs **210** and **220** of each ring **190** contact a selected key contact **120** which corresponds to the selected lock contact **380** of the associated lock section. Thus, if lock section "**1**" has ring **470** in contact with the first lock contact **320,** then the key section "**1**" has tabs **210** and **220** of ring **190** in contact with the first key contact **120.** Similarly, if lock section "**2**" has ring **470** in contact with the third lock contact **320,** then the key section "**2**" has tabs **210** and **220** of ring **190** in contact with the third key contact **120.** The other related lock and key sections are similarly properly programmed.

As noted, each ring **190** in each key section (FIG. **2**) contacts power input contact **130** to which a power source V is connected.

The principles of the mode of operation of the invention are illustrated schematically in FIG. **9** for a simple lock including one key and one lock section. If the lock section and key section match, when the key is inserted in the lock, power is connected from voltage source V through input contact **130,** ring **190,** tabs **210** and **220,** key contact **120,** lock contact **380** which key contact **120** contacts, ring **460** and ring **333** to an external circuit which may include a relay **500** for operating a door or the like.

It is clear that, if the lock and key sections were not programmed properly so that the selected lock contact **380** did not contact the corresponding key contact **120,** then the required output signals would not be provided and the door relay would not be operated.

Another more complex mode of operation of the invention is illustrated in FIG. **10** for a three-section lock **10,** only portions of which are shown. In this case, two output rings **333** are operative, and they are connected through an AND gate **510** to apparatus such as the door relay **500.** Again, if the lock and key sections match properly, the two outputs from rings **333** operate the AND gate and provide an output signal to operate the door relay. On the other hand, if the key does not match the lock, the AND gate is not operated, and the door relay is not operated.

It will be clear to those skilled in the art that a lock embodying the invention has many possible programs, and it may be used in many different types of circuits. In addition, a circuit may be devised to provide an alarm signal if a non-matching key is inserted in a programmed lock. This is described below.

Some of the possible program modes of operation of the invention are illustrated in FIGS. **11** to **15.** The lock illustrated in FIG. **11** includes n sections, with each section including ten lock and key sections, only some of which are shown. Section **1** has its lock program ring **420** programmed so that the first lock contact designated **380A** is contacted by ring **460** which contacts ring **333** (not shown). A lead **520A** is connected through tab **335** on ring **333** to ring **460** and to the lock contact **380A.** All of the other lock contacts **380** are connected together by ring **450** (not shown), which contacts ring contact **376** (not shown) and has a lead **530A** connected to its tab **378.**

In lock section **2,** the program ring **420** is set to contact the second lock contact **380B,** and this portion of the lock has its output lead **520B.** The other lock contacts **380** are connected together and have their output lead **530B.** The other lock sections are programmed as desired, and the nth section is programmed as shown.

Now, referring to the key sections in FIG. **11,** they are all programmed to mate properly with the lock, and, accordingly, section **1** has the tabs **210** and **220** of ring **190** in contact with the first key contact **120A.** In addition, in section **1,** ring **190** is connected through its

contact **130** (not shown) and power input terminal **390** to a source of operating potential V by a lead **540.** Section **2** has the tabs **210** and **220** of ring **190** in contact with the second key contact **120B**, and the other key sections are similarly programmed to match the lock sections.

In the circuit arrangement illustrated in FIG. **11**, the sections are interconnected by having lead **520A** of the selected program position in section **1**, the first position, connected to the power input terminals **390** of each of the other sections by lead **550** whereby power is coupled from source V to all of the sections of the lock. In adddition, each of the leads **520** B to N and **530** has an output terminal at which a signal or voltage can be detected if one is present. Thus, in operation of the arrangement of FIG. **11**, when the key is inserted in the lock, the indicated circuits are completed and all of the output leads **520** B to N show potential V at their output terminals and the leads **530** show no potential. If leads **520** are connected to a circuit such as that shown in FIG. **10**, a door can be opened or some other operation can be performed.

FIG. **12** illustrates another arrangement for electrically connecting the sections of a lock. In FIG. **12**, the selected lock and key positions are connected in series so that the circuit includes power source V connected by lead **540** to power input contact **390** to the selected second key contact **120B** and to the second lock contact **380B** and the various contact rings to lead **520A**. Lead **520A** is connected to turn to power input terminal **390** of the second section and through the selected first key and lock contacts to output lead **520B**. Then output lead **520B** is connected in series with the programmed key and lock contacts of the third section, etc., with lead 520^{n-1} of the n−1 section being connected to power input contact **390** to the selected third key contact **120C** and to the corresponding lock contact **300C** and output lead **520A** of the nth key and lock section.

In operation of the arrangement of FIG. **12**, when the key is inserted in the lock, the series circuit shown is completed and potential appearing on output lead **520N** can be used to operate a door relay or the like.

In another circuit arrangement illustrated in FIG. **13**, the voltage input source V is coupled in parallel to the power input terminals **390** of all of the sections, and, when lock and key sections match as shown, an output potential appears on all leads **520.** As described above, all leads **520** can be coupled to an AND gate and to a door relay or the like.

FIG. **14** illustrates the circuit situation when a key does not match the lock in which it is inserted. For purposes of illustration, all of the key and lock sections match; however, the nth sections do not match. In this case, all of the output leads **520** except the last provide the required output signal; however, the last does not. Accordingly, an AND gate to which the outputs **520** are connected will not receive a potential on lead **520N** and will not provide the required output signal to operate a door relay. Referring to section n, the output lead **530N** connected to the lock contacts to which the key contact **120A** is connected carries a potential which can be used to energize an alarm or the like.

In the arrangement shown in FIG. **15**, all of the lock sections have their program rings **420** set so that rings **460** and their contact rings **333** all contact power input terminals **390.** The matching key similarly has all of its contact rings **190** in contact with the power input terminal **130** and none of the key contacts. In the circuit arrangement of FIG. **15**, input voltage source V is connected by lead **540** to terminal **400** of input terminal **390** and thus to ring **460** and ring **333** and by lead **520A** to all of the terminals **390.**

As noted above, a lock **10** can be connected in a circuit for properly opening a door or the like when the key matches the lock or providing an alarm if there is a mismatch of any kind. One such alarm circuit, shown in FIG. **15**, includes a connection from each programmed lock contact **380** (not shown) and its ring contact **333** through a resistive path **570** to a bus **580** which runs to ground. The bus **580** is coupled to the base of an NPN transistor **590** which has its emitter connected to one end of a load **600** such as a door relay. The ground side of the bus **580** is also connected (1) to the collector of PNP transistor **610**, (2) through a resistive path **620** to the base of the transistor **610**, and (3) through a resistive path **630** to the lead **640** between the emitter of transistor **590** and the door relay **600.** The emitter of transistor **610** is also connected to the other end of the door relay. The rings **376** which are connected to unselected contacts in the lock are coupled by lead **650** to the base of transistor **610** and to an alarm **660.**

In operation of the circuit of FIG. **15**, transistor **590** is held OFF by the biases applied thereto and transistor **610** is biased to be ON and conducting. When a key is inserted into the lock and all sections match, the potential applied to the base of transistor **590** through the paths **570** causes transistor **590** to turn on and conduct and complete a current flow path through door relay **600** and ON transistor **610.** If one or more of the key sections does not match the lock, positive potential is applied through a ring **376** to the base of transistor **610** which is turned off, opens the load circuit, prevents the door relay from operating, and operates the alarm **660.**

Another alarm circuit shown in FIG. **16** has all of the selected outputs from a multi-section lock represented by lines A, B, C, D, connected as inputs to an exclusive OR gate **670** and to an AND gate **672.** The non-selected outputs of the lock are connected together to two inputs of an OR gate **674**, the output of which is coupled to one input of an exclusive OR gate **676** and to the alarm device **660.** The output of the exclusive OR gate **670** is coupled to one input of a NAND gate **678** and to both inputs of an AND gate **680.** The output of the NAND gate **678** is coupled to two inputs of a NAND gate **682**, the output of which is coupled to one input of an exclusive OR gate **684**, the output of which is coupled to the alarm device **660.** The output of the AND gate **680** is coupled to the second input of the exclusive OR gate **684.** The output of the AND gate **672** is coupled to the second input of the NAND gate **678** and to the second input of the exclusive OR gate **676**, the output of which is coupled to the lock opening mechanism or relay represented by block **600.**

The operation of the circuit of FIG. **16** is represented by the truth table of FIG. **17** in which numerals **1** to **9** represent the outputs of the various gates of FIG. **16.** The truth table shows that, when A, B, C, D, etc., have the same polarity signal and E has the opposite polarity, then the various gates have the polarities shown, and

the lock is operated in normal fashion. Another other combination of signals operates the alarm.

It is to be noted that the illustrations of the invention in the various figures of the drawings may not be dimensionally exact and some parts may be omitted in various figures. However, these drafting expedients are taken to simplify the illustration of the invention and to facilitate the understanding of the invention by one reading the specification.

What is claimed is:

1. An electromechanical programmable lock comprising

an annular lock section and an annular key section removably disposed within said lock section,

said lock section having a plurality of first electrical lock contacts,

means in said lock section for selectively connecting one of said first electrical lock contacts in a first circuit, such selective connection comprising pre-programming of said lock section,

said key section having a plurality of second electrical key contacts, each of which contacts one of said lock contacts, and

means in said key section for selectively connecting one of said second electrical key contacts in a second circuit, such selective connection comprising pre-programming of said key section, whereby a selected first lock contact and a selected second key contact can be pre-programmed to match so that, when the pre-programmed key section is inserted into and matches the pre-programmed lock section, said first circuit and said second circuit are connected and operate as a permitted state for the programmable lock.

2. An electromechanical programmable lock comprising

a plurality of annular lock sections coupled together as a lock unit and a plurality of annular key sections coupled together as a key unit, said key unit being removably disposed within said lock section,

each said lock section of said lock unit having a plurality of first electrical lock contacts,

separate means in each said lock section for selectively connecting one of said first electrical lock contacts therein to a separate first circuit, such connection of a lock contact to a first circuit comprising pre-programming of such lock contact,

each said key section of said key unit having a plurality of second electrical key contacts which contact corresponding ones of said first electrical lock contacts, and

separate means in each said key section for selectively connecting one of said second electrical key contacts therein to a separate second circuit, such connection of a key contact to a second circuit comprising pre-programming of such key contact,

each said key section mating mechanically and being in operative relation with a lock section to form a key-lock pair when said lock unit is inserted in said key unit, whereby in each key-lock pair, a selected first lock contact and a selected second key contact can be pre-programmed to match so that, when the key unit is inserted into the lock unit and all of the pre-programmed key-lock pairs match, each said first circuit and each said second circuit of each key-lock pair are connected together and operate as a permitted state for the programmable lock.

3. The apparatus defined in claim **2** wherein each said key section includes a generally annular insulating member having a central aperture and an array of apertures disposed about its annular body with a metal key contact disposed in each such aperture,

a program member rotatably disposed in said central aperture of each said key section and comprising an insulating member having a generally curved outer surface having a step therein,

a metal ring threaded on said program member of each key section and having a portion engaging said step and contact portions adapted to engage one of said key contacts, and

an electrical contact mounted on each said annular member and making contact with its associated conductive ring and accessible outside said annular member for connection to an electrical circuit.

4. The apparatus defined in claim **2** wherein each said lock section includes an annular member having a central aperture and having a generally planar base and a pedestal rising therefrom, a plurality of lock contacts seated on said pedestal and disposed about the annular body thereof, there being one lock contact for each of said second electrical contacts which are key contacts,

a first contact ring seated on the top surface of said base of each annular member,

a second contact ring seated on the bottom surface of said base of each annular member,

a terminal member mounted on each said pedestal and having a portion extending from said annular member, and

a rotatable program ring seated on each said pedestal and carrying a first split ring adapted to contact all but one of the associated lock contacts and the associated first contact ring,

each said program ring also carrying a second split ring having a portion adapted to contact said one of said first lock contacts and said second contact ring of the adjacent lock section.

5. The apparatus defined in claim **2** wherein each said lock section includes an annular insulating lock member having a central aperture and having a generally planar base and a pedestal rising therefrom, a plurality of lock contacts seated on said pedestal and disposed about the annular body thereof, there being one lock contact for each of said second electrical contacts which are key contacts,

a first contact ring seated on the top surface of said base of each annular lock member,

a second contact ring seated on the bottom surface of said base of each annular lock member,

an electrical terminal member mounted on each said pedestal and having a portion extending from said annular lock member for making electrical connection thereto,

a rotatable program ring seated on each said pedestal and carrying a first conductive member adapted to contact all but one of the associated lock contacts and the associated first contact ring,

each said program ring also carrying a second conductive member having a portion adapted to contact said one of said first lock contacts and said second contact ring of the adjacent lock section,

each said key section includes a generally annular insulating key member having a central aperture and an array of apertures disposed about its annular body with a metal key contact disposed in each such aperture, each key contact touching one of said lock contacts,

a program member rotatably disposed in said central aperture of each said key section and comprising an insulating disk having a generally curved outer surface having a step therein,

a metal selector ring threaded on said program member and having a portion engaging said step and contact portions adapted to engage a selectable one of said key contacts by rotation of said program member, and

an electrical contact mounted on said annular key member and making contact with said metal selector ring and accessible outside said annular key member for connection to an electrical circuit.

6. An electromechanical programmable lock comprising

a plurality of lock sections formed as a unit and a plurality of key sections formed as a unit, with said unit of key sections inserted in said unit of lock sections and with each key section mating with an associated lock section, there being first, second, third, fourth, . . . and n^{th} lock and key sections,

each lock section including a plurality of lock contacts disposed in a serial array,

lock program means in each lock section for selecting one of said lock contacts and connecting it in an electrical circuit,

each said key section including a plurality of key contacts disposed in a serial array with each key contact touching one of said lock contacts,

key program means in each key section for selecting one of said key contacts and connecting it in said electrical circuit whereby an electrical circuit is completed between a selected key contact in each key section and a selected lock contact in the associated lock section.

7. The apparatus defined in claim **6** wherein, in each lock section, the selected lock contact is connected to an external operating circuit.

8. The apparatus defined in claim **6** wherein each key section includes a key input terminal to which an external circuit can be connected.

9. The apparatus defined in claim **7** wherein said external circuit includes a relay for performing an operating function as determined by the mating of said key and lock units.

10. The apparatus defined in claim **7** and including an AND gate, to the input of which each of said selected lock contacts is connected, said AND gate having its output connected to a control circuit which is operated when said key and lock sections match in the programs and said AND gate receives signals representative of such matching.

11. The apparatus defined in claim **6** wherein the selected lock contact of the first lock section is connected to the selected key contacts of all of the other key sections of said lock,

all of the other selected lock contacts of the other lock sections being connected to a separate output lead on which an output signal may appear.

12. The apparatus defined in claim **6** wherein an input potential is coupled to the selected key contact of said first key section,

the selected lock contact of said first section being connected to the selected key contact of said second key section,

the selected lock contact of said second section being connected to the selected key contact of said third key section and so forth, with the selected key and lock contacts of all of the sections being connected in a series electrical circuit.

13. The apparatus defined in claim **6** and including an input circuit connected in parallel to the selected key contact of all of said key sections, and

a separate output lead from the selected lock contact of each of said lock sections.

14. The apparatus defined in claim **6** wherein the selected lock contact of each said lock section is connected through an electronic switch, which is normally closed, to a utilization device,

a plurality of non-selected lock contacts connected to an alarm circuit whereby when said lock and key sections match in their selected contacts, said electronic switch operates said utilization device but when said lock and key sections do not match in their selected contacts, said alarm circuit operates.

* * * * *