Sept. 21, 1948. G. P. KELTON 2,449,605

ROTARY CYLINDRICAL SPLITTER AND PLANER HEAD

Filed Oct. 12, 1946 2 Sheets-Sheet 1

Fig. 1.

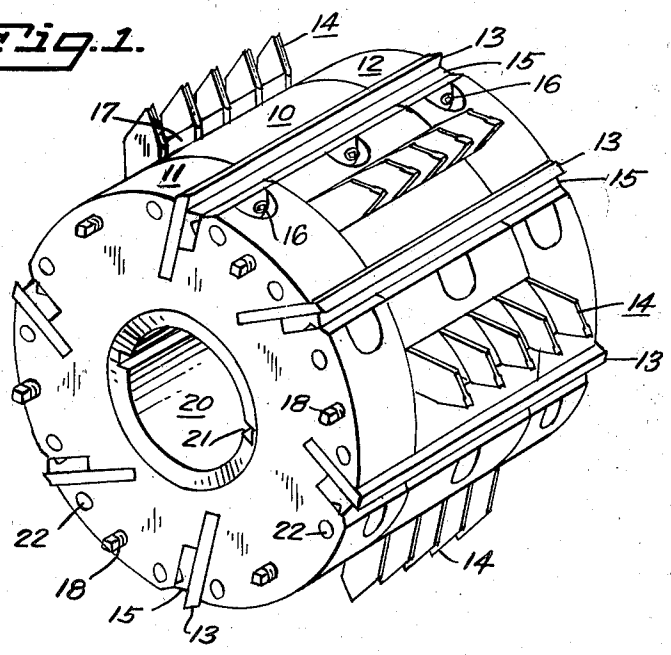

Fig. 2.

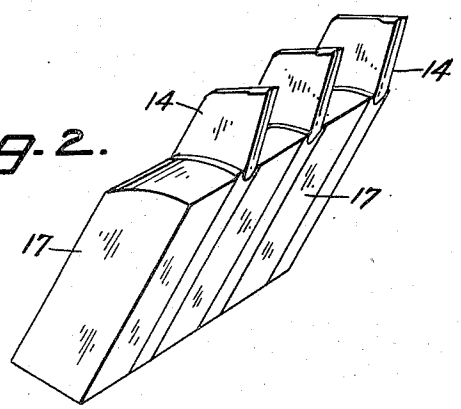

INVENTOR.
GILBERT P. KELTON

BY
Charles McFryer
ATTORNEY

Sept. 21, 1948. G. P. KELTON 2,449,605

ROTARY CYLINDRICAL SPLITTER AND PLANER HEAD

Filed Oct. 12, 1946 2 Sheets-Sheet 2

Fig. 3.

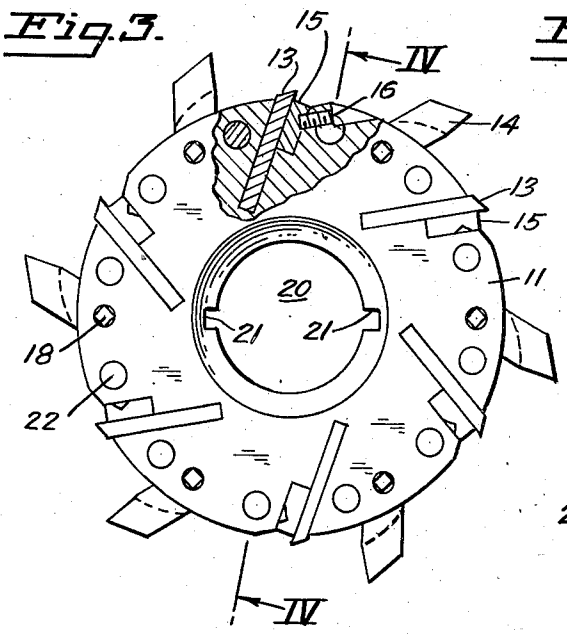

Fig. 4.

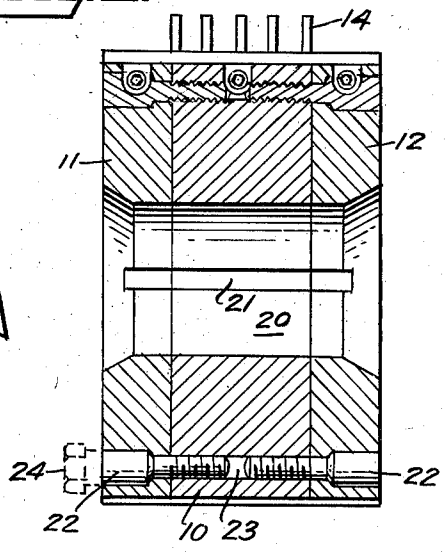

Fig. 5.

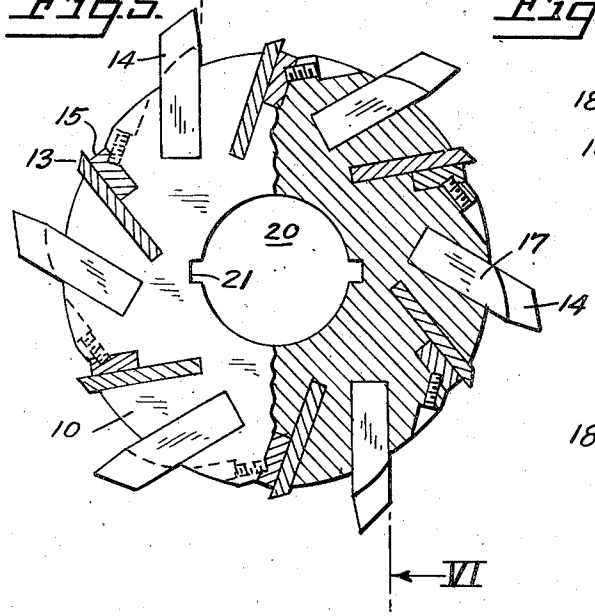

Fig. 6.

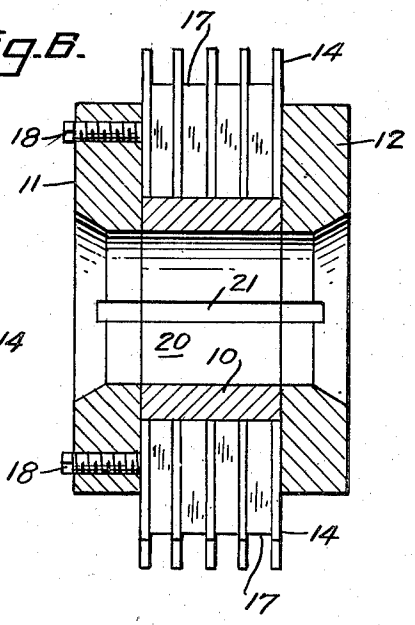

INVENTOR.
GILBERT P. KELTON

BY
Charles M. Fryer
ATTORNEY

Patented Sept. 21, 1948

2,449,605

UNITED STATES PATENT OFFICE

2,449,605

ROTARY CYLINDRICAL SPLITTER AND PLANER HEAD

Gilbert P. Kelton, Dorris, Calif.

Application October 12, 1946, Serial No. 702,918

2 Claims. (Cl. 144—230)

1

This invention relates to splitter heads of the kind employed in the lumber industry for cutting small strips or moldings from larger boards.

A conventional type of splitter head comprises a cylindrical head member adapted to be mounted on and rotated by a shaft or arbor in the manner of a planer head. The splitter head carries circumferentially spaced planer knives and circumferentially spaced groups of splitter blades disposed alternately with relation to the knives and projecting radially outwardly a greater distance than the knives. The arrangement of the knives and blades is such that upon passing a single board beneath the rotating head it is at once planed to a predetermined thickness by the planer blades and split or cut into a plurality of strips by the knives. Various forms of moldings or irregularly shaped strips can be cut by a splitter head by grinding the knives and blades to required shapes. This is, however, common practice and the present invention will be described and illustrated in its simpler form wherein the knives and blades are substantially straight as for the production of strips of simple rectangular cross section.

Because of the high speed at which splitter heads are desirably operated, it is preferable that the overall diameter be small rather than large. It is also preferable that the head carry as great a number of sets of knives and blades as possible because the speed and smoothness of the work depends upon the number of cuts per revolution of the head. For example, a board can be fed to a six bladed head fifty per cent faster than to a four bladed head operating at the same speed without sacrificing quality of work. As each planer blade and each set of splitting knives is received within a pocket or recess formed in the head, there is a practical limit to the number of blades and knives that can be mounted in a single conventional head without weakening the head beyond limits of safety for high speed rotary operation.

It is therefore an object of the present invention to provide a splitter head or similar tool of improved construction which enables the use of a large number of blades and knives without sacrificing compactness and strength. Another object of the invention is the provision of a splitter head of the kind referred to with a head portion made up of three parts to simplify machining operations and in which the parts are secured together in a novel manner to satisfy requirements of strength.

Further and more specific objects and advantages of the invention are made apparent in the

2

following specification wherein reference is made to the accompanying drawings for a detailed disclosure of one form which the invention may assume.

In the drawings:

Fig. 1 is a perspective view of a splitter head embodying the present invention;

Fig. 2 is a perspective view of a portion of a group of splitter knives and spacers of the kind employed in the head shown in Fig. 1;

Fig. 3 is a view in end elevation of the head shown in Fig. 1;

Fig. 4 is a sectional view taken on the line IV—IV of Fig. 3;

Fig. 5 is a view in end elevation with parts in section of the central or body portion of the head shown in Fig. 1; and

Fig. 6 is a sectional view taken on the line VI—VI of Fig. 5.

In Fig. 1 of the drawings the splitter head of the present invention is shown as made up of a central cylindrical body portion 10 and end portions 11 and 12 secured thereto. The cylindrical head which includes the portions 10, 11 and 12 carries alternately and equally spaced planer blades 13 and sets of splitter knives 14. The planer blades are received in slots disposed transversely of the head so that the cutting edges project therefrom. They are held in place by gibs 15 received in enlarged portions of said slots and gib screws 16 by means of which pressure is applied to the gibs and planer blades to hold the latter in place. The splitter knives 14 are received in pockets together with spacers 17 as shown in Fig. 2 and the pockets which hold the sets of knives 14 and spacers 17 are formed in the central portion 10 only of the head so that side walls for the pockets are provided by the end members 11 and 12. Set screws 18 (see Figs. 1 and 6) pass through the side member 11 in positions to engage the ends of the groups of knives and spacers to hold each group securely in its pocket.

In operation a splitter head such as illustrated in Fig. 1 is mounted on a mandrel which is passed through a central opening 20 and fixed against rotation by means of keys, not shown, for which key slots 21 are provided. The head so mounted for rotation is disposed over a conventional table, and a board passed over the table beneath the head is at once planed to a predetermined thickness by the planer blades 13 and split into strips of a width depending upon the number and arrangement of the knives 14 and spacers 17.

One of the advantages of the splitter head herein disclosed is that it is made up in three

parts so that the pockets which receive the knives 14 and spacers 17 may be milled in the central part 10 without weakening the side members 11 and 12. These slots are milled before assembly of the center and side members and after they are assembled and secured together the slots which receive the blades 13 and gibs 15 are milled through the entire head. Even with this construction, a head of relatively small diameter which has six sets of splitter knives and six planer blades as illustrated in Fig. 5 is reduced in strength at its central portion because of the proximity of the slots which receive the blades and knives. It is apparent, therefore, that the tightening of the gib screws 16 toward the slots which retain the planer blades would tend to distort the head because of the proximity of the slots which retain the splitter knives. This apparent weakness of construction is overcome by the present invention by providing the end members 11 and 12 of sufficient thickness that each may retain one of the three gib screws employed for securing each of the planer blades in place. Thus, while the central gib screw 16 shown in Fig. 5 is illustrated as disposed in a relatively weak portion of the central head member 10, the two outer gib screws as shown in Fig. 1 are disposed in the end members 11 and 12 which are not intercepted by slots for reception of the splitter knives and are, therefore, much greater in strength.

The side members 11 and 12 are of necessity firmly secured in place against the central member 10 and as welding is impractical for this purpose because of its tendency to distort the metal of which the members are made, the following means are employed. Each of the side members is drilled for a plurality of shoulder screws 22 (see Figs. 1, 3 and 4) which extend into tapped holes 23 formed in the central member. The slots which receive the planer blades and cutter knives are substantially equally spaced throughout the periphery head so that space is provided for at least one of the shoulder screws 22 between each set of blades and each knife. The shoulder screws 22 are preferably originally in the form of a cap screw having a head such as indicated in dotted lines at 24 in Fig. 4 so that they may be applied and tightened with a wrench. With all of the shoulder screws thus set tightly in place, the heads are removed and machined flush with the outer faces of the plates 11 and 12. The spacing of alternate shoulder screws 22, namely, the ones that are disposed just ahead of the planer blades is such that they are cut through or intercepted when holes are bored for reception of gib screws 16 as shown in Figs. 3 and 4. Consequently, these shoulder screws are positively held by the gib screws against rotation or loosening. The alternate shoulder screws which are placed just ahead of the pockets which receive the splitter knives 14 in spacers 17 are

frictionally held against loosening movement by the outward pressure exerted upon tightening the set screws 18 which hold the knives and spacers in place.

One of the principal advantages of the present construction is that the splitter head, produced in three parts as herein illustrated, is sufficiently strong to enable the use of a greater number of planer blades and splitter knives for a head of a given diameter. Another advantage is that the head is simple to manufacture because no pockets with closed ends have to be formed in a single piece of metal, as the closed end pockets which receive the splitter knives are formed as slots extending all of the way through the central portion of the head before the sides are assembled in place.

While as hereinbefore stated, the construction and arrangement of the planer blades and splitter knives herein described is of a simple form, it will be apparent that knives and blades of various shapes may be employed in a splitter head of this design to effect variation in the size, number and shape of strips of moldings that are cut from a single board.

I claim:

1. A splitter head of the character described having a cylindrical head member made up of three separable sections, a center section and two end sections, pockets for splitter knives formed in the center section only, slots for planer blades extending through all of the sections, and gib screws carried by the end sections for securing the planer blades in their slots.

2. A splitter head of the character described having a cylindrical head member made up of a center section and two end sections, pockets for splitter knives formed in the center section only, slots for planer blades extending through all of the sections, said slots and pockets being alternately arranged and substantially uniformly spaced throughout the periphery of the head, and screws securing the end sections to the center section and arranged in all of the spaces between said slots and pockets and gib screws carried by the end sections for securing the planer blades in their slots and intersecting alternate pairs of the end section securing screws.

GILBERT P. KELTON.

REFERENCES CITED

The following references are of record in the file of this patent:

UNITED STATES PATENTS

Number	Name	Date
362,625	Hewit	May 10, 1887
1,245,726	James	Nov. 6, 1917
1,803,741	Walthers et al.	May 5, 1931
2,192,522	Misuraca	Mar. 5, 1940