(12) INTERNATIONAL APPLICATION PUBLISHED UNDER THE PATENT COOPERATION TREATY (PCT)

(19) World Intellectual Property Organization
International Bureau

(43) International Publication Date
3 October 2002 (03.10.2002)

PCT

(10) International Publication Number
WO 02/076854 A1

(51) International Patent Classification[7]: B65D 83/54, 83/34

(21) International Application Number: PCT/US02/08323

(22) International Filing Date: 19 March 2002 (19.03.2002)

(25) Filing Language: English

(26) Publication Language: English

(30) Priority Data:
60/278,890 26 March 2001 (26.03.2001) US

(71) Applicant: **3M INNOVATIVE PROPERTIES COMPANY** [US/US]; 3M Center, P.O. Box 33427, Saint Paul, MN 55133-3427 (US).

(72) Inventors: **CASTRO, Gustavo, H.**; P.O. Box 33427, Saint Paul, MN 55133-3427 (US). **HERDTLE, Thomas**; P.O. Box 33427, Saint Paul, MN 55133-3427 (US). **ARSENAULT, Cathleen, M.**; P.O. Box 33427, Saint Paul, MN 55133-3427 (US). **DAVIS, Antony, J.**; P.O. Box 33427, Saint Paul, MN 55133-3427 (US).

(74) Agents: **GRAM, Christopher, D.** et al.; Office of Intellectual Property Counsel, P.O. Box 33427, Saint Paul, MN 55133-3427 (US).

(81) Designated States *(national)*: AE, AG, AL, AM, AT, AT (utility model), AU, AZ, BA, BB, BG, BR, BY, BZ, CA, CH, CN, CO, CR, CU, CZ, CZ (utility model), DE, DE (utility model), DK, DK (utility model), DM, DZ, EC, EE, EE (utility model), ES, FI, FI (utility model), GB, GD, GE, GH, GM, HR, HU, ID, IL, IN, IS, JP, KE, KG, KP, KR, KZ, LC, LK, LR, LS, LT, LU, LV, MA, MD, MG, MK, MN, MW, MX, MZ, NO, NZ, OM, PH, PL, PT, RO, RU,

[Continued on next page]

(54) Title: METERING VALVE FOR A METERED DOSE INHALER HAVING IMPROVED FLOW

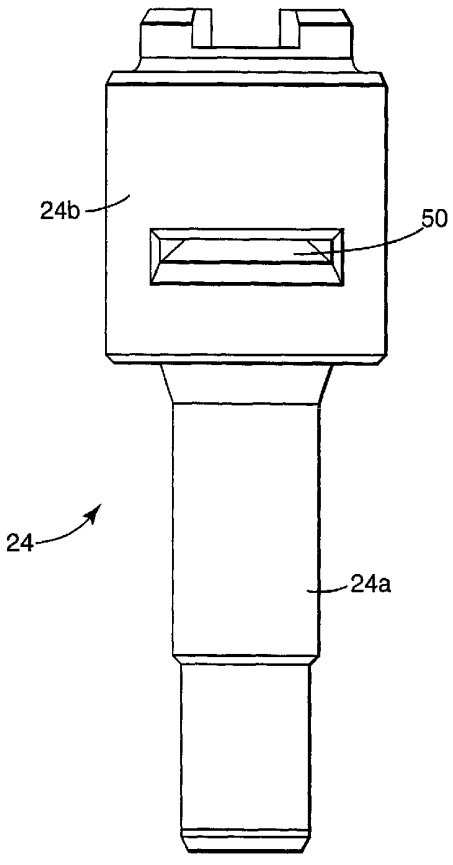

(57) Abstract: A novel metering valve having improved flow for delivery of an aerosol formulation is disclosed. Methods of delivering an aerosol formulation using a device comprising the novel metering valve are also disclosed.

WO 02/076854 A1

SD, SE, SG, SI, SK, SK (utility model), SL, TJ, TM, TN, TR, TT, TZ, UA, UG, UZ, VN, YU, ZA, ZM, ZW.

(84) Designated States *(regional)*: ARIPO patent (GH, GM, KE, LS, MW, MZ, SD, SL, SZ, TZ, UG, ZM, ZW), Eurasian patent (AM, AZ, BY, KG, KZ, MD, RU, TJ, TM), European patent (AT, BE, CH, CY, DE, DK, ES, FI, FR, GB, GR, IE, IT, LU, MC, NL, PT, SE, TR), OAPI patent (BF, BJ, CF, CG, CI, CM, GA, GN, GQ, GW, ML, MR, NE, SN, TD, TG).

Published:

— *with international search report*

— *before the expiration of the time limit for amending the claims and to be republished in the event of receipt of amendments*

For two-letter codes and other abbreviations, refer to the "Guidance Notes on Codes and Abbreviations" appearing at the beginning of each regular issue of the PCT Gazette.

METERING VALVE FOR A METERED DOSE INHALER HAVING IMPROVED FLOW

Background

Metering valves are a common means by which aerosols are dispensed from aerosol containers. Metering valves are particularly useful for administering medicinal formulations that include a liquefied gas propellant and are delivered to a patient in an aerosol.

When administering medicinal formulations, a dose of formulation sufficient to produce the desired physiological response is delivered to the patient. The proper, predetermined amount of the formulation must be dispensed to the patient in each successive dose. Thus, any dispensing system must be able to dispense doses of the medicinal formulation accurately and reliably to help assure the safety and efficacy of the treatment.

Metering valves have been developed to provide control over the dispensing of medicinal aerosol formulations. A metering valve may be used to regulate the volume of a medicinal formulation passing from a container to a metering chamber, which defines the maximum amount of the formulation that will be dispensed as the next dose. The precise dosage metered by the metering chamber may be dependent, in part, upon the physical conditions under which the medicinal formulation is permitted to fill the metering chamber. Reliable and controllable flow of the medicinal formulation into the metering chamber may contribute to the accuracy and/or precision of the metering of successive doses of the formulation. Thus, reliable and controllable flow of the medicinal formulation into the metering chamber may improve performance of the metering valve and, therefore, may be highly desirable.

In some metering valves, the metering chamber fills with the medicinal formulation prior to the patient actuating the valve stem and thereby releasing the dose. The metering chamber is refilled with formulation after dispensing one dose so that the metering valve is ready to discharge the next dose. Consequently, the metering chamber contains formulation at all times except for the brief time during which the valve stem is depressed by the user to discharge a dose. Also, the passageways through which the formulation

must flow to reach the metering chamber are often narrow and tortuous. As a result, metering valves configured in this way have a number of disadvantages resulting in, for example, erratic dosing due to loss of prime, i.e., the occurrence of vapor or air voids in the metered volume, which may leading to a shortfall in the volume of dose being metered by the valve.

In other metering valves, the metering chamber does not materialize unless and until the valve stem is actuated. Actuation of these valve stems can be divided into a filling stage and a discharge stage. The filling stage begins as the valve stem is depressed during actuation. The action of depressing the valve stem causes the formation of a transient metering chamber. As the valve stem is depressed, the transient metering chamber expands and formulation enters the metering chamber. As displacement of the valve stem continues, a stage is reached at which filling of the transient metering chamber stops. Eventually, displacement of the valve stem continues to the discharge stage, in which the metered formulation is discharged. In these valves, a single actuation thus causes rapid filling of the transient metering chamber followed by discharge of the formulation to the patient. Thus, the metered formulation does not reside for any appreciable amount of time in the metering chamber.

While a metering valve having a transient metering chamber provides advantages over other types of metering valves for the delivery of aerosol formulations, the flow of formulation from the container to the metering chamber may be disrupted. When this happens, formulation may be delivered in inconsistent or inaccurate doses.

What is needed is a valve stem for a metered dose inhaler that improves flow of formulation into the metering chamber, thereby providing consistent, accurate, dosages of formulation, even when actuated rapidly.

Summary

It has been determined that one cause of disrupted flow of formulation may be due to the design of the valve stem in the metering valve. A seal typically isolates the metering chamber from the aerosol container once the correct volume of formulation has been metered. To accomplish this, the seal must occlude the flow path, through which formulation must pass in order to fill the metering chamber, as the valve stem is depressed

beyond the filling stage. As used herein, occlude refers to at least a partial closing off of an opening by a seal, gasket, or diaphragm. In certain metering valves, the passageways leading from the container to the metering chamber can begin to become occluded well before the formulation has completed filling the metering chamber. This effectively begins to cut off flow of formulation into the metering chamber while the valve stem is still in the filling stage of actuation.

Also, the design of the valve stem may cause regions of recirculation or localized low pressure to develop in the flow of formulation into the metering chamber. Such low pressure regions can lead to incomplete metering of the formulation by allowing bubbles to form in the metered volume, particularly when the patient actuates the valve rapidly or rapid actuation occurs due to the mechanism of a breath actuated device.

The present invention provides a valve stem for a metered dose inhaler that improves the flow of formulation into the metering chamber. The novel stem design has a short, but circumferentially widened channel opening that, in many embodiments, enhances the flow of formulation into the metering chamber. Accordingly, the present invention provides an aerosol valve stem including a body that includes a body wall defining an internal chamber; at least one inlet port through the body wall in fluid communication with the internal chamber; a channel opening in the body wall having a height and a width wherein the width is greater than the height; and at least one channel providing fluid communication between the internal chamber and the channel opening.

In some embodiments, the valve stem may include a plurality of channel openings in the body wall. In these embodiments, the plurality of channel openings may define a cumulative width that is greater than the height of the channel openings.

In another aspect, the present invention provides a method of delivering an aerosol dose of medicine including providing an inhaler that includes an aerosol valve stem including: a body that includes a body wall defining an internal chamber, at least one inlet port through the body wall in fluid communication with the internal chamber, a channel opening in the body wall having a height and a width wherein the width is greater than the height, at least one channel providing fluid communication between the internal chamber and the channel opening; providing a formulation of aerosol medicine contained within the inhaler; and actuating the inhaler.

In yet another aspect the present invention provides a metering valve that includes a housing that includes an internal chamber defined by one or more chamber walls, the internal chamber comprising an outlet aperture; a diaphragm positioned at the outlet aperture and in sealing engagement with at least a portion of the housing; a metering gasket in sealing engagement with one or more chamber walls; a valve stem including: i) a body that comprises a body wall defining an internal chamber, ii) at least one inlet port through the body wall in fluid communication with the internal chamber, iii) a channel opening in the body wall having a height and a width wherein the width is greater than the height, and iv) at least one channel providing fluid communication between the internal chamber and the channel opening, wherein the valve stem passes through the aperture in slidable sealing engagement with both of the diaphragm and the metering gasket; and an annular space having a width defined by a distance between the chamber wall and the valve stem.

In some embodiments, the valve stem may include a plurality of channel openings in the body wall. In these embodiments, the plurality of channel openings may define a cumulative width that is greater than the height of the channel openings. In certain embodiments, the height of at least one channel opening may be from about 1 to about 5 times the width of the annular space.

Brief Description of the Drawings

FIG. 1 is a cross-sectional view of a metered dose inhaler including the aerosol valve of the present invention.

FIG. 2 is an enlarged cross-sectional view of the aerosol valve of the present invention in the resting position.

FIG. 3 is an enlarged cross-sectional view of the aerosol valve of the present invention during the filling stage of valve stem actuation.

FIG. 4 is an enlarged cross-sectional view of the aerosol valve of the present invention in the filled stage of valve stem actuation.

FIG. 5 is an enlarged cross-sectional view of the aerosol valve of the present invention during the discharge stage of valve stem actuation.

FIG. 6a is a side view of an alternative embodiment of the aerosol valve stem of the present invention.

FIG. 6b is a view of a half section of an alternative embodiment of the aerosol valve stem of the present invention.

FIG. 7 is an enlarged cross-section of an alternative embodiment of the aerosol valve stem of the present invention.

FIG. 8 is an enlarged cross-section of another alternative embodiment of the aerosol valve stem of the present invention.

FIG. 9 is an enlarged cross-section of another alternative embodiment of the aerosol valve stem of the present invention.

Detailed Description of the Invention

The following description is set forth in terms of aerosol metering valves used to dispense an aerosol formulation from an aerosol container. However, the metering valves and methods of the present invention have application to the delivery of virtually any pressurized fluid in an accurate, metered dose. In particular, the metering valves described herein are useful for dispensing medicinal aerosol formulations.

When used to dispense medicinal aerosol formulations, the metering valves of the present invention may be used to administer virtually any aerosol formulation of drug into a body cavity of a patient, such as the mouth, nose, anus, vagina, ears, or onto the eyes or any skin area of the patient. However, the present invention is not limited to medicinal applications and may be used wherever a precise amount of material from a pressurized fluid is to be delivered to a given region.

Referring to FIG. 1, an aerosol dispensing apparatus, generally designated as **10**, is illustrated that incorporates one embodiment of a metering valve **14** in accordance with the present invention. The top end of the metering valve **14** is crimped around the end of a conventional aerosol container **12**, while a conventional discharge piece **16** is mounted around the bottom of the metering valve **14**. Thus, aerosol formulation is dispensed downwardly from the aerosol container **12**, through the metering valve **14**, then through the discharge piece **16** where it is delivered to a patient. The discharge piece **16** directs the aerosol formulation toward the body cavity or skin area to which the formulation is to be

delivered. The configuration of the discharge piece **16** depends upon the application for the aerosol. For example, discharge piece **16** may be a mouthpiece that can be inserted into the patient's mouth, thereby providing oral administration of the aerosol formulation. The aerosol-dispensing device shown in FIG. 1 is merely one example of how a metering valve according to the present invention can be incorporated into a dispensing apparatus.

In each of FIGS. 2-5, a metering valve is shown in isolation for ease of illustration. However, the metering valves shown in these figures may be combined with an aerosol container **12**, discharge piece **16**, or both, as shown in FIG. 1.

Referring to FIG. 2, the metering valve **14** is shown in the resting position. The metering valve **14** includes a housing **20** that serves to house the various components of the metering valve **14**. The top portion of the housing **20** attaches to the aerosol container **12** (as shown in FIG.1). A valve body **22** is seated within the valve housing **20** and in turn provides a housing for a valve stem **24**.

The metering valve **14** may include a spring cage **58** defining an interior chamber **38**, a portion of which is occupied by the valve stem **24**. One or more inlets **44** provide open and unrestricted fluid communication between the interior chamber **38** and the aerosol container **12**.

The valve stem **24** includes two portions, identified as **24***a* and **24***b*. The external portion of the valve stem **24***a* is that portion of the valve stem **24** that is positioned outside the valve housing **20** while the valve stem **24** is in the resting position shown in FIG. 2. During actuation of the valve stem **24**, however, at least some of the external valve stem **24***a* is displaced inwardly with respect to the metering valve **14**, as described more fully below, so that a portion of the external valve stem **24***a* is transiently positioned inside the valve housing **20**. The internal valve stem **24***b* is that portion of the valve stem **24** that is positioned within the valve housing **20** throughout actuation of the valve stem **24**.

The external valve stem **24***a* includes a passageway through which a metered dose of formulation is discharged, as will be described more fully below. The passageway may include one or more side holes **28**, a discharge passageway **26** and a discharge opening **30**.

The internal valve stem **24***b* may be configured to have substantially the same shape as, but to be slightly smaller than, the surrounding wall of the valve body **22***a*. Thus, a narrow annular space **32** may be formed between the valve body wall **22***a* and the

internal valve stem **24***b*. In certain embodiments in which the valve stem **24** and the valve body wall **22***a* are both circular in cross-section, the narrow annular space **32** may form a ring. However, the valve stem **24** and valve body wall **22***a*, and therefore the narrow annular space **32**, may be any suitable shape. The internal valve stem **24***b* includes an interior space **36** defined by the walls of the valve stem **24**. One or more channels **34** are formed in the walls of the internal valve stem **24***b* and provide fluid communication between the interior space **36** and the narrow annular space **32** through one or more channel openings **50**.

In the resting position shown in FIG. 2, the internal valve stem **24***b* fits concentrically inside the valve body **22** and provides sufficient clearance for the narrow annular space **32**. Accordingly, only a small percentage of the metering chamber volume is present in the metering valve **14** while it is in the resting position shown in FIG. 2. As will be described in greater detail below, when the valve stem **24** is actuated, the valve stem **24** is displaced into the interior chamber **38** of the metering valve **14** and a space is created between the internal valve stem **24***b* and the floor of the valve body **22***b*. The space thus created is the metering chamber **60**, as shown in FIG. 3.

In the embodiment shown in FIG. 2, a spring **48** is provided within the interior chamber **38** of the metering valve. The spring **48** serves to bias the valve stem **24** toward the resting position shown in FIG. 2. However, any suitable means for biasing the valve stem **24** into the resting position shown in FIG. 2 may be used in connection with the present invention.

The metering valve **14** also includes at least two annular gaskets, the housing gasket **54** and the metering gasket **56**. The housing gasket **54** is positioned between the valve housing **20**, the valve body **22** and the valve stem **24**, as shown in FIG. 2. The housing gasket **54** isolates the formulation in the aerosol container **12** from the exterior of the valve by forming two fluid tight seals: 1) an annular seal between the housing gasket **54** and the valve stem **24** where the valve stem extends out of the valve housing, and 2) a compressive planar or face seal between the housing gasket **54** and the housing **20**. The latter seal may be effected either with or without a sealing bead **62** on either the valve body **22** or the housing **20**.

The valve body **22** may include an angled shoulder **22***c*, which is best seen in FIG. 3 and is designed to support the housing gasket **54** near the valve stem **24** while functioning to direct the flow of formulation out of the metering chamber **60** during the discharge stage shown in FIG. 5. The valve stem **24** may include an angled shoulder **24***c* designed to match the profile of the valve body **22**, thereby minimizing the amount of formulation present in the metering chamber **60** in the resting position shown in FIG. 2.

The metering gasket **56** may be positioned between the valve body **22**, the spring cage **58**, and the internal part of the valve stem **24***b*. The metering gasket **56** transiently isolates the formulation in the metering chamber **60** from the aerosol container **12**, as shown in FIGS. 4 and 5, by forming two fluid tight seals: 1) an annular seal between the metering gasket **56** and the internal part of the valve stem **24***b*, and 2) a compressive planar or face seal between the metering gasket **56** and the valve body **22**. The latter seal may be effected either with or without a sealing bead **64** on either the valve body **22** or the spring cage **58**. The metering gasket **56** provides a means for terminating the flow of formulation from the aerosol container **12** to the metering chamber **60** during actuation of the valve stem **24**, as will be described in more detail below.

The operation of the metering valve **14** shown in FIG. 2 is illustrated in FIGS. 3, 4 and 5. The figures illustrate the stages of operation of the metering valve **14** and the corresponding relative positions of the valve components as a patient actuates the valve stem **24**, thereby releasing a dose of aerosol formulation. FIG. 3 shows the metering valve **14** in the filling stage, FIG. 4 shows the metering valve **14** in the filled stage, and FIG. 5 shows the metering valve **14** in the discharge stage.

FIG. 3 illustrates the filling stage of the metering valve **14**. The valve stem **24** has been displaced inwardly into the interior chamber **38** against the compressive force of the spring **48**. As the valve stem **24** is displaced inwardly, the proximal end of the external stem **24***a* enters the valve housing **20** such that an annular space, the metering chamber **60**, is formed between the valve body **22** and the valve stem **24**. The volume of the metering chamber **60** increases as the valve stem is displaced. Displacement of the valve stem **24** typically continues until the valve stem **24** reaches a "filled" position, depicted in FIG. 4.

The aerosol formulation enters the metering chamber **60** in the following manner. Formulation from the aerosol container **12** passes through the one or more metering valve

inlets **44** and into the interior chamber **38** of the metering valve. From the interior chamber **38**, the formulation passes through the valve stem inlet port **40** and enters the valve stem interior space **36**. Formulation then passes through one or more channels **34**, one or more channel openings **50** and the narrow annular space **32**, into the metering chamber **60**. Consequently, as the valve stem **24** is moved from the resting position shown in FIG. 2 to the filling stage shown in FIG. 3, aerosol formulation passes from the aerosol container **12** to the metering chamber **60** immediately upon actuation of the valve stem **24**. Formulation continues to fill the metering chamber **60** until the metering valve **14** reaches the filled stage depicted in FIG. 4.

FIG. 4 illustrates the metering valve **14** in the filled stage. The flow path of formulation from the aerosol container **12** to the metering chamber **60** becomes occluded as the metering gasket **56** moves past the channel opening **50**. Ultimately, the channel opening **50** is fully occluded by the metering gasket **56**, as shown in FIG. 4, and the flow of formulation into the metering chamber **60** is cut off, thereby concluding filling of the metering chamber **60**.

Upon further actuation, the metering gasket **56** forms a fluid seal around the valve stem **24** that prevents any additional flow of formulation to the metering chamber **60**. At this stage, the metered dose of formulation is isolated and ready for discharge from the metering chamber **60** and delivery to the patient. The dimensions of the valve body **22**, valve stem **24** and other valve components determine the volume of the metering chamber **60** in the filled position depicted in FIG. 4. The valve body **22**, valve stem **24** and other valve components may be designed to permit largely unimpeded flow of formulation during the filling stage while preventing unintended continuous discharge of formulation subject to the dimension tolerances of the valve components.

FIG. 5 depicts the metering valve **14** in the discharge stage of actuation. In order to discharge the metered dose of aerosol formulation from the metering chamber **60**, the valve stem **24** may be further actuated to the position illustrated in FIG. 5. The distance traveled by the valve stem **24** between FIG. 4 and FIG. 5 may result in an expansion of the metering chamber volume without adding to the metered dose of formulation because of the seal formed between the metering gasket **56** and the valve stem **24**, described above. The extra travel ensures that the metering gasket **56** is sealed against the valve stem **24**

before the one or more side holes **28** enter the metering chamber **60**. This extra travel thus serves to allow for dimensional variations in the valve components.

As the valve stem **24** is fully actuated, the one or more side holes **28** of the discharge passageway **26** pass through the housing gasket **54** and come into fluid communication with the metering chamber **60**. That fluid communication allows the aerosol formulation within the metering chamber **60** to be released into the one or more side holes **28** and the formulation thus passes through the discharge passageway **26** and out of the discharge opening **30**, thereby delivering the metered dose of aerosol formulation to the patient or other desired area.

During the discharge of the aerosol formulation from the metering chamber **60** as shown in FIG. 5, the metering gasket **56** continues to prevent the passage of additional bulk formulation from the aerosol container **12** to the metering chamber **60**. After the dose of aerosol formulation is discharged, the patient releases the valve stem **24**, which returns to its original resting position depicted in FIG. 2 by the biasing action of the spring **48**.

The successive stages of valve stem actuation depicted in FIGS. 2, 3, 4 and 5 are all accomplished during the brief duration of actuation of the valve stem **24**. Accordingly, formation, filling and emptying of the metering chamber **60** occurs rapidly. Only a small percentage of a dose of formulation resides in the metering chamber **60** between discharges, and the metering chamber **60** contains a fully metered dose of formulation only for a brief moment immediately prior to discharge of the dose from the metering chamber **60**. Subsequent release of the valve stem by the patient allows the valve to return from the position depicted in FIG. 5 to that depicted in FIG. 2.

Because the valve body **22**, valve stem **24** and other valve components together define the volume of the metering chamber **60**, the metering valve components may be designed to form a metering chamber **60** having an appropriate metering volume for any desired application. Furthermore, metering valves having different capacities may be manufactured by, for example, altering the relative position of the channels **34** and channel opening **50** along the wall of the internal valve stem **24***b*. The volume of the metering chamber **60** at any moment is defined, in part, by the extent to which the valve stem **24** is displaced inwardly with respect to the metering valve **14**.

The volume of the metering chamber **60** at the moment that the metering gasket **56** fully occludes the channel opening **50** defines the filling capacity of the metering chamber **60**. Therefore, a metering valve in which the metering gasket **56** fully occludes the channel opening **50** relatively early in the displacement of the valve stem **24** will have a smaller filling capacity than a metering valve in which the metering gasket **56** fully occludes the channel opening **50** relatively late in displacement of the valve stem **24**.

The channel opening **50** is defined by an axial dimension and a circumferential dimension as shown in FIG. 6a. As used herein, the axial dimension, or height, is the dimension parallel to the direction of displacement of the valve stem **24** during actuation. As used herein, the circumferential dimension, or width, is the dimension parallel to the circumference of the valve stem **24**.

In one embodiment, at least one channel opening **50** has a cross-sectional width that is greater than its height, thereby constituting a wide, short channel opening **50**. Certain embodiments of the present invention have a channel opening having a height of about 0.25 mm, some have a channel opening with a height of about 0.5 mm, and other embodiments may have a channel opening having any height ranging from about 0.01 mm to about 1.0 mm. Embodiments having a channel opening having a height from about 0.1 mm to about 0.8 mm have been identified as being particularly useful.

Certain embodiments of the present invention may have multiple channel openings **50**. In such embodiments, the multiple channel openings may form a discontinuous functional equivalent of the channel opening **50** of the present invention even though no individual channel opening has a width greater than its height. In such an arrangement, the sum of the channel opening widths may define a cumulative width. Such embodiments having multiple channel openings **50** that define a cumulative circumferential width that is greater than the height of the openings are included in the scope of the present invention.

Certain other embodiments may have a single channel opening **50** that completely encircles the valve stem **24**. In these embodiments, the width of the channel opening **50** essentially equals the circumference of the valve stem **24**. An example of such an embodiment is depicted in FIG. 6b, which shows a view of a half section of a valve stem **24**. While the channel opening **50** completely encircles the valve stem **24**, one or more internal supports **76** join two halves of the valve stem. Sophisticated internal geometries

may be manufactured by forming the valve stem **24** as two separate components that can be joined together. The components may be joined by any suitable means such as press-fitting or crimping, for example. In the embodiment shown in FIG. 6b, a lug **74** on the upper part of the valve stem **24** fits into a corresponding hole in the lower part of the valve stem **24**.

A short channel opening height maximizes the proportion of the displacement of the valve stem **24** during actuation before the metering gasket **56** begins to occlude the channel opening **50**. Thus, nearly all of the formulation enters the metering chamber **60** via steady flow before the channel opening **50** begins to be fully occluded by the metering gasket **56**. This may reduce the potential effects of actuation speed with respect to filling performance. A channel opening **50** covering a large portion of the circumference of the valve stem **24** allows a large cross-sectional area for filling the annular space **32**, thereby increasing the reliability and precision of the metering of the formulation. A channel opening having the combination of a wide circumference and short height may provide a desirable balance between maximizing the cross-sectional surface area of the channel opening and also maximizing the proportion of the distance the valve stem **24** travels before the channel opening **50** begins to become occluded by the metering gasket **56**.

The relationship between height of the channel opening **50** and the width of the narrow annular space **32** also may influence the filling characteristics of the metering valve **14**. Generally, a channel opening height of about one to about five times the width of the narrow annular space **32** permits steady flow of the formulation into the metering chamber **60** until approximately one half of the channel opening **50** is occluded by the metering gasket **56**. Certain embodiments of the present invention include a channel opening height that is about three times the width of the annular space **32**.

A channel opening height of greater than about five times the width of the annular space **32** may cause recirculation of flow as the metering chamber **60** fills. As used herein, recirculation refers to flow circulating or flowing back against the general direction of the flow path in a localized region within a moving fluid. Recirculating formulation may interrupt the steady flow of formulation, at least in the vicinity of the recirculating flow. This may result in at least a temporary decrease in the effective cross-sectional area of the

channel opening **50** available to conduct flow of formulation, thereby reducing the rate at which formulation is allowed to flow into the metering chamber **60**.

The channel **34** may intersect the channel opening **50** (the channel angle) at about a 0° angle with respect to the horizontal plane of the valve stem, as shown in FIG. 7, or at an inclined angle, as shown in FIG. 8. In one embodiment, similar to that shown in FIG. 7, the channel **34** may intersect with the channel opening **50** at about a 0° angle relative to the horizontal plane of the valve stem **24** and have a channel opening **50** measuring about 0.25 mm in height and about 280° of the valve stem circumference. An alternative embodiment may have a channel opening height of about 0.5 mm.

The channel angle may range from about +90° to about -90° with respect to the horizontal plane of the valve stem. An angled channel **34** may help direct the flow formulation into the narrow annular space **32** (see FIG. 3). This, in turn, may minimize the region of low pressure that may develop as the formulation passes through the channel opening **50** and into the narrow annular space **32**. Such regions of low pressure can increase the likelihood of bubble formation within the formulation. In one embodiment, similar to that shown in FIG. 8, the channel angle may be about +45° relative to the horizontal plane of the valve stem **24** and the channel opening **50** may measure about 0.25 mm in height and about 160° of the valve stem circumference. An alternative embodiment may have a channel opening height of about 0.5 mm. Any channel angle from about 0° to and including about +90°, relative to the horizontal plane of the valve stem, may be suitable for a particular application, however.

In an alternative embodiment, a channel may intersect with the channel opening **50** at an angle from about 0° to about –90° with respect to the horizontal plane may be desired in certain embodiments. Such an embodiment, similar to that shown in FIG. 9, may have a channel angle of about -45° with respect to the horizontal plane of the valve stem, for example. Drug from a suspension formulation may form a sediment between dosings. In the embodiment shown in FIG. 9, such sedimented drug may preferentially collect on the floor of interior space **36**, thereby reducing sedimentation of drug in the channels **34**, the narrow annular space **32**, or both. The sedimented drug may be more readily resuspended into the formulation from the floor of the interior space **36** than from either the channels **34** or the narrow annular space **32** when the patient shakes the inhaler. Thus, such a valve

stem may promote more consistent, accurate dosing and more complete use of drugs in suspension formulations. Any channel angle from about 0° to and including about -90° may be suitable for a particular application.

In certain embodiments, one or more edges **72** of the channel opening **50** may be beveled or rounded, as shown in FIG. 7. Edges **72** modified in this way may provide a smooth transition of the flow path from the channel **34** into the narrow annular space **32**. This feature also may contribute to reducing the likelihood and extent to which localized regions of low pressure will develop in the flow of formulation. Consequently, beveled or rounded edges of the channel opening **50** may help reduce the likelihood of bubble formation within the formulation.

Various modifications and alterations to this invention will become apparent to those skilled in the art without departing from the scope and spirit of this invention. It should be understood that this invention is not intended to be unduly limited by the illustrative embodiments and examples set forth herein and that such examples and embodiments are presented by way of example only with the scope of the invention intended to be limited only by the claims set forth herein as follows.

What is Claimed is:

1. An aerosol valve stem comprising:

a body comprising a body wall defining an internal chamber;

at least one inlet port through the body wall in fluid communication with the internal chamber;

a channel opening in the body wall having a height and a width wherein the width is greater than the height; and

at least one channel providing fluid communication between the internal chamber and the channel opening.

2. The aerosol valve stem of claim 1 wherein the height of the channel opening is from about 0.01 mm to about 1.0 mm.

3. The aerosol valve stem of claim 2 wherein the height of the channel opening is from about 0.1 mm to about 0.8 mm.

4. The aerosol valve stem of claim 2 wherein the height of the channel opening is about 0.25 mm.

5. The aerosol valve stem of claim 1 wherein the channel opening completely encircles the valve stem.

6. The aerosol valve stem of claim 1 wherein the channel opening comprises at least one rounded edge or at least one beveled edge.

7. The aerosol valve stem of claim 1 wherein at least one channel intersects with at least one channel opening at an angle of from about +90° to about -90° relative to a horizontal axis of the valve stem.

8. The aerosol valve stem of claim 7 wherein at least one channel intersects with at least one channel opening at an angle of from about +45° to about -45° relative to a horizontal axis of the valve stem.

9. The aerosol valve stem of claim 7 wherein at least one channel intersects with at least one channel opening at an angle of about 0° relative to a horizontal axis of the valve stem.

10. An aerosol valve stem comprising:

a body comprising a body wall defining an internal chamber;

at least one inlet port through the body wall in fluid communication with the internal chamber;

a plurality of channel openings in the body wall, each channel opening having a height and a width wherein at least two channel openings define a cumulative width, and wherein the cumulative width is greater than the height; and

at least one channel providing fluid communication between the internal chamber and each channel opening.

11. The aerosol valve stem of claim 10 wherein the height of at least one channel opening is from about 0.01 mm to about 1.0 mm.

12. A method of delivering an aerosol dose of medicine comprising:

a) providing an inhaler that comprises a valve stem comprising:

i) a body comprising a body wall defining an internal chamber,

ii) at least one inlet port through the body wall in fluid communication with the internal chamber,

iii) a channel opening in the body wall having a height and a width wherein the width is greater than the height, and

iv) at least one channel providing fluid communication between the internal chamber and the channel opening;

b) providing a formulation of aerosol medicine contained within the inhaler; and

c) actuating the inhaler.

13. A method of delivering an aerosol dose of medicine comprising:

a) providing an inhaler that comprises a valve stem comprising:

i) a body comprising a body wall defining an internal chamber,

ii) at least one inlet port through the body wall in fluid communication with the internal chamber,

iii) a plurality of channel openings in the body wall, each channel opening having a height and a width wherein at least two channel openings define an cumulative width, and wherein the cumulative width is greater than the height, and

iv) at least one channel providing fluid communication between the internal chamber and each channel opening;

b) providing a formulation of aerosol medicine contained within the inhaler; and

c) actuating the inhaler.

14. A metering valve comprising:

a housing comprising an internal chamber defined by one or more chamber walls, the internal chamber comprising an outlet aperture;

a diaphragm positioned at the outlet aperture and in sealing engagement with at least a portion of the housing;

a metering gasket in sealing engagement with one or more chamber walls;

a valve stem comprising:

i) a body comprising a body wall defining an internal chamber,

ii) at least one inlet port through the body wall in fluid communication with the internal chamber,

iii) a channel opening in the body wall having a height and a width wherein the width is greater than the height, and

iv) at least one channel providing fluid communication between the internal chamber and the channel opening,

wherein the valve stem passes through the aperture in slidable sealing engagement with both of the diaphragm and the metering gasket; and

an annular space having a width defined by a distance between the chamber wall and the valve stem.

15. The metering valve of claim 14 wherein the height of the channel opening is from about 1 to about 5 times the width of the annular space.

16. The metering valve of claim 14 wherein the height of the channel opening is about 3 times the width of the annular space.

17. The metering valve of claim 14 wherein the height of the channel opening is from about 0.01 mm to about 1.0 mm.

18. The metering valve of claim 17 wherein the height of the channel opening is from about 0.1 mm to about 0.8 mm.

19. The metering valve of claim 17 wherein the height of the channel opening is about 0.25 mm.

20. The metering valve of claim 14 wherein the channel opening completely encircles the valve stem.

21. The metering valve of claim 14 wherein the channel opening comprises at least one rounded edge or at least one beveled edge.

22. The metering valve of claim 14 wherein at least one channel intersects with at least one channel opening at an angle of from about +90° to about -90° relative to a horizontal axis of the valve stem.

23. The metering valve of claim 22 wherein at least one channel intersects with at least one channel opening at an angle of from about +45° to about -45° relative to a horizontal axis of the valve stem.

24. The metering valve of claim 22 wherein at least one channel intersects with at least one channel opening at an angle of about 0° relative to a horizontal axis of the valve stem.

25. A metering valve comprising:

a housing comprising an internal chamber defined by one or more chamber walls, the internal chamber comprising an outlet aperture;

a diaphragm positioned at the outlet aperture and in sealing engagement with at least a portion of the housing;

a metering gasket in sealing engagement with one or more chamber walls;

a valve stem comprising:

i) a body comprising a body wall defining an internal chamber,

ii) at least one inlet port through the body wall in fluid communication with the internal chamber,

iii) a plurality channel openings in the body wall, each channel opening having a height and a width wherein at least two channel openings define a cumulative width, and wherein the cumulative width is greater than the height; and

iv) at least one channel providing fluid communication between the internal chamber and each channel opening,

wherein the valve stem passes through the aperture in slidable sealing engagement with both of the diaphragm and the metering gasket; and

an annular space having a width defined by a distance between the chamber wall and the valve stem.

26. The metering valve of claim 25 wherein the height of at least one channel opening is from about 1 to about 5 times the width of the annular space.

27. The metering valve of claim 25 wherein the height of at least one channel opening is about 3 times the width of the annular space.

28. The metering valve of claim 25 wherein the height of at least one channel opening is from about 0.01 mm to about 1.0 mm.

29. The metering valve of claim 28 wherein the height of at least one channel opening is from about 0.1 mm to about 0.8 mm.

30. The metering valve of claim 28 wherein the height of at least one channel opening is about 0.25 mm.

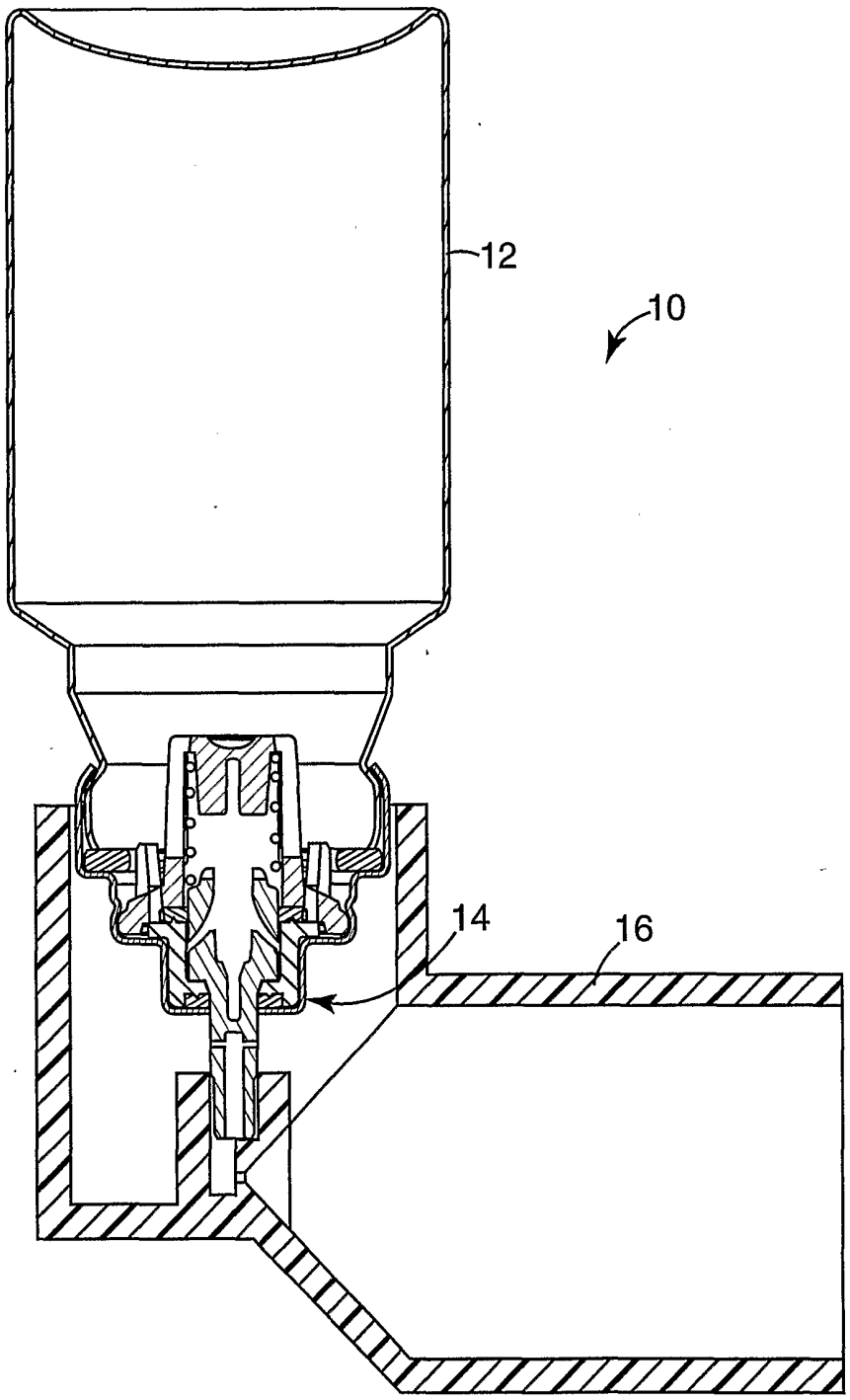

Fig. 1

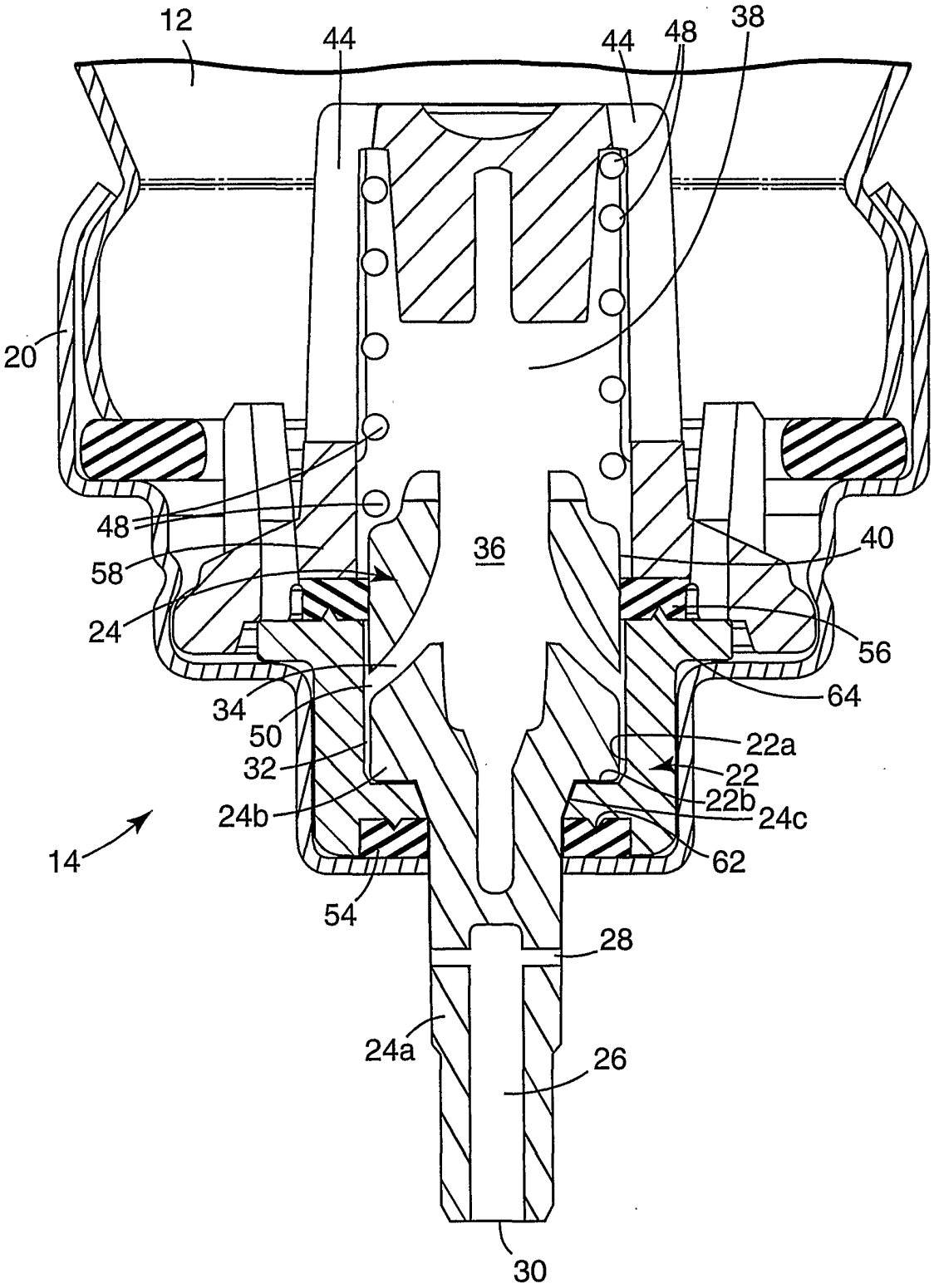
12
44
44
48
38
20
48
58
24
36
40
56
64
34
50
32
22a
22
22b
24c
24b
14
62
54
28
24a
26
30

Fig. 2

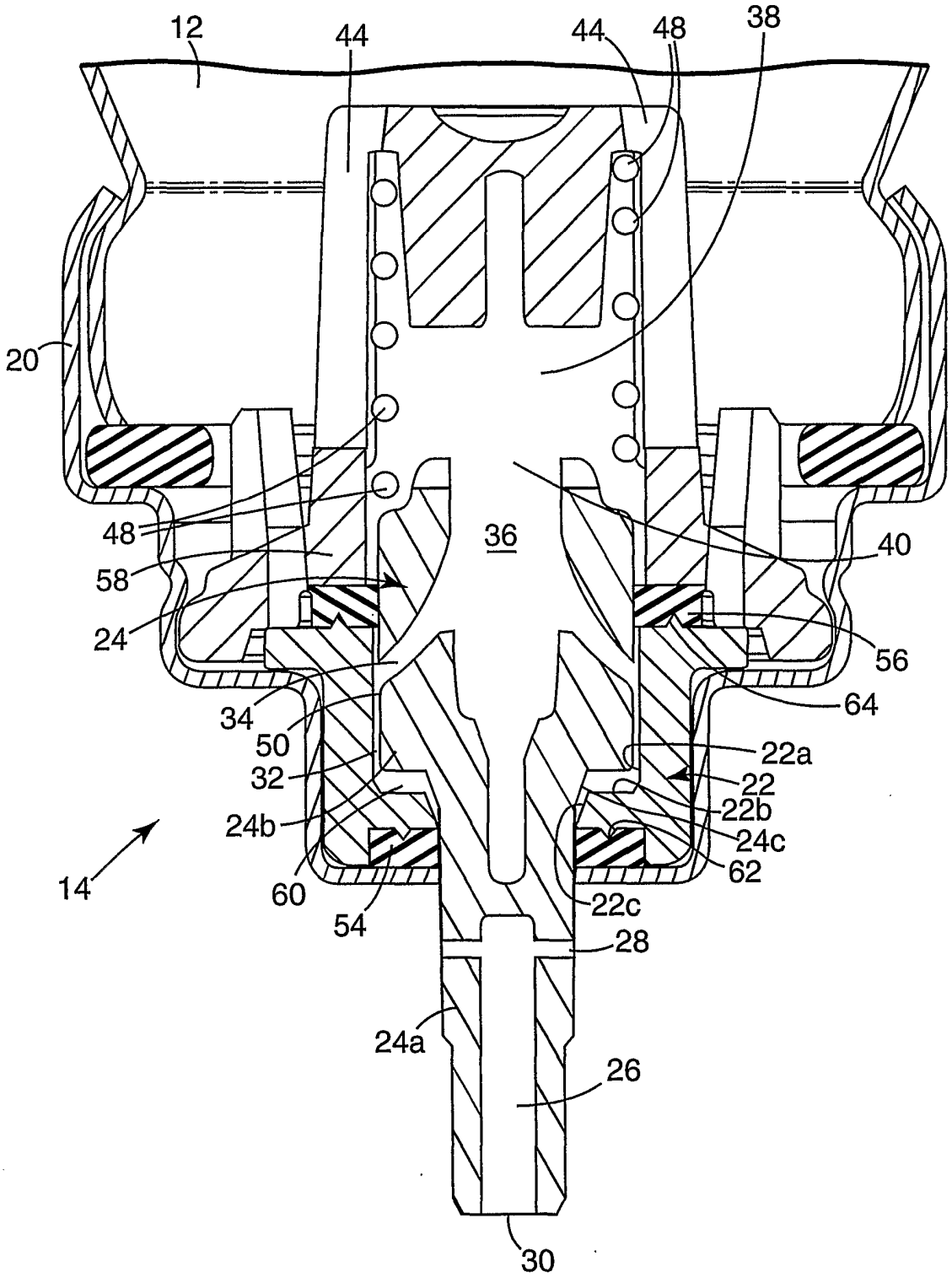
12
44
44
48
38
20
48
36
40
58
24
56
64
34
50
22a
32
22
24b
22b
24c
62
14
60
54
22c
28
24a
26
30

Fig. 3

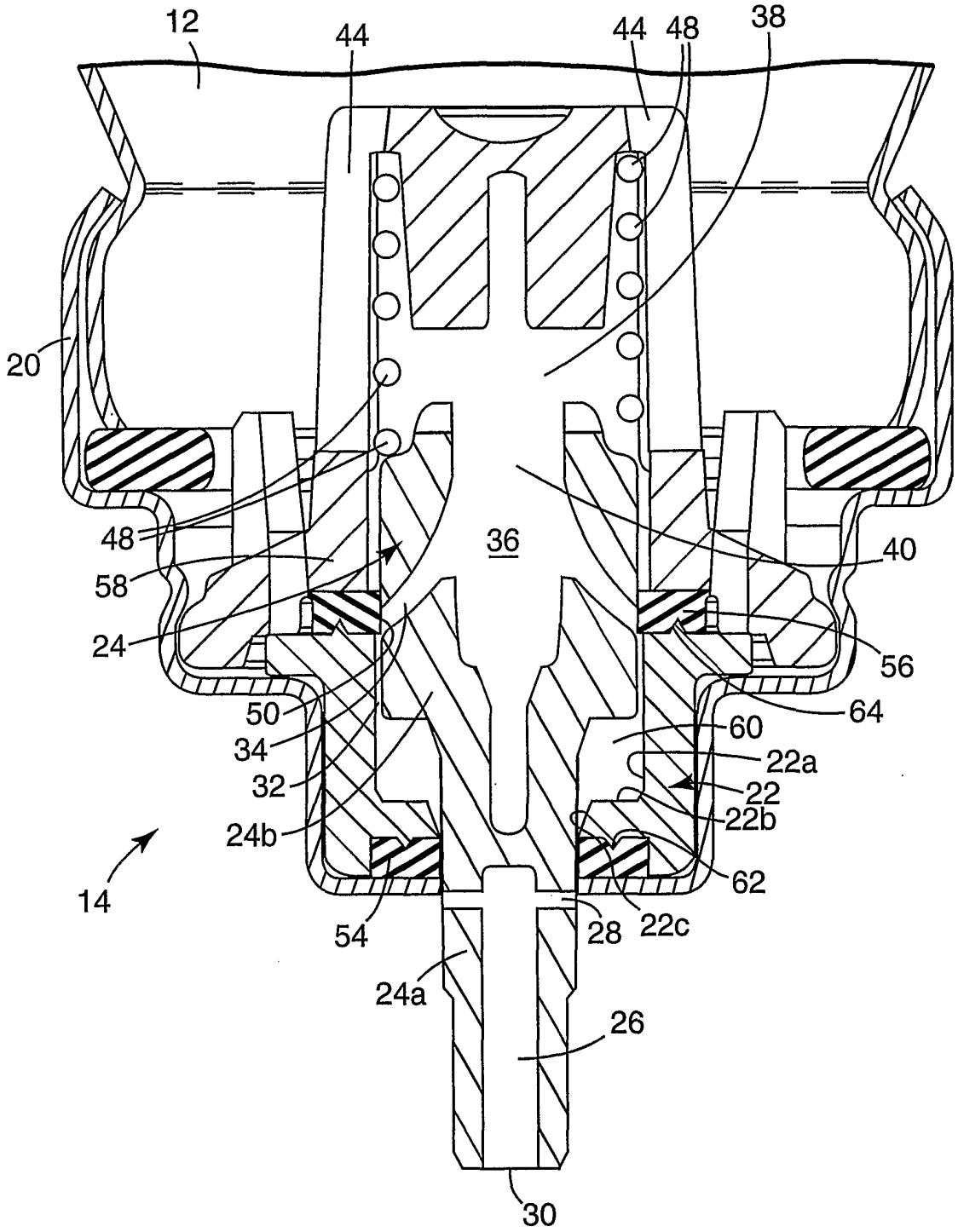
12
44
44
48
38
20
48
36
40
58
24
56
50
64
34
60
32
22a
22
24b
22b
14
62
54
28
22c
24a
26
30

Fig. 4

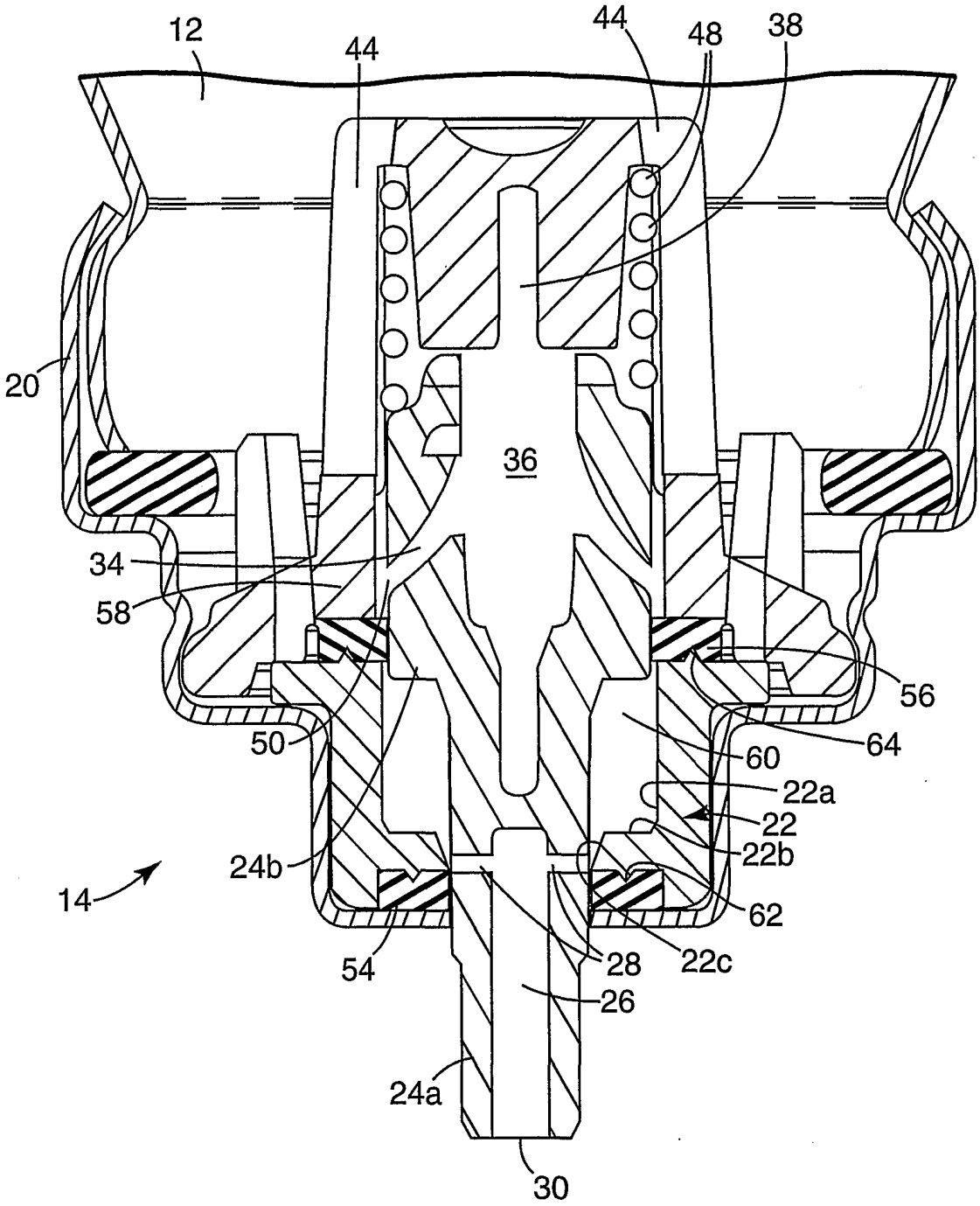
12
44
44
48
38
20
36
34
58
56
50
64
60
22a
22
22b
24b
14
62
54
28
22c
26
24a
30

Fig. 5

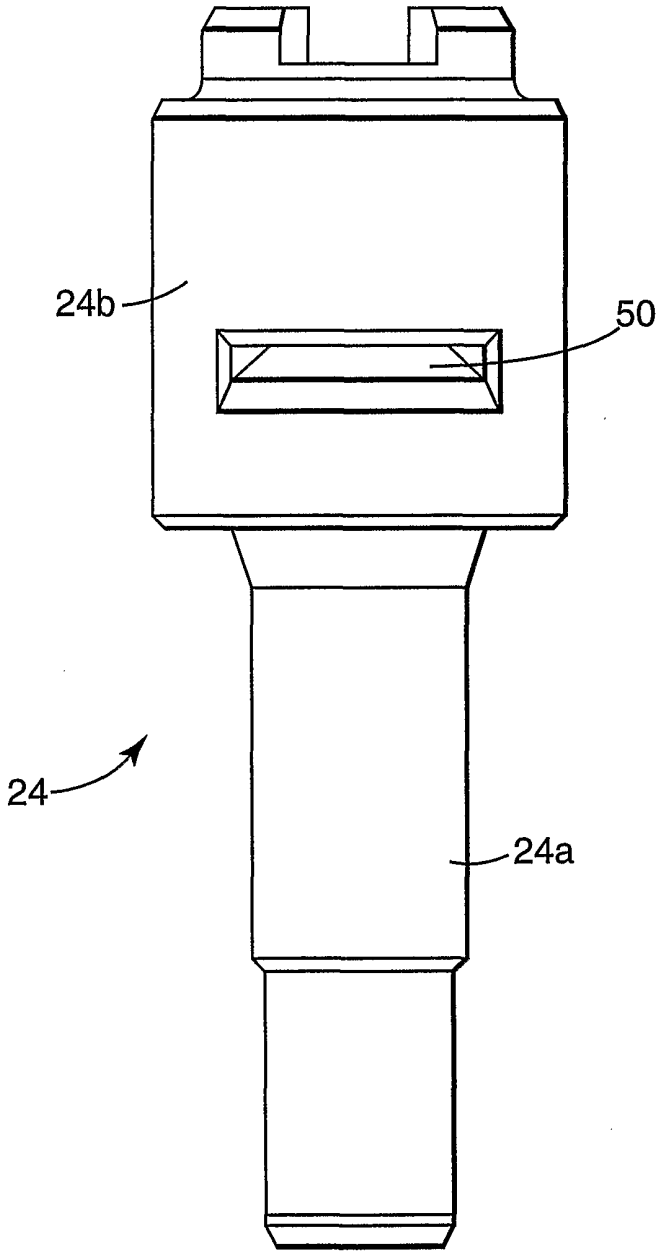

Fig. 6a

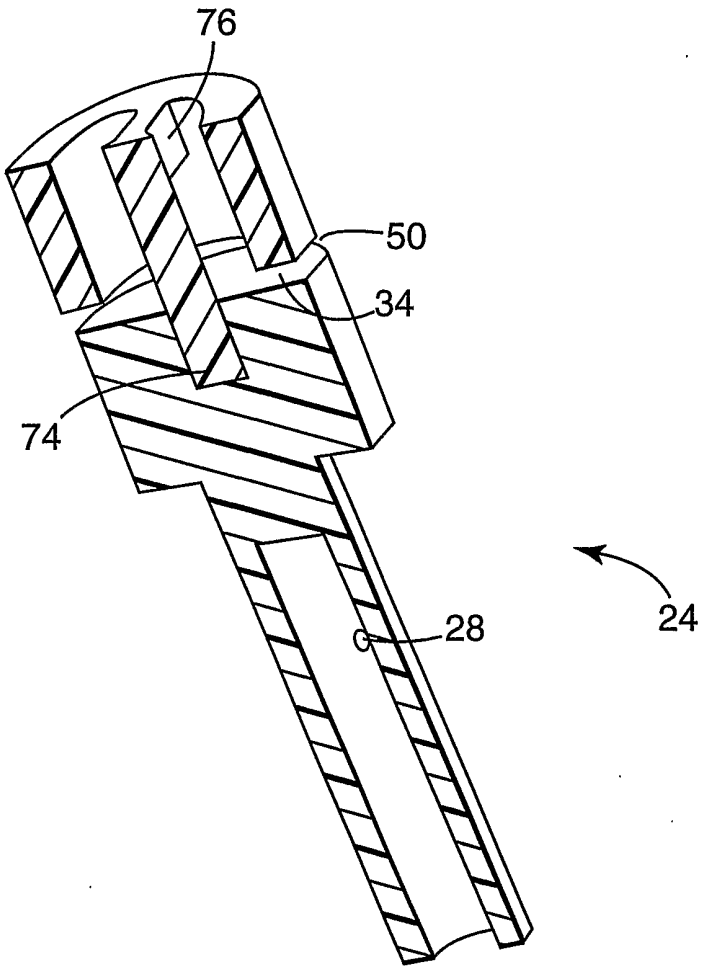

Fig. 6b

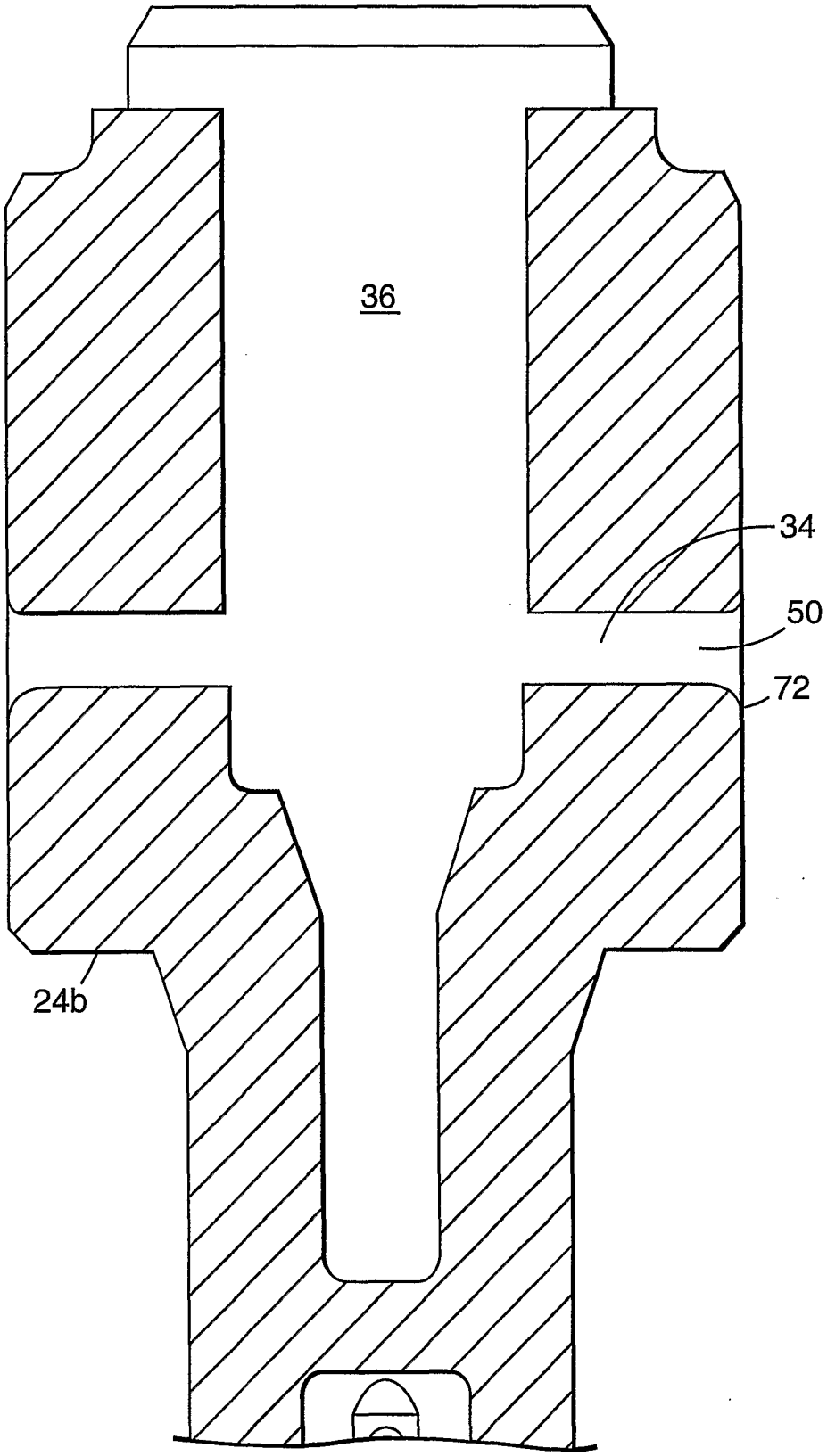

Fig. 7

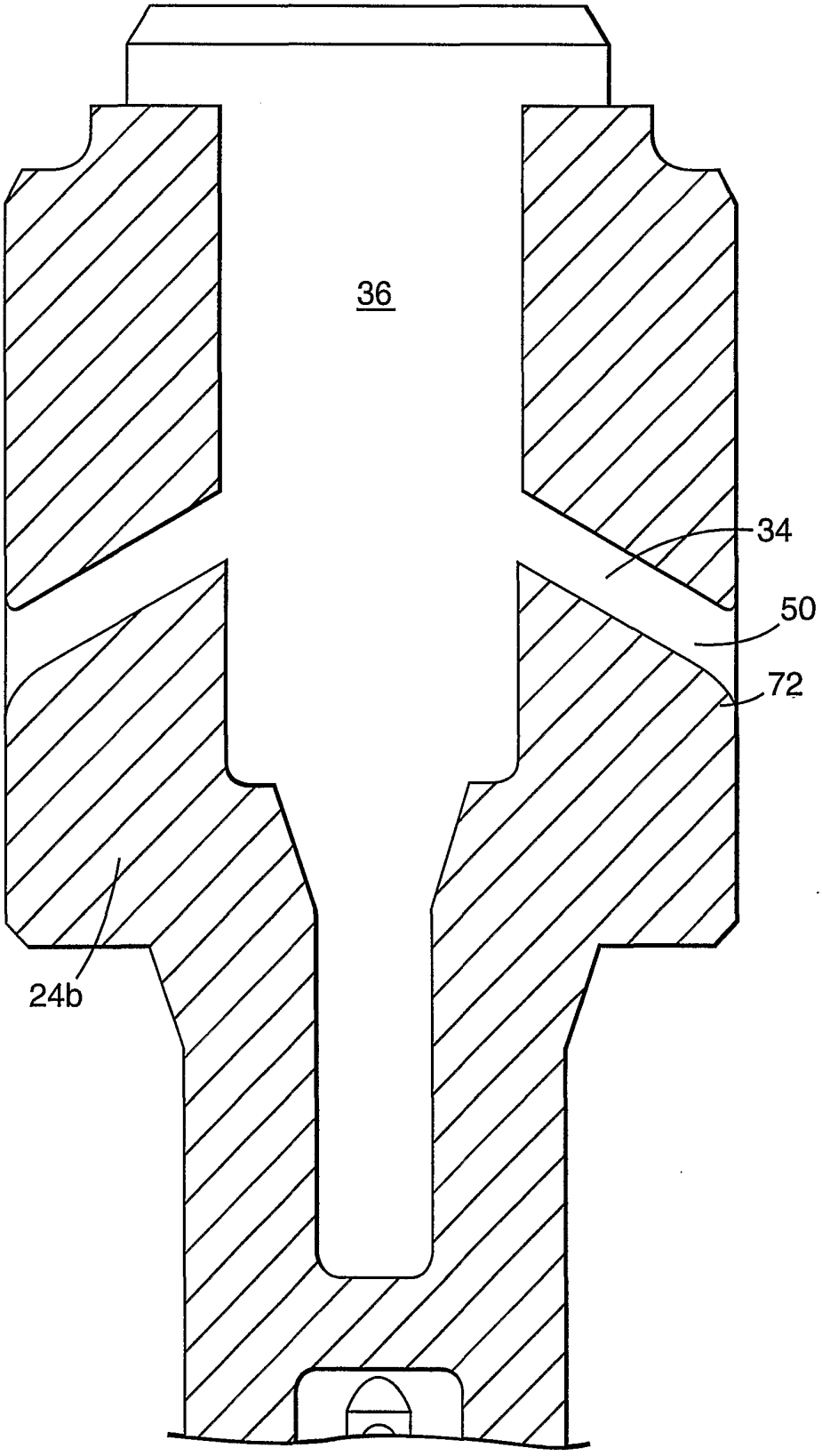

Fig. 8

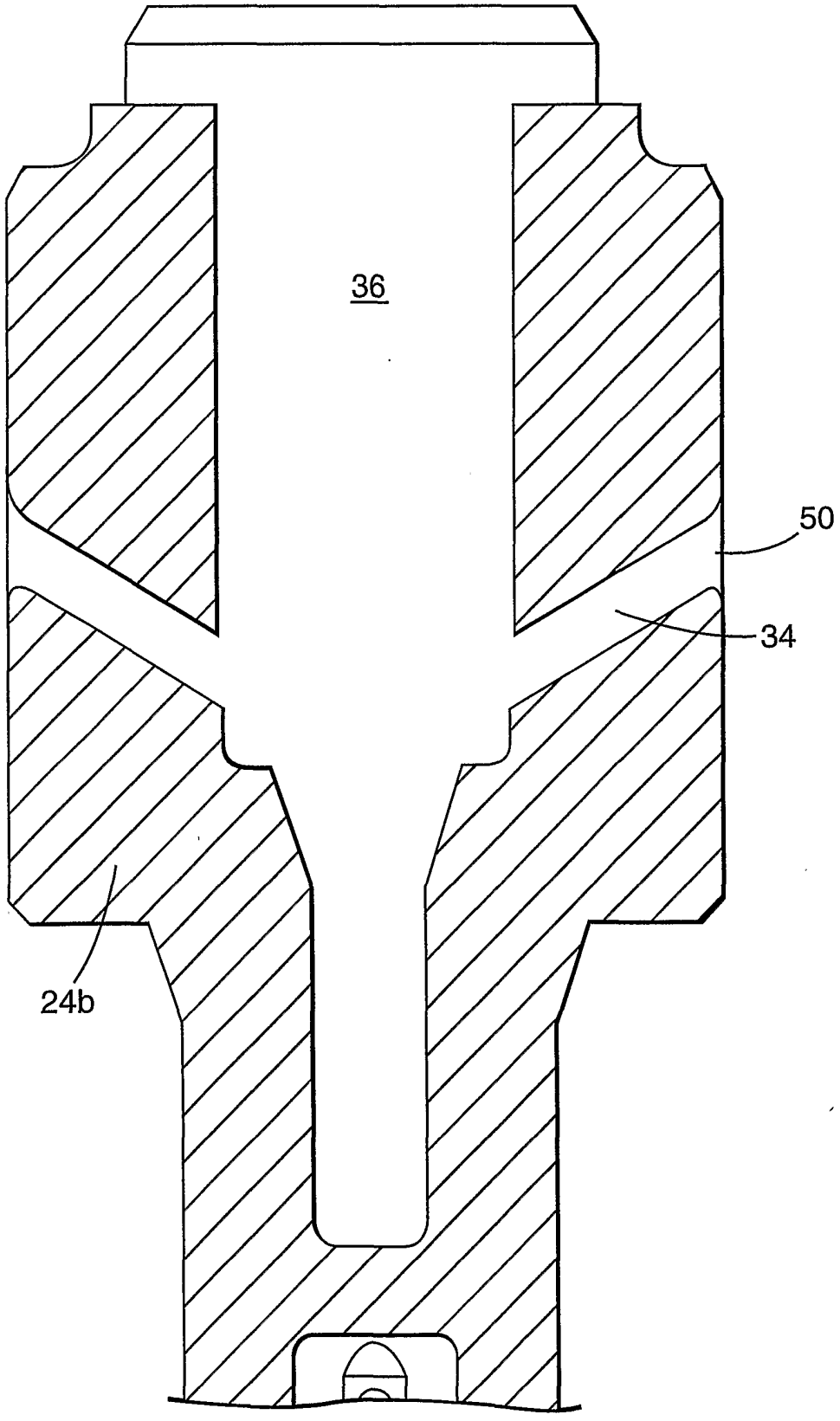

Fig. 9

INTERNATIONAL SEARCH REPORT

International Application No
PCT/US 02/08323

A. CLASSIFICATION OF SUBJECT MATTER
IPC 7 B65D83/54 B65D83/34

According to International Patent Classification (IPC) or to both national classification and IPC

B. FIELDS SEARCHED

Minimum documentation searched (classification system followed by classification symbols)
IPC 7 B65D

Documentation searched other than minimum documentation to the extent that such documents are included in the fields searched

Electronic data base consulted during the international search (name of data base and, where practical, search terms used)

EPO-Internal, WPI Data, PAJ

C. DOCUMENTS CONSIDERED TO BE RELEVANT

Category °	Citation of document, with indication, where appropriate, of the relevant passages	Relevant to claim No.
X	GB 798 683 A (LAWRENCE THOMAS WARD) 23 July 1958 (1958-07-23)	10,13,25
A	page 2, line 95 -page 4, line 28; figures 1-5	1,12,14
A	FR 1 461 685 A (IDEES) 25 February 1966 (1966-02-25)	
A	US 3 169 677 A (RICHARD FOCHT JOHN) 16 February 1965 (1965-02-16)	

☐ Further documents are listed in the continuation of box C.

☒ Patent family members are listed in annex.

° Special categories of cited documents :

"A" document defining the general state of the art which is not considered to be of particular relevance

"E" earlier document but published on or after the international filing date

"L" document which may throw doubts on priority claim(s) or which is cited to establish the publication date of another citation or other special reason (as specified)

"O" document referring to an oral disclosure, use, exhibition or other means

"P" document published prior to the international filing date but later than the priority date claimed

"T" later document published after the international filing date or priority date and not in conflict with the application but cited to understand the principle or theory underlying the invention

"X" document of particular relevance; the claimed invention cannot be considered novel or cannot be considered to involve an inventive step when the document is taken alone

"Y" document of particular relevance; the claimed invention cannot be considered to involve an inventive step when the document is combined with one or more other such documents, such combination being obvious to a person skilled in the art.

"&" document member of the same patent family

Date of the actual completion of the international search	Date of mailing of the international search report
2 July 2002	22/07/2002

Name and mailing address of the ISA	Authorized officer
European Patent Office, P.B. 5818 Patentlaan 2 NL – 2280 HV Rijswijk Tel. (+31-70) 340-2040, Tx. 31 651 epo nl, Fax: (+31-70) 340-3016	SERRANO GALARRAGA, J

INTERNATIONAL SEARCH REPORT

Information on patent family members

International Application No
PCT/US 02/08323

Patent document cited in search report	Publication date	Patent family member(s)	Publication date
GB 798683 A	23-07-1958	CH 330767 A	30-06-1958
		DE 1027945 B	10-04-1958
FR 1461685 A	25-02-1966	NONE	
US 3169677 A	16-02-1965	FR 1316626 A	01-02-1963
		BE 625772 A	
		GB 968573 A	02-09-1964
		NL 286976 A	