(No Model.)

E. HALLSTROM.

TENSION DEVICE FOR TWINE BINDERS.

No. 590,190. Patented Sept. 14, 1897.

Fig. 1.

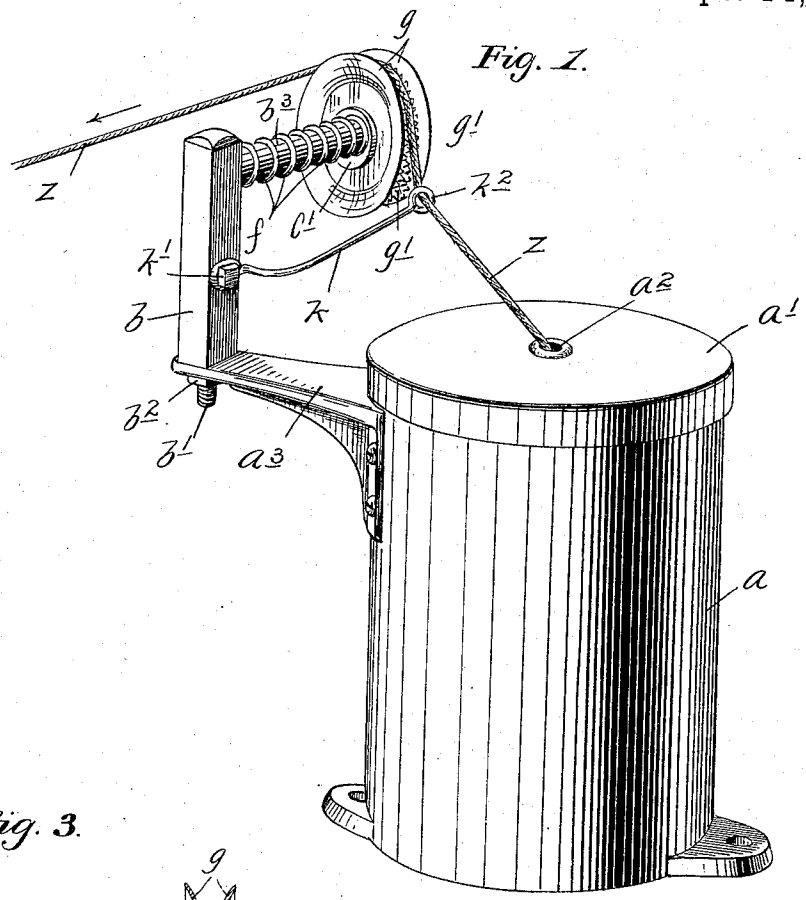

Fig. 3.

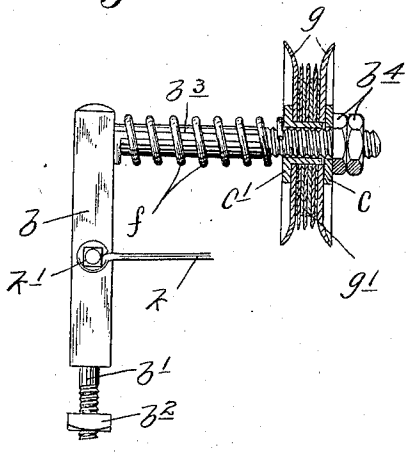

Fig. 2.

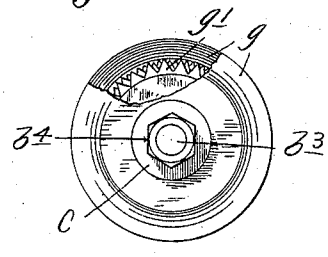

Witnesses
C. F. Kilgore
D. D. Merchant.

Inventor
Erick Hallstrom.
By his Attorney.
Jas. F. Williamson

THE NORRIS PETERS CO., PHOTO-LITHO., WASHINGTON, D. C.

UNITED STATES PATENT OFFICE.

ERICK HALLSTROM, OF MONTEVIDEO, MINNESOTA.

TENSION DEVICE FOR TWINE-BINDERS.

SPECIFICATION forming part of Letters Patent No. 590,190, dated September 14, 1897.

Application filed December 11, 1896. Serial No. 615,356. (No model.)

To all whom it may concern:

Be it known that I, ERICK HALLSTROM, a citizen of the United States, residing at Montevideo, in the county of Chippewa and State of Minnesota, have invented certain new and useful Improvements in Tension Devices for Twine-Binders; and I do hereby declare the following to be a full, clear, and exact description of the invention, such as will enable others skilled in the art to which it appertains to make and use the same.

My invention has for its object to provide an improved tension device especially adapted for use on harvesters employing twine-binders.

As is well-known, the function of a tension device, when used in connection with this class of binding mechanism, is to hold the twine at some point between the twine-box or twine-holder and the needle under sufficient tension to insure a tightly-bound bundle. This tension of course is not relied upon to compress the bundle, but must, nevertheless, be strong enough to draw the twine tightly against the bundle, which at the time of making the loop or band is compressed between the packers and the packer trip or head. The tension thus necessarily put upon the twine often approaches very closely to the breaking strength of the twine at its weakest points. It thus becomes obvious that it is of the greatest importance to provide a tension device which, when set to give the proper tension, will remain practically constant in its action, in one case to prevent the breaking of the twine by an overtension thereon and in the other case to prevent the forming of too-loosely-bound bundles by slipping or too light tension on the twine. This I accomplish in my present invention by a device the preferred form of which is illustrated in the accompanying drawings.

In the said drawings, like letters referring to like parts throughout the several views, Figure 1 is a perspective view showing the preferred form of my tension device applied in working position, the same being shown as supported from the twine-box. Fig. 2 is a side elevation of the tension-sheave removed from its support and some parts of the same being broken away; and Fig. 3 is a view, partly in side elevation and partly in section, showing the tension device removed from its support.

Referring in detail to the parts shown, a indicates an ordinary twine-box provided with a cover a', opening through the center of which is an eye a^2, through which the twine is drawn from the box.

a^3 indicates a bracket which, as shown, is secured to the body of the twine-box a.

b indicates a vertical post the lower end of which is rigidly secured to the outer end of the bracket a^3 by means of a threaded stud projection b' and a nut b^2. Projecting laterally from the upper end of the post b is a spindle or stud b^3, the outer end of which is screw-threaded and provided with a pair of jam-nuts b^4.

c indicates a washer loosely mounted on a stud b^3, just inward of the nuts b^4, and c' indicates a flanged thimble, also loose on the stud b^3, inward of said washer c, with its flanged portion turned inward toward the post b.

f indicates a coiled spring located on the stud b^3 and compressed between the post b and the flange of the thimble c' by the jam-nuts b^4.

Loosely mounted on the thimble c', but frictionally pressed between the washer c and the flange of said thimble c', is a tension-sheave formed by a pair of flaring guide or side disks g, spaced apart from each other and having rigidly secured therewith and therebetween a series of thin serrated disks g', which in diameter are less than the said disks g, and the teeth of which are set in zigzag order. The serrated or sharply-roughened surface formed by the disks g' forms a bearing-surface over which the twine z is to be passed on its way from the twine-box to the needle, and which, while it permits the cord to be drawn freely, will not permit the same to slide or slip with respect to the sheave. In other words, the twine cannot be drawn without causing the sheave to revolve. The serrated disks g' form a sharply-roughened surface over which the twine will pass without possibility of slipping, and at the same time the twine will not be crowded or wedged between the side disks g.

As shown, the twine is guided and is held so that it will not jump from the groove in

the periphery of the sheave by means of a guide-arm k, one end of which is shown as secured to the post b by means of a machine-screw k', and the free end of which is provided with a guide-eye k^2, through which the twine is passed.

As is evident, the tension under which the tension-sheave g g' may be caused to rotate may be variably set so as to suit the conditions of different grades or sizes of twine simply by screwing up or loosening the jam-nuts b^4, so as to vary the tension of the spring f on the said sheave.

From the foregoing it is thought to be clear that while I have illustrated my tension device as supported from the twine-box the same might be located at any point between the twine-box and the needle. In fact, with many binders I prefer to support the tension device from the binder-frame and in close proximity with the needle.

It will also be understood from the statements above made that various alterations in the specific details of construction above set forth may be made without departing from the spirit of my invention.

What I claim, and desire to secure by Letters Patent of the United States, is as follows:

A tension device for a twine-binder or similar mechanism, involving a rotary sheave made up of side pieces or guide-disks, pressed together and a series of serrated central disks set in zigzag order and secured between said side pieces, substantially as described.

In testimony whereof I affix my signature in presence of two witnesses.

ERICK HALLSTROM.

Witnesses:
LILLIAN C. ELMORE,
F. D. MERCHANT.