J. W. SHEPERDSON.

METHOD OF AND APPARATUS FOR ROLLING METAL.

APPLICATION FILED JULY 10, 1918.

1,347,917. **Patented July 27, 1920.**

2 SHEETS—SHEET 1.

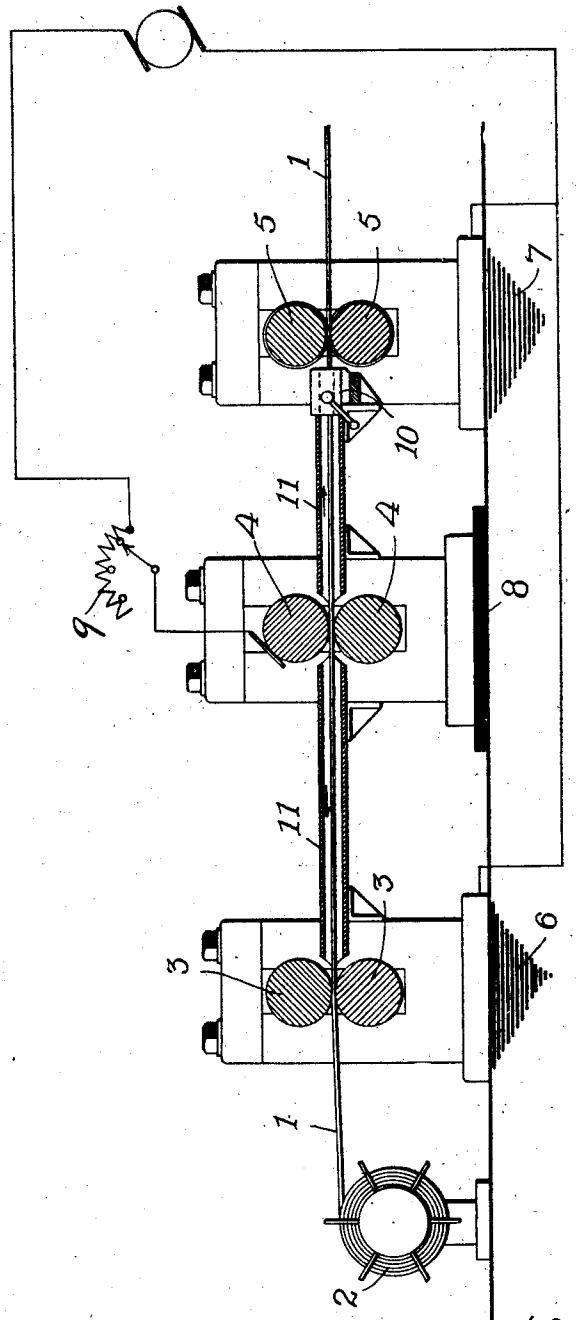

Fig. 1.

Inventor
John W. Sheperdson
By Attorneys
Fowler & Kennedy

J. W. SHEPERDSON.

METHOD OF AND APPARATUS FOR ROLLING METAL.

APPLICATION FILED JULY 10, 1918.

1,347,917.

Patented July 27, 1920.

2 SHEETS—SHEET 2.

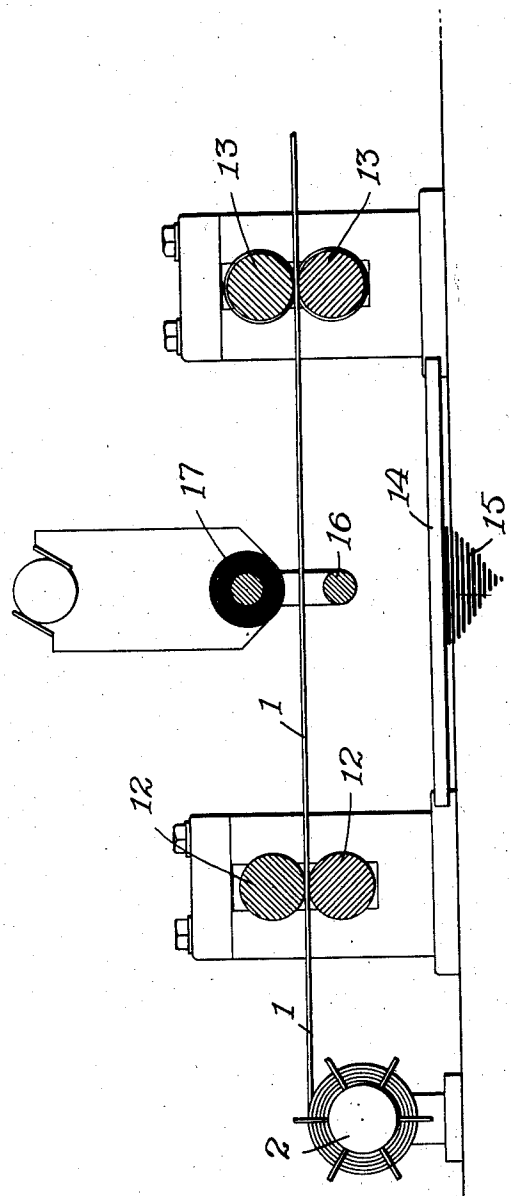

Fig. 2.

Inventor
John W. Sheperdson
By Attorneys
Fowler & Kennedy

UNITED STATES PATENT OFFICE.

JOHN W. SHEPERDSON, OF WORCESTER, MASSACHUSETTS, ASSIGNOR TO MORGAN CONSTRUCTION COMPANY, OF WORCESTER, MASSACHUSETTS, A CORPORATION OF MASSACHUSETTS.

METHOD OF AND APPARATUS FOR ROLLING METAL.

1,347,917. Specification of Letters Patent. Patented July 27, 1920.

Application filed July 10, 1918. Serial No. 244,181.

To all whom it may concern:

Be it known that I, JOHN W. SHEPERDSON, a subject of the Kingdom of Great Britain, residing at Worcester, in the county of Worcester and Commonwealth of Massachusetts, have invented a new and useful Improvement in Methods of and Apparatus for Rolling Metal, of which the following, together with the accompanying drawings, is a specification.

The present invention relates to the rolling of metal rods or bars, or other similar semi-finished material, into various shapes, by passing the material, while hot, continuously through one or more stands of rolls having suitably shaped cöoperating grooves. It is the purpose of the present invention to adapt this usual hot rolling operation to the treatment of semi-finished material, usually of relatively small cross section, as for instance where it may be desired to continuously reduce a rod or bar to a flat band, or the like. The present invention contemplates the provision of rolling mill apparatus for the above purpose in such a form as to eliminate the necessity for a furnace to heat the material before its passage through the rolls; it will be seen that the apparatus is capable of being operated intermittently, whenever desired, and can be started up at will without previous preparation of the material to be treated.

My invention is set forth in detail hereinafter, reference being had to the accompanying drawings, in which Figure 1 represents diagrammatically one arrangement of apparatus for carrying the invention into practice; and Fig. 2 represents diagrammatically a modified form of apparatus; it will be understood, however, that my invention is in no sense confined to the use of the apparatus herein described, but is susceptible of such variations and deviations therefrom as come within the scope of the appended claims.

Great difficulty has been experienced heretofore in providing for the economical reduction by hot rolling, of material semi-finished, such as rods and bars, especially where, as is frequently the case, the requirements of working are such that the rolling operation is practised only periodically, with frequent shut-downs of the apparatus. Considerable heat must be supplied to the material, even for a small rolling mill installation of this class, and the use of an ordinary heating furnace for this purpose is attended with great waste; where the rolling is to be discontinued after a short period and then recommenced, the furnace method of heating is practically out of the question, owing to delays in starting up and shutting down, in addition to the waste.

According to the present invention, these difficulties attendant upon the operation of small rolling mill installations are overcome by the use of electrical means for heating the material only while it is in motion, and on its way to the reducing rolls. As shown in Fig. 1 of the drawings the material, such as a round rod or wire 1 is continuously withdrawn from a reel or other suitable supply device 2, which is suitably disposed on the mill floor. In advance of the reel 2 is disposed an ordinary stand of pinch rolls 3, 3, which are rotated from any suitable source of power, to feed the material forward, without reducing or changing its shape, to a second stand of pinch rolls 4, 4. These latter rolls also act merely as feed rolls, to deliver the material continuously to a stand of reducing rolls 5, 5, in which are formed coöperating grooves of the required shape to constitute a reducing pass, calculated to impart a different cross section to the material.

The housings of the rolls 3, 3, and 5, 5, are grounded or otherwise maintained at zero electrical potential, as indicated at 6 and 7 respectively in the drawings. The housing of rolls 4, 4 on the other hand is separated from the mill floor by a layer of suitable insulating material 8. This housing, together with the rolls 4, 4, which it carries, is maintained at an electrical potential, by connection to a suitable source of electric current supply having means for adjusting its voltage, as shown at 9 in the drawings. It will thus be seen that only the middle roll housing is at an electrical potential, the end roll housings and the reel 2 being at zero potential, so that that part of the material 1 which is exposed at the two ends of the apparatus in advance of the rolls 3 and beyond the rolls 5, is not charged, and can be handled with entire safety.

In the arrangement of apparatus above described the flow of current from the housing

of rolls 4, 4, is in opposite directions through the material 1 on opposite sides of said rolls and thence to ground through the housing of rolls 3, 3, and through the housing of rolls 5, 5. As a consequence the material 1 is thoroughly and uniformly heated in its passage to the reducing rolls 5, 5, an initial heating takes place between the rolls 3, 3, and 4, 4, and a final heating takes place between the rolls 4, 4, and 5, 5. Preferably the same amount of current is caused to flow through the material in each direction from the rolls 4, 4, and owing to the increased resistance of the portion of material which is already heated, before it reaches the rolls 4, 4, it will be necessary, in order to obtain this equalization of current, to make the distance between the second and third stands much shorter than the distance between the first and second stands.

In starting the operation with material taken cold from the reel 2, the end of the stock is fed by hand through the rolls 3, 3, and 4, 4, and is clamped or secured in electrical connection with the stand of rolls 5, 5. If desired, an adjustable guide 10 may be used for thus clamping the material in place, prior to starting the rolling operation. With the material 1 thus stationary, the current from source 9 is switched on and the voltage thereof gradually brought up until the material has attained a proper rolling temperature. Thereupon the rolling may be proceeded with by feeding the advanced end of the stock to the pass formed by the grooves of rolls 5, 5. When the material on reel 2 is exhausted, another reel may be moved into place, and the ends of the two lengths of stock may be welded together, so that the rolling can proceed without interruption. It will be seen that no inconvenience or danger is attendant upon the handling of either end of the material, notwithstanding that a portion of the same in charged; these ends are always at zero potential, or the same potential as the floor on which the operator stands.

If desired, the loss of heat from the material by radiation may be minimized by the provision of a suitable conduit or tube of any suitable material having a low heat conductivity, such as shown at 11, 11, in the drawings. Other and further modifications and refinements will suggest themselves to those skilled in the art, it being clear that the invention is susceptible of wide variation within the scope of the appended claims, from the form and arrangement of apparatus herein shown. The essence of the invention resides in the above described adaptation of the ordinary hot rolling and reducing operations to work of a special character which requires small installations, and which can not be carried on economically under the ordinary arrangements for heating. By the present invention, not only is an economical source of heat provided, but the same is in such a form as to permit operation of the apparatus for as short a period as desired, without undue loss.

In the arrangement of apparatus shown in Fig. 2, the material 1 is fed by suitable pinch rolls 12, 12, to a stand of reducing rolls 13, 13, it being understood that in common with the arrangement of apparatus shown in Fig. 1, any desired number of reducing stands may be provided to effect the required reduction of the material. In the present instance the housings of the stands of rolls 12 and 13 are preferably electrically connected by a bus bar or conductor 14, which is grounded as shown at 15. Intermediate the stands of rolls 12 and 13 is disposed a high tension transformer 16 which may be of any well known type, the same providing a primary winding 17 comprising a multiplicity of turns of wire through which passes an electric current of high voltage and low amperage from a source of alternating current supply. The secondary winding of the transformer 16 is constituted as shown by an electrical circuit which includes that portion of the material 1 which is between the rolls 12 and 13. The remainder of said secondary circuit is constituted by the two roll housings and the connecting conductor 14, so that there is set up by induction in this secondary circuit an alternating current of low voltage and high amperage.

As a result, the material 1 is subjected to heating in its passage between the stands of rolls 12 and 13, it being clear that every portion of the material becomes progressively hotter and hotter as it approaches the reducing rolls 13. Owing to the grounding of the secondary circuit, as above described, no inconvenience or danger is attendant upon the handling of either end of the material 1, beyond the rolls 12 and 13.

The foregoing description of two different arrangements of apparatus for carrying my invention into practice are to be regarded as illustrative merely of the various ways in which the electrical heating of material which is undergoing reduction by rolling may be performed. It will be clear that my invention is susceptible of numerous other variations than those herein shown, such as fall within the terms of the appended claims.

I claim,

1. The herein described method of rolling metal, which consists in forwarding the metal continuously to a reducing pass, and passing an electric current therethrough in opposite directions while in transit.

2. The herein described method of rolling metal, which consists in forwarding the metal by a plurality of stands of feed rolls to a reducing pass, and passing an electric

current therethrough in opposite directions from one of said stands of feed rolls.

3. The herein described method of rolling metal, which consists in passing the metal through a plurality of stands of rolls, maintaining an electrical potential at one of said stands, and grounding other of said stands.

4. The herein described method of rolling metal, which consists in passing the same through a plurality of stands of grounded rolls, and through an intermediate stand of insulated rolls, and maintaining an electrical potential upon said intermediate insulated rolls.

5. In apparatus of the class described, the combination with a plurality of stands of rolls for feeding and reducing metal, of means for maintaining a difference in electrical potential between an intermediate stand of rolls and the stands on either side thereof, whereby to cause a flow of current in opposite directions through the metal passing between said stands.

6. In apparatus of the class described, the combination with a plurality of stands of rolls for feeding and reducing metal, certain of said stands being grounded, of means for maintaining an electrical potential on another of said stands, whereby to cause a flow of current through the metal between said stand and the grounded stands.

7. In apparatus of the class described, the combination with a plurality of stands of rolls for feeding and reducing metal, of means for maintaining said stands at a common zero electrical potential, and means for procuring the flow of electrical current through a circuit which includes said stands, and the metal which is being operated upon by said rolls.

Dated this 2nd day of July 1918.

JOHN W. SHEPERDSON.

Witnesses:
KENNETH B. LEWIS,
FLORENCE C. COOK.