July 25, 1950 M. M. SCHIMMEL 2,516,426

EVENING DRESS CONSTRUCTION

Filed Jan. 11, 1949

Fig. 1.

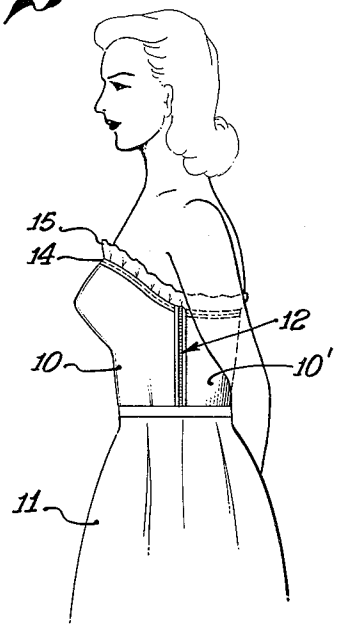

Fig. 4.

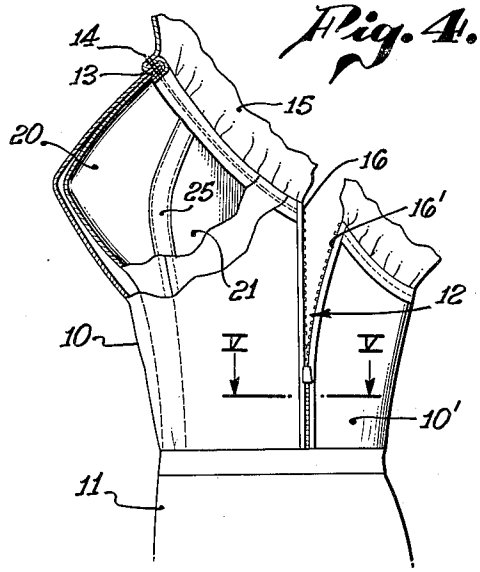

Fig. 2.

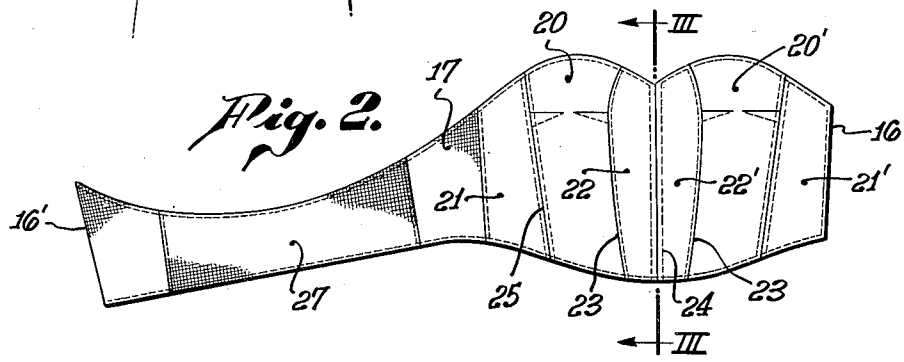

Fig. 3.

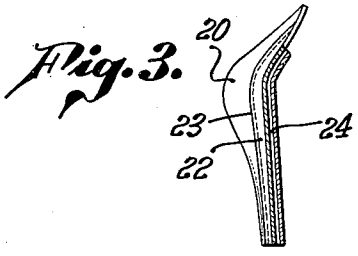

Fig. 5.

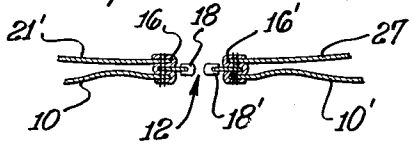

MADALYN MILLER SCHIMMEL
INVENTOR.

BY

ATTORNEY.

Patented July 25, 1950 2,516,426

UNITED STATES PATENT OFFICE

2,516,426

EVENING DRESS CONSTRUCTION

Madalyn Miller Schimmel, Los Angeles, Calif.

Application January 11, 1949, Serial No. 70,331

2 Claims. (Cl. 2—74)

1

This invention relates to the construction of feminine outer garments which can be provocatively perched upon the bosom, without shoulder straps. The invention is particularly directed to the construction of a strapless evening dress including bodice and skirt portions provided with integral means for holding the garment in position upon the body and provided with means whereby the entire garment may be adjustably positioned upon the body or removed therefrom in a rapid and ready manner.

Strapless evening gowns have been made and used heretofore but the wearer did not have a sense of security and as a result was subject to uncertainty and repeatedly adjusted her dress, since the dress had a tendency to slip down and expose those portions of the anatomy which convention deems it desirable to maintain covered in public. In such prior constructions the wearer used normal undergarments with the possible exception that specially designed brassières with integral springs, bones and other reinforcements were generally worn beneath the dress. In all instances, however, whether a brassière was worn beneath the gown or not, the upper marginal edges of the gown were provided with drawstrings, elastic, or other constricting elements, and in most cases the gown itself was provided with bones and other reinforcing designed to support the bodice of the gown from the waist or hip region of the wearer.

These prior constructions were not only uncomfortable to wear but failed to give the desired sense of security. Moreover, as previously indicated, the evening gown itself had to be specially constructed so as to include the necessary reinforcing and supporting bones, springs, elastic elements, etc.

The present invention permits the gown to be made in a normal manner and does not require the use of a separate brassière or other bust-covering and supporting garment. As a result, the evening dress may be quickly placed upon or taken off the body. The lines and contours of the dress need not be impaired, as is the case when bones, springs, etc., have to be attached to or carried by the garment.

Generally stated, the invention, although applicable to various exterior feminine garments, is particularly applicable to strapless evening dresses or gowns including bodice and skirt portions. Such gown is provided with integral means for holding the garment in position upon the body, such means being permanently attached only to the upper margin of the bodice. The rest of the bodice as well as the skirt is not

2

attached to the anchoring or holding means and therefore the figure and pattern of the material from which the gown is made, as well as the artistic ability of the gown's designer, is not impaired by the inclusion of mechanical features such as bones, which inevitably make their presence known by lines of stitching upon the outer surface of the garment.

Means are also provided whereby the entire garment may be readily closed, in order to properly fasten it in position, by an inconspicuous, vertically extending mechanical closure of the zipper type, hooks and eyes, or the like, this closure simultaneously releasing both the gown and the holding or positioning means. Such vertically extending closure may be provided either at the back of the garment or preferably at an underarm position.

It is an object of the present invention, therefore, to disclose and provide a construction of feminine outer garments whereby the bust is adequately and securely covered and supported without the use of separate brassières or shoulder straps.

A further object of the invention is to disclose and provide an evening gown construction which is free from shoulder straps and which is virtually unattached to any underlying element except at the front portion of the bodice.

These and other objects and advantages of the present invention will become apparent to those skilled in the art from the following description of an exemplary form of the invention, illustrated in the appended drawings, wherein:

Fig. 1 is a side view of an evening gown made in accordance with the present invention, in the position which it assumes upon the feminine form.

Fig. 2 is a view of the holding means alone, in stretched out or extended form.

Fig. 3 is a vertical section along the plane III—III of Fig. 2.

Fig. 4 is an enlarged side view of the gown, a part thereof being broken away and in section, illustrating the cooperative relationship of the parts.

Fig. 5 is an enlarged horizontal section taken along the plane V—V of Fig. 4.

As shown in Fig. 1, the gown includes a bodice, generally indicated at 10, and a skirt 11, it being understood that the bodice and skirt may be made in any suitable manner and may merge one into the other. It will be noted that the garment does not include shoulder straps and that the back of the wearer is well exposed.

In order to permit full expression of the dress

designer's skill, the gown or dress is free from buttons or other closure means in the front or in the back portions of the gown and preferably a vertically extending placket or closure, generally indicated at 12, is positioned at an underarm portion of the dress. The invention, however, is not limited to this particular location of the placket since, in some instances, it may be positioned in the mid portion of the back.

The placket 12 may be provided with a zipper-type of closure and not only brings together the adjoining edges of the bodice of the gown but also brings together adjoining edge portions of a brassière which is an integral part of the gown. By referring to Figs. 4 and 5 the construction will be readily understood. As shown in these figures, the bodice 10 is connected at its upper front marginal edge to the upper front marginal edges 13 of a brassière or bust-supporting device by a line of stitching indicated at 14. Such line of stitching may simultaneously hold in position a ruffle, lace, or other decorative trim 15. A vertically extending margin 16 of the brassière (normally assuming an underarm position) and a similar margin 17 on the other side of the garment denote the limits of the upper marginal edge 13 along which the brassière is firmly and permanently attached to the dress as by the line of stitching 14. The placket 12 is generally materially longer than margins 16 and 16' of the brassière.

Those skilled in the art will understand that the bodice 10 is also provided with a vertical marginal edge adapted to underlie the marginal edge 16 of the brassière and to these aligned edges one portion 18 of a zipper or other closure element is attached, as for example in the manner illustrated in Fig. 5. The opposing edge of the bodice portion indicated at 10' as well as the opposing marginal edge of the brassière indicated at 16' are similarly connected together with the cooperating or complementary portion of the closure 18'. A single actuation of the closure will therefore not only cause the dress to be fastened upon the body of the wearer, but simultaneously the underlying brassière, which is an integral part of the dress, will be fastened similarly upon the body.

The particular brassière illustrated in the drawings comprises a pair of breast cups, indicated at 20 and 20' suitably joined to the underarm portions 21 and 21'. The breast-receiving portions 20 and 20' may be provided with suitable tucks to impart the desired configuration thereto. These breast-receiving or cup-shaped portions 20 and 20' may be connected to centrally disposed, vertically extending members 22 and 22' joined along lines of stitching indicated at 23. A vertically extending pocket may be formed between the members 22—22' so as to receive a reenforcing strip of enameled metal, resilient plastic, or the like. The pocket is indicated at 24. The upper end of the reenforcing strip or bone is bent inwardly toward the body as best illustrated in Fig. 3, this arrangement assuring close contact of the brassière to the body between the bosoms.

It may be noted that the brassière illustrated is wider, i. e., has a greater height than normal brassières, thereby permitting the lower portion of the bone or reenforcing contained in the pocket 24 to rest against the upper part of the abdomen, thereby insuring a proper flexure of such reenforcing, such flexure being transmitted to the upper end of the reenforcing and facilitating contact of the brassière with the body adjacent the upper marginal edge 13 and between the bosoms.

Between the breast-cup members 20 and the underarm portions 21 a pocket 25 is formed also containing a strip of resilient material such as metal, plastic, bone or the like. The upper ends of such strips are also inwardly curved so as to conform to the contours of the breast and facilitate coverage thereof. It will be noted, however, that the pockets 25 are outwardly inclined, the lower ends of such pockets being closer to the central pocket 24 than the upper ends of such pockets.

The underarm marginal edge portion 17 may be connected to a suitable strip of elastic, webbing, power net, or other resilient and elastic material adapted to extend across the lower portion of the back of the wearer. Such elastic strip is indicated at 27 and may be made of one, two, or three pieces, terminating in the vertical marginal edge 16' hereinbefore referred to for cooperative engagement with the corresponding marginal edge of the gown at the placket 12.

It will be evident from the construction described hereinabove that inasmuch as the gown is actually attached to the upper marginal front edge of the brassière, the entire garment is supported upon the body of the wearer by the brassière. The construction of the brassière may be somewhat modified from that illustrated, although it has been found that the illustrated structure not only adequately supports the breasts but maintains its position upon the body and thereby supports the gown adequately and firmly. By providing a single closure, whereby both the brassière and the gown may be fastened upon the body of the wearer, the owner of the gown may quickly and easily dress and undress herself, eliminating the necessity of separately fastening the gown to an underlying brassière and thereby destroying the symmetry or artistry of the gown. It will be noted that the bodice of the gown (as best shown in Fig. 4) is not attached to the brassière at any other point or points than the upper marginal edge of the gown and brassière, thereby permitting the dressmaker to employ whatever tucks, ruffles, or other decorative features she cares to use in the bodice without impairing the contours of such bodice by lines of stitching devoted to attachment of the bodice to a brassière.

Although specific reference has been made to evening gowns in order to illustrate the invention, the invention is not limited thereto and the construction may be employed in bathing suits, play clothes, and all other feminine garments.

All changes and modifications coming within the scope of the appended claims are embraced thereby.

I claim:

1. A strapless evening dress, including bodice and skirt portions provided with integral means for holding the garment in position upon the body, said means comprising a bust-covering portion overlying the bodice of the dress provided with resilient stiffening elements having inwardly curved upper end portions, one of said elements being located between the bosoms of the wearer, a placket in the bodice portion of the dress extending downwardly from the upper margin thereof in an underarm position, a resilient, elastic member attached to the bust-covering portion on the side opposite to said

placket and extending across the back of the wearer, said resilient portion terminating at said underarm placket, a single, selectively operable closure means carried by the bodice and bust-covering portion and arranged to fasten said bodice and said bust-covering portion and resilient band simultaneously, the bodice of the dress overlying the bust-covered portion and being essentially, independently movable thereover and a permanent connection between the upper front margin of said bust-covering portion and the front upper margin of the bodice.

2. A strapless, feminine outer garment, including bodice and lower portions, provided with integral, unitary means for holding the garment in position upon the body, said means comprising a bust-covering and supporting portion underlying the bodice of the outer garment and provided with resilient stiffening elements having inwardly curved, upper end portions and a resilient, stretchable, horizontally extending section, the upper margin of said means being permanently attached to the bodice, a vertically extending placket in said bodice, one vertical margin of said stretchable section terminating at the placket, said placket being of greater length than the vertical dimension of the stretchable section, and a single, releasable closure in such placket arranged to fasten said bodice and said underlying bust-covering portion and stretchable section simultaneously.

MADALYN MILLER SCHIMMEL.

REFERENCES CITED

The following references are of record in the file of this patent:

UNITED STATES PATENTS

Number	Name	Date
1,218,414	Klass	Mar. 6, 1917
2,048,531	Yerkes	July 31, 1936
2,239,056	Schiffer	Apr. 22, 1941
2,406,893	Nunn	Sept. 3, 1946
2,414,590	Folb	Jan. 21, 1947
2,457,989	Ettleson	Jan. 4, 1949