United States Patent

[11] 3,596,425

[72] Inventor Michael J. Kodaras
Scarsdale, N.Y.

[21] Appl. No. 12,969
[22] Filed Feb. 20, 1970
[45] Patented Aug. 3, 1971
[73] Assignee Keene Building Products Corporation

[54] CEILING TILE SUPPORT GRID SYSTEM
13 Claims, 8 Drawing Figs.

[52] U.S. Cl. ..... 52/665, 52/241, 52/476, 52/484, 52/495, 287/189.36 A
[51] Int. Cl. E04b 5/57
[50] Field of Search ..... 52/488, 484, 144, 145, 241, 495, 476, 475, 665, 489; 287/189.36 A

[56] References Cited
UNITED STATES PATENTS

2,942,704	6/1960	Stubbs	52/476
2,945,269	7/1960	Domen	52/498

Primary Examiner—John E. Murtagh
Attorneys—James R. Campbell and Anderson & Allegaert

ABSTRACT: A suspended ceiling structure including a grid system defining a rigid, interconnected series of transversely and longitudinally extending ceiling tile support elements, characterized by the support elements mounting adjacent ceiling tiles at disparate heights. The structure has sufficient rigidity to form the upper anchor portion for a vertical partition wall.

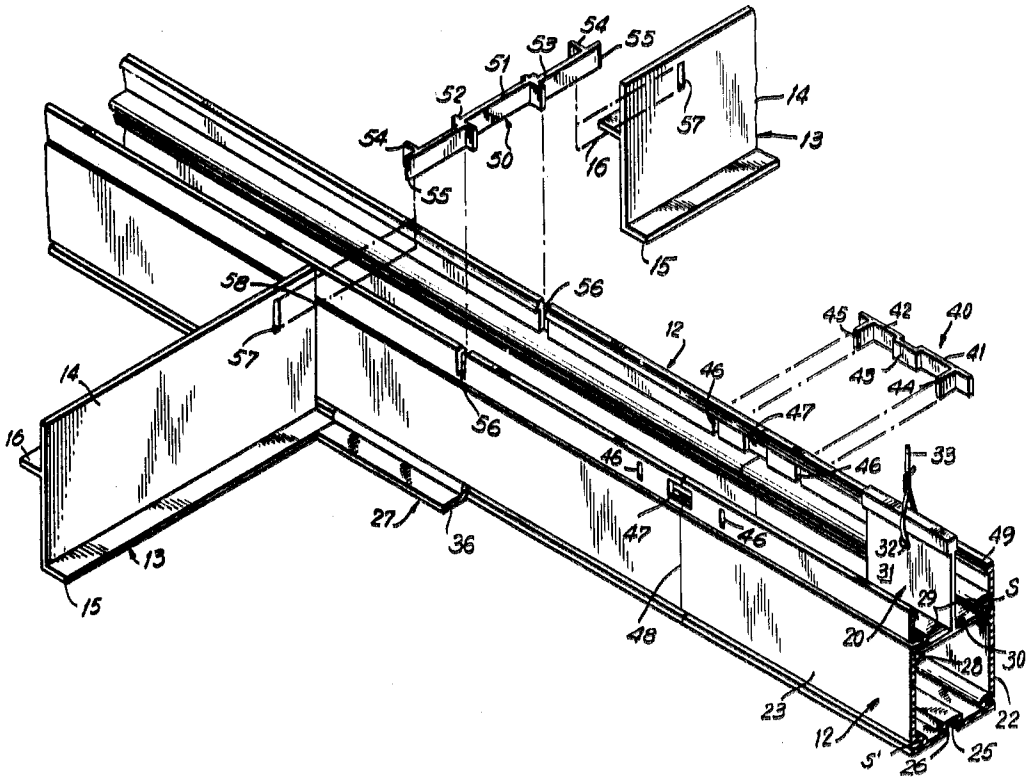

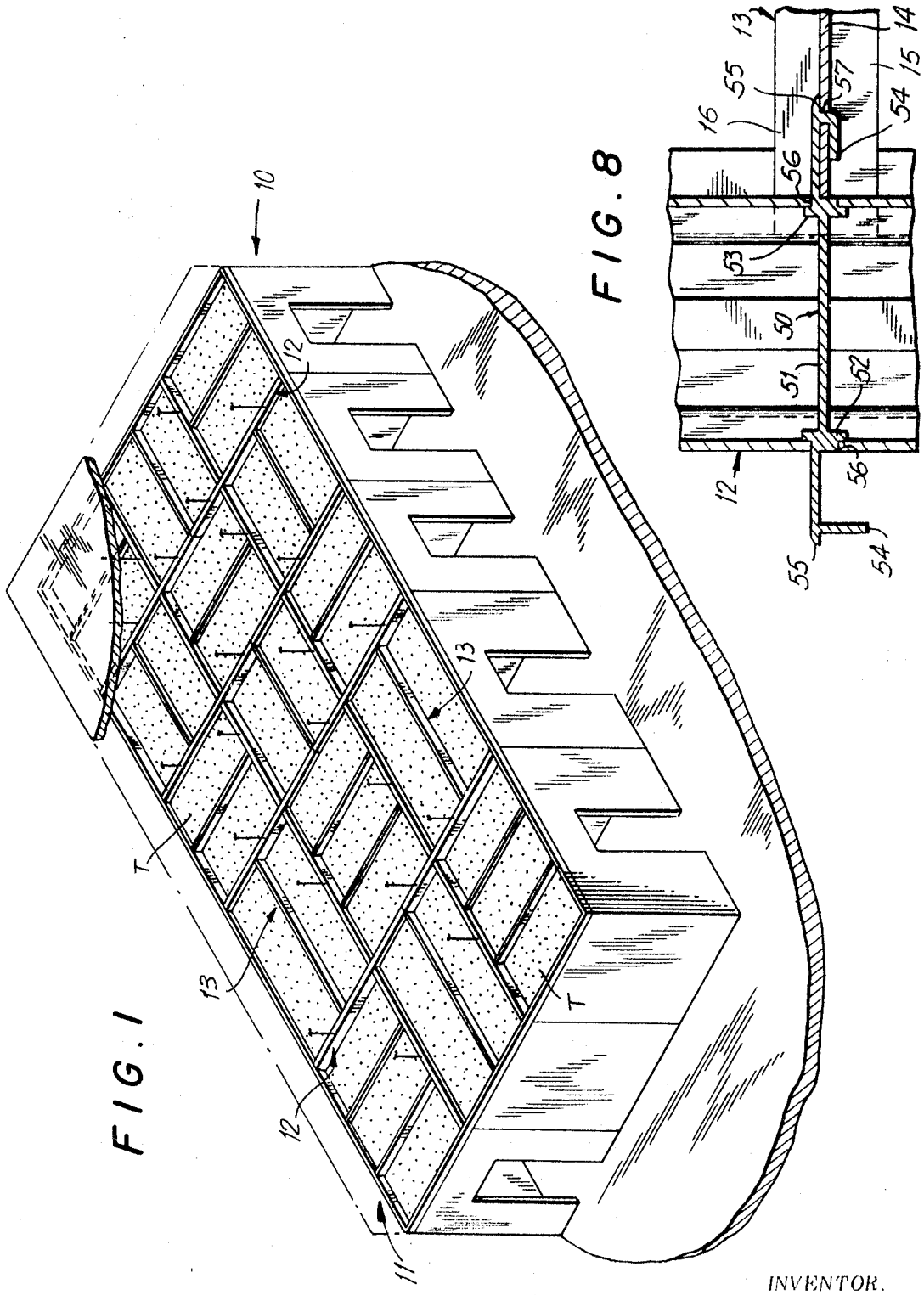

FIG. 1

FIG. 8

INVENTOR.
MICHAEL J. KODARAS

BY

ATTORNEY

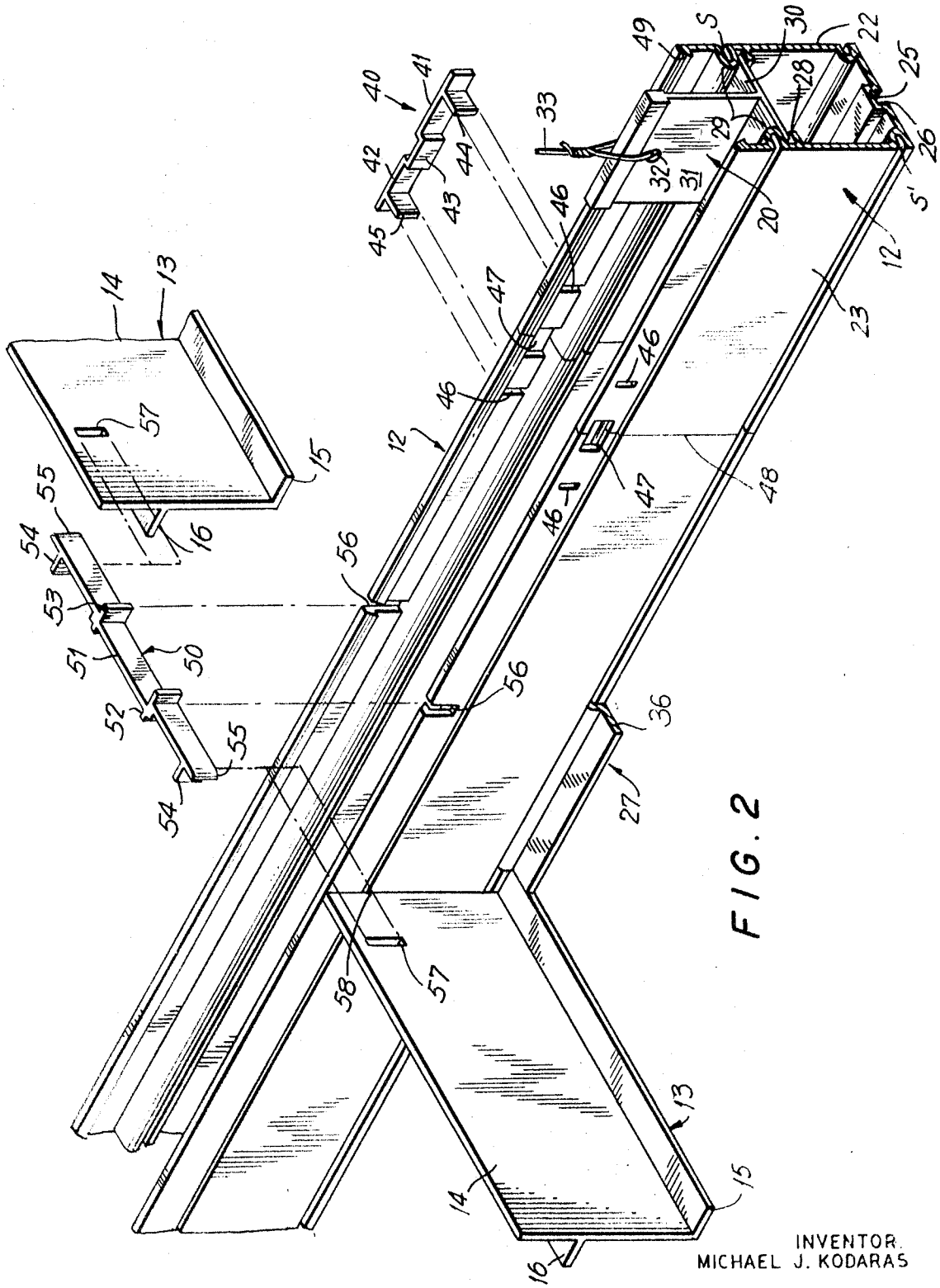

FIG. 2

INVENTOR.
MICHAEL J. KODARAS

BY

ATTORNEY

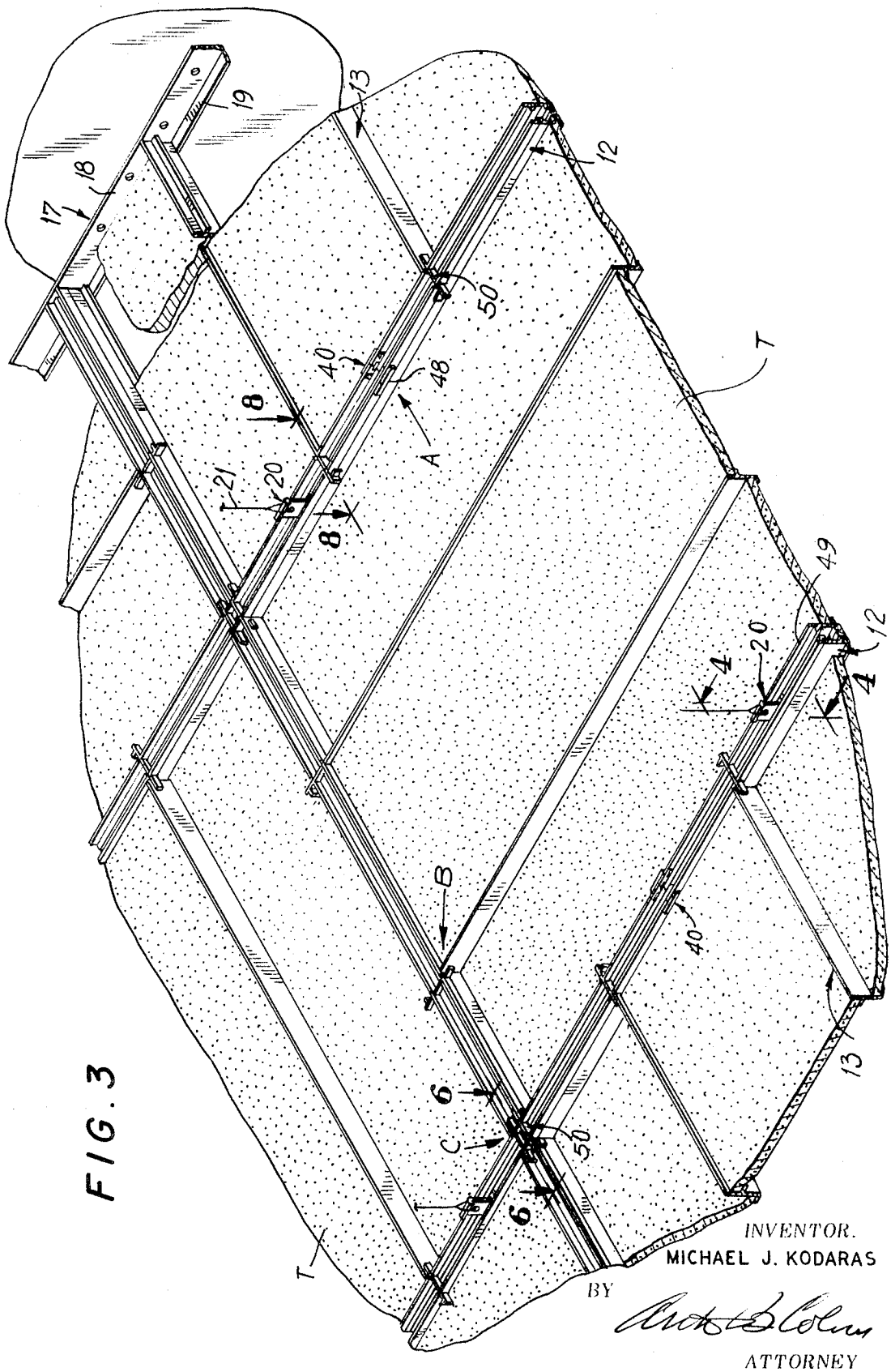

FIG. 3

INVENTOR.
MICHAEL J. KODARAS

BY

ATTORNEY

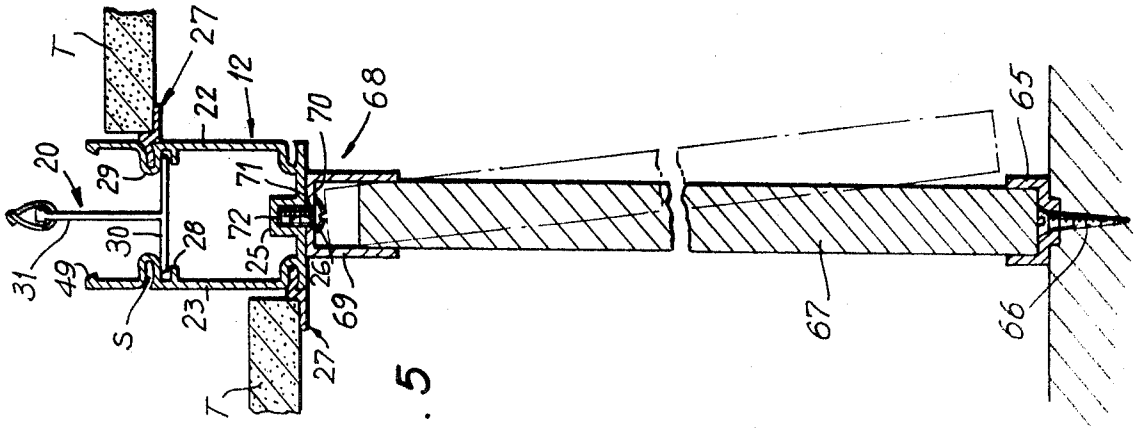

FIG. 5

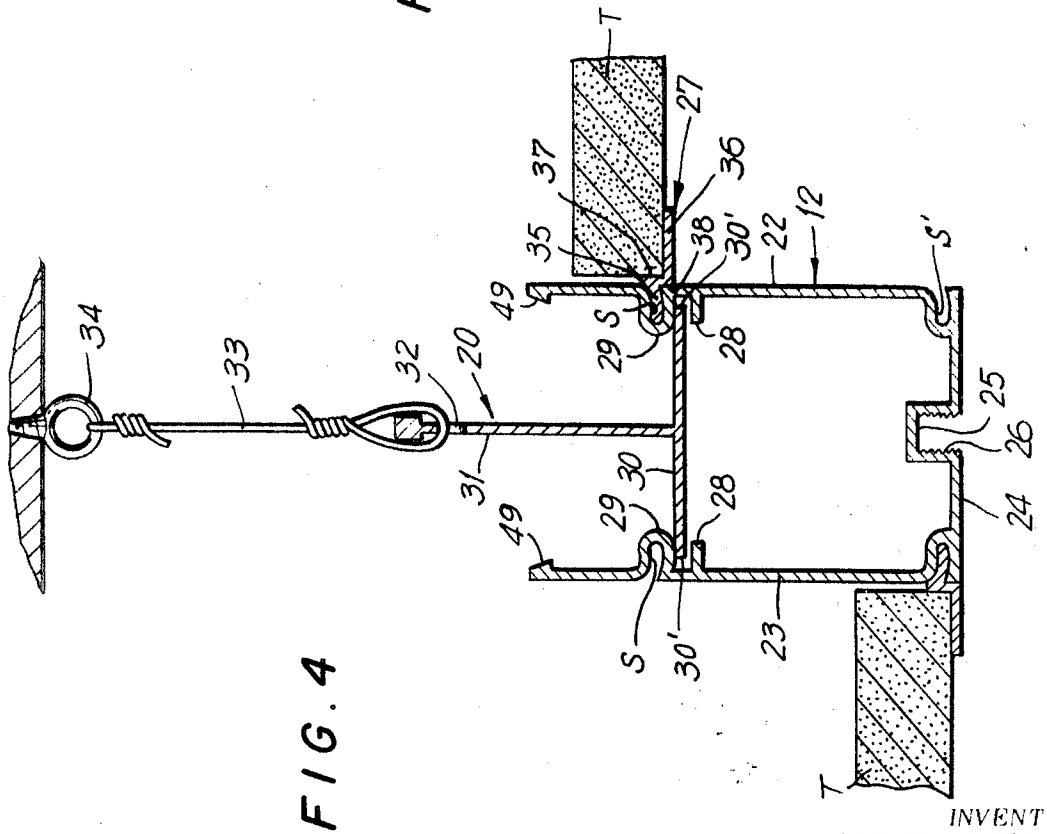

FIG. 4

INVENTOR.
MICHAEL J. KODARAS

BY

ATTORNEY

FIG. 7

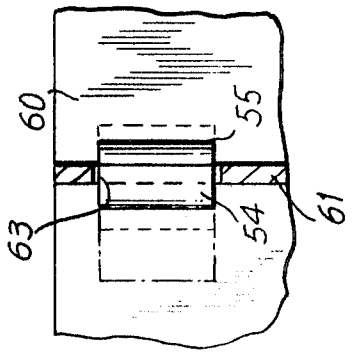

FIG. 6

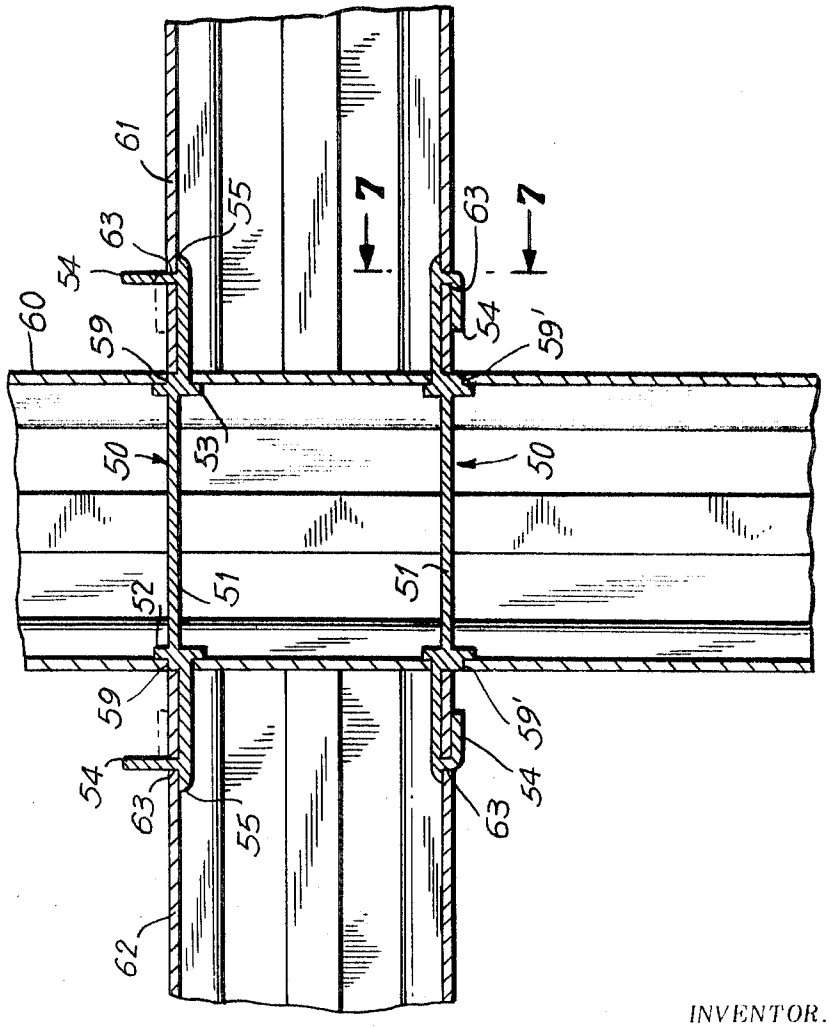

INVENTOR.
MICHAEL J. KODARAS

BY
Arthur B Colvin
ATTORNEY

CEILING TILE SUPPORT GRID SYSTEM

BACKGROUND OF THE INVENTION

1. Field of the Invention

This invention is in the field of ceiling structures, and relates particularly to the so-called "hung" or suspended ceiling which is used in new buildings or in the remodeling of old buildings to conceal existing overhead areas.

2. The Prior Art

It is known, in new constructions or in the remodeling of existing constructions, to provide a skeletal metallic grid work, to which grid work may be mounted ceiling tile sections which, in their assembled position, conceal air-conditioning ducts, wiring and the like.

Typically, a separate ceiling grid is installed in each partitioned room or area. Such ceiling grids are usually flimsy, functioning merely as tile supports. Where it is desired to subdivide an area having a "hung" ceiling, it is imperative, for structural rigidity, that at least a portion of the grid work of the hung ceiling be cut away, to provide access to the hidden structural support members or building ceiling.

The partition must be extended upwardly beyond the suspended ceiling in order that it may be firmly attached to the under surface of the building structure thereabove. This arrangement is time consuming and costly, and does not lend itself to ready relocation of the partitions when it is desired to rearrange the subdivisions in the chamber or room.

Heretofore, suspended ceiling installations have embodied tile support structures wherein the tiles are held in coplanar alignment, providing an appearance which is relatively uninteresting and not in conformity with the requirements of modern architectural design which leans toward the use of three-dimensional concepts in interior surfaces of the building.

SUMMARY OF THE INVENTION

The invention may be summarized as relating to an improved suspended ceiling grid construction which may be readily fabricated at a relatively low cost, which may be installed with no special tools or equipment, and which, when installed, will provide an extremely rigid frame or structure capable of supporting the upper edges of partitions against lateral deflecting forces and thereby eliminating the need for obtaining access to the areas above the ceiling for initial installation of the partitions or when it is desired to repartition the room area.

The partition grid structure is adapted to support adjacent ceiling boards in different planes, thus providing an interesting ceiling treatment.

The interrelationship of the displacement of the support structures for the boards at different heights and the rigidifying effect of the boards themselves, when positioned, results cumulatively in an unusually rigid grid, permitting the grid structure itself to act as the upper receiver of a partition in the manner aforesaid.

It is accordingly an object of the invention to provide an improved suspended ceiling grid construction.

It is a further object of the invention to provide a construction of the type described in which installation of individual boards within the grid structure may be readily effected and wherein removal of individual boards, if required for temporary access to wiring or the like, may be readily effected.

It is still a further object of the invention to provide a suspended ceiling grid structure of the type described which incorporates novel connector means for linking the transverse and longitudinal structural elements against relative movement.

Still a further object of the invention is the provision of a suspended ceiling of the type described in which a variety of heightwise arrangements of tile may be accomplished, as desired by the installer.

According to the invention, these objects are accomplished by the arrangement and combination of elements hereinafter described and more particularly recited in the claims.

To attain these objects and such further objects as may appear herein or be hereinafter pointed out, references is made to the accompanying drawings, forming a part hereof, in which:

FIG. 1 is a perspective view of a partitioned area incorporating a suspended ceiling of the type described, parts of the building superstructure being cut away better to illustrate detail;

FIG. 2 is an enlarged perspective view of certain of the components of the grid, including several types of connectors for linking structural components;

FIG. 3 is an enlarged top perspective view of a completed installation;

FIG. 4 is a vertical section taken on the line 4–4 of FIG. 3;

FIG. 5 is a foreshortened section showing details of the manner in which a partition may be located, utilizing the grid structure as its upper anchor point;

FIG. 6 is a horizontal section taken on line 6–6 of FIG. 3, illustrating a type of junction encountered and the means of connecting the same;

FIG. 7 is a magnified section taken on the line 7–7 of FIG. 6;

FIG. 8 is a horizontal section taken on the line 8–8 of FIG. 3.

Referring now to the drawings, there is diagrammatically illustrated a building configuration 10 having a grid structure 11 in accordance with the invention. The complete structure 11 comprises a series of intersecting, extruded, metallic grid-forming members. In the illustrated embodiment, two types of members are disclosed. A first board support member 12, the structure of which is best shown in FIG. 2, is generally formed in the configuration of a U. As also best seen from FIG. 2, the board supports 13 of the second type are L-shaped in conformation and incorporate a vertical web 14 having a lower board support ledge 15 extending at right angle therefrom. The members 13 include an upper board support ledge 16, which is also horizontally disposed and extends in a direction opposite to the ledge 15 from the face of the web 14 opposite the face which carries the ledge 15.

As will be appreciated from the more detailed description to follow, the two types of board supports 13 and 12 may be interconnected in a multiplicity of different intersecting positions, to provide an almost endless variety of board supporting configurations. As shown in FIG. 3, for instance, at point A a pair of supports of the first type 12 are connected in end-to-end relation, to define an essentially continuous section. At junction point B an end portion of a board support of the second type 13 is connected against a side portion of a board support of the first type. At junction point C, two end portion of board supports of the first type 12 are connected against the opposite side portions of a connector of said first type.

The grid structure is supported at its perimeter on bracket members 17 secured to the walls or bulkheads, the brackets including a vertical leg 18 and a horizontal support flange 19. The flange 19 forms a seat or support for the end portions of the grid section. Central portions of the grid structure are suspended from overhead structural support portions of the building by hangers 20 which are engaged within supports of the first type, the hangers being suspended from wires 21 secured to overhead beams or like structural members.

As will be set out in detail hereinafter, the grid structure is specifically calculated to support a multiplicity of conventional rectangular ceiling boards T, which are preferably of lightweight material. The boards T are supported in a plurality of displaced planes in a selected or random pattern, as desired. Offsetting the boards in various plans is unexpectedly considered to add significantly to the rigidity of the grid structure.

By mounting the boards in the manner aforesaid in horizontal frames or pockets which are vertically offset from each other, a mutual rigidifying effect is achieved in which the boards to a degree, act to augment the structural integrity of

the grid, thus permitting certain exposed lower portions of the grid to act as anchor points for the uppermost edges of partitions. By this means, a space having a hung or suspended ceiling in accordance with the invention may be repartitioned without the requirement of opening the suspended ceiling to effect a connection between the upper end of the partition and structural components of the building hidden by the ceiling.

Referring specifically to FIG. 4 of the drawing, the generally U-shaped support section 12 of the first type includes upwardly directed legs 22, 23 and a base 24. The under surface of the base 24 is provided with a central, downwardly opening U configuration 25 which optionally but preferably is extruded with longitudinally extending teeth or serrations 26, which serrations may, as more clearly set forth hereinafter, serve as anchor points for threaded member, which threaded member may be received at any position along the length of the support member.

The legs 22, 23 of the member 12 are provided with upper and lower, inwardly extending, arcuate slots S, S'. It will be understood that the slots S, S' define receiver pockets or channels for support ledge means 27 which are insertable endwisely into the pockets in the manner hereinafter described.

The legs 22, 23 incorporate opposed ribs 28, 28, which ribs define with the inturned portions 29, 29 an upwardly open channel receiver pocket for the mounting of the branch 30 of the inverted T-hangers 20. It will be appreciated from an inspection of FIG. 4 that the width of the branch portion is such as to permit the lateral edges thereof 30', 30' to be disposed within the space between the ribs 28 and portions 29. The fit is a loose one, to enable the T-section to be slid anywhere along the length of the section 12, where vertical support is desired.

The stem 31 of the T-hanger 20 is provided with a through aperture 32 for the lower end of a wire support member 33, the upper end of the support 33 being fixed to any desired form of overhead carrier, such as the ring member 34.

Support ledge means 27 also comprises extruded sections. The ledge means 27 includes an anchor portion 35 for reception within the slots or channels S, S', and a board support portion or flange 36. An integral vertical connector 37 is disposed between the anchor and support portions. The anchor portion 35 is arcuate in vertical section, and it will be appreciated that it is inserted into locked engagement with the channels or slots S or S' by tilting the support 37 at an upward angle relative to the horizontal and urging the anchor portion into the slot with a combined inward and downward pivotal movement. The portion 38 of the ledge means 27 forms a stop shoulder by its engagement against the outermost edge portion of the walls 22, 23 adjacent the slots.

From the foregoing it will be appreciated that once inserted into position in the manner aforesaid, the ledge means cannot be readily removed except by a reverse upward pivotal and outward movement. More specifically, a pure horizontal movement will be ineffective to dislodge the ledge means.

Similarly it ill be understood that when the boards T exert downward pressure against the ledges, such pressure augments the locking engagement of the ledge means in the slots or channels S, S'.

It will be further appreciated that the support portion 36 of the ledge means is disposed somewhat below the slots or channels, the upper surface of the support portion being preferably substantially aligned vertically with the slots. The stop shoulders 38 engage the walls 22, 23 of support element 12 at a point below the entrance of the slots.

Referring now to FIG. 2, it will be seen that the grid structure defines a series of frames or perimeters within which the boards may be supported against downward displacement, which frames or perimeters are formed on support sections 12 of the first type by the board support portions or flanges 36 and, in the case of board support sections of the second type, by one or the other of the support ledges 15 or 16 formed integrally with the second type sections.

It will be observed that the geometry of the second type sections is such that when the sections of the second type are fixed in end-abutting relation against a section of the first type, both of the ledges 15 and 16 will be precisely in alignment with the upper, supporting surface of a support ledge means inserted into an upper lot S or a lower slot S'.

As previously mentioned, sections of the first type may be mounted in end-to-end relationship to form, in essence, extended lengths, or in end-to-side relationship.

Turning first to the formation of an end-to-end connection, i.e., a junction of the type identified as "A" in FIG. 3, there is shown in FIG. 2 the clip or locking member 40 especially adapted to secure the sections in the manner stated. The locking member 40 includes a pair of extension legs 41, 42, a central U-shaped link portion 43 connecting the legs, and bendable tab portions 44, 45.

Sections 12 are prepared to be joined by the clip 40 by forming each clip receiving portion of the section with a tab-receiver slot 46, a central clearanceway 47 being cut in the two sections adjacent their abutment line 48, to provide clearance for the U-shaped link portion 43.

As will be evident from FIG. 2, the opposite sides of the sections 12 to be joined are also slotted and cut away in the manner above described. A clip 40 is inserted into joining position of each side of the sections by passing the link portions 43 through the clearanceways 47 and the tabs 44, 45 through the slots 46, 46 The tab are thereafter bent over so as to lie parallel with the walls 22 and 23.

It will be understood that when the clips 40 are secured to each of the two sidewalls of the section 12 in the manner aforesaid the sections will be securely locked together. When properly bent over, the tabs 44, 45 will not project inwardly beyond the depth or thickness of the barbs 49, 49 formed at the upper terminal end of the legs 22, 23. As will be readily recognized, the clips 40 may be easily fabricated by severing short lengths of an appropriate extrusion.

In FIG. 2 there is also shown the means for forming a junction between the end portion of a section 13 of the second type and a side portion of a section 12 of the first type, i.e., a junction of the type "B" as illustrated in FIG. 3.

In the formation of such a junction, a clip member 50 is employed. The clip member 50 includes an elongated web 51 having a pair of stop shoulders 52, 53 equally spaced from the longitudinal center of the web. A pair of locking tabs 54, 54 extend from the web 51 adjacent the lateral terminals ends 55, 55 of the web.

The section 12 is prepared for receiving the clip 50 by cutting transverse slots 56, 56 at opposed positions downwardly from the upper terminal ends of the legs 22, 23 of the section 12. A tab receiver slot 57 is formed in each section 13 of the second type, in spaced relation to the butt end 58 of the section which lies against the section 12. The slots 57 are spaced from the end a distance calculated to permit them to receive a tab 54. The clip is disposed within the transverse slots 56, 56 of the first connector 12. A tab 54 is inserted through the complementally formed slot 57, the tab being thereafter bent inwardly over the surface of the second section 13 so as to lie parallel with the web 51 of the clip. The position of the parts of a formed joint is shown in FIG. fig. 8.

It will be appreciated that if desired, and depending upon the grid structure, one or two of the sections 13 of the second type may be connected by a single clip 50 to the first type section 12.

It will be further appreciated that in the connected position, the board-suporting flanges or ledges 15, 16 of the connector 13 are preferably vertically displaced a slight distance from the channels S and S' of the section 12. By this construction, the bracing influence of the end portions of the flanges 15, 16 against solid components of the section 12 are advantageously employed to limit or restrict the possibility of any pivotal movement of the second section relative to the first section about the vertical axis defined by the end portion of the second section. If the flanges were disposed in alignment with slots S, S', the bracing effect would be lost, with a consequent substantial loss of rigidity.

There is disclosed in junction C, as shown in FIG. 3, a connection defined by the intersection of two sections 12 of the first type. Details of the connection are shown in FIGS. 6 and 7.

It will be appreciated that the connection of FIG. 6 is effected by using two of the clip structures 50. In the formation of a type C-junction, cross slots 59, 59, 59', 59' are formed in the continuous section 60. The end-abutting sections 61, 62 are formed with cutout slots 63 for receipt of the bendable tabs 54, the tabs being bent over as shown in FIGS. 6 and 7 after positioning of the various sections 12.

It will be observed that in the form of both the type B- and the type C-connections, the stop shoulder 52, 53 engage against the inner surfaces of the walls 22, 23 to fix the transverse position of the clip. Then, when the tabs are bent over, an extremely tight locking against each side of the continuous section 12 is effected.

In FIG. 5 there is shown, in somewhat oversimplified form, the means by which a partition may be mounted, utilizing the under surface of the grid to provide lateral support for the upper edge of the partition.

In this embodiment, 65 is an extended base channel of general U-shape, mounted to the floor by fastening means 66 and forming the lower support portion for the partition structure 67. The upper support 68 for the partition is defined by an inverted U-shaped extrusion 69, the branch portion 70 of which is affixed to the under surface of an extended length of section 12 of the first type.

For purposes of attachment, holes 71 are cut through the branch 70 at selected intervals. Machine screws 72 are passed through the holes 71, the shank portion of the screws being tightly threaded into the teeth or serrations 26 which line the walls of the downwardly open U-configuration 25. Obviously, the upper support 68 should be in precise registry with the lower support 65.

The partition 67 is mounted by angularly disposing the partition—see dot and dash position, FIG. 5—forcing the partition upwardly to its maximum extent, i.e., until the lower partition edge is above the uppermost limiting ends of the vertical portions of base channel 65. The panel may then be swung to its solid-line position and dropped downwardly so that its lower edge enters the U-channel of the lower support 65. Optionally, transverse fasteners may be driven through the upper and lower sections 68 and 65 into the edges of the partition to prevent any relative movement between the partition and the sections.

From the foregoing it will be evident that with a minimum of stock sections and clips there may be formed a grid construction for a suspended-ceiling device of substantial rigidity. In the normal sequence of installation, it is preferred that all of the sections 12 and 13 be affixed in the desired position and that the support ledge means 27 be subsequently installed within the appropriate channels of sections 12 of the first type, to complete in each instance a downwardly facing perimeter or support frame for ceiling boards, the ledge means 27 extending between the flanges 15, 16 of sections 13 of the second type, or between adjacent ledge means carried within the slots or channels of intersecting sections 12 of the first type. By displacing adjacent ceiling boards in one of two selected planes, a highly decorative and rigid ceiling structure is obtained.

As indicated previously, the ledge means may be inserted into or removed from receiving channels in the sections 12 only by a combined pivotal and horizontal movement. Once the boards are positioned, however, it will be observed that the side edges of the boards prevent pivotal movement of the magnitude required for releasing the ledge means. Accordingly, there is no likelihood of accidental dislodgment or disassociation of a ledge means from its inserted position after the tiles have once been positioned. However, should it be desired to obtain access to a space above the tiles, it will be readily perceived that there is no constraint against a purely upward movement of a board and a ledge means can be readily removed after such boar removal.

To expedite formation of the various cutouts, slots and grooves for interfit of the clips and sections, there may be provided dies, punches or like expedients which may be used to form and automatically locate the same.

While the drawings disclose one embodiment of the invention, they are not to be construed in a limitative sense, as it will be appreciated by those skilled in the art that modifications or variations of the structure may be made without departing from the spirit of the invention as set forth in the appended claims.

Having thus described the invention and illustrated its use, what I claim as new and desire to be secured by Letters Patent is:

1. A ceiling system for holding ceiling boards in displaced horizontal planes, comprising a structurally rigid grid suspended at its perimeter and at intermediate support positions, said grid including a plurality of first and second types of horizontal, intersecting ceiling tile support components, rigidly connected at their junctions to define a multiplicity of rectangular tile-receiving pockets, the components of said first type having along each of their side edges longitudinally extending upper and lower ledge support channels spaced apart a predetermined vertical distance, said second type of board support components including upper and lower board support flange portions projecting horizontally in opposite directions from opposite sides thereof, said flanges being spaced apart said predetermined vertical distance, means for rigidly securing components of said second type in end-abutting, perpendicular relation against a side of components of said first type, ledge means including channel anchor portions disposed in said channels, and board support portions extending in a direction opposite said anchor portions and disposed in coplanar alignment with said flange portions, thereby to define a horizontal support frame for a board.

2. A device in accordance wtith claim 1 wherein said flanges of said second-type component are vertically displaced by a set amount from the channels of said first-type component, the anchor portions of said ledge means being vertically displaced from said board support portions said set amount, whereby when said anchor portions are disposed in said channels, said board support portions are in coplanar alignment with one of said flange portions.

3. A device in accordance with claim 1 wherein said channels are arcuate in vertical section and said anchor portions of said ledge mean are of complemental arcuate conformation, said ledge means including stop-shoulder means beneath said anchor portions for limiting downward pivotal movement of said board support portions beyond the horizontal when said anchor portions are disposed in said channels.

4. A device in accordance with claim 1 and including clip means for maintaining said support components in said connected relation, said clip means including spaced shoulder portions engaging spaced portions of said first support component and limiting transverse relative movement of said clip and component, at least one extension leg on said clip projected beyond the lateral sides of said first component, a bendable tab extending normal to said leg, a slot formed in said second component of a size to receive said tab therethrough, said slot being disposed in registry with said tab when the end portion of said second component is pressed against a side portion of said first component, said tab being adapted to be bent from said normal position after said tab has been passed through said slot, thereby to lock said first and second components against relative movement.

5. A device in accordance with claim 4 wherein said clip is received within a transverse slot portion formed on said first-type component, thereby to limit relative vertical movement between said clip and said component.

6. A device in accordance with claim 5 wherein said clip includes extension legs projecting beyond both lateral edges of said first component, each said extension leg including one of said bendable tabs whereby a single said clip is adapted to connect a pair of said second components to a first component.

7. A device in accordance with claim 1 wherein said grid structure includes intersecting board support components of said first type, and clip means for holding severed sections of said component in butt-joint relation, said clip means including stop shoulder portions adapted to engage spaced portions of one said first component for limiting transverse movement of said clip and said first component, extension arms projecting from said stop shoulder portions and bendable tabs extending normal to said extension arms, said tabs extending through complementally formed slots in a second component section of said first type, and adapted to be bent over after passing though said slot, thereby to hold said two sections of components of said first type in butt-joint relation.

8. A ceiling system for holding ceiling boards in displaced horizontal planes, comprising a structurally rigid grid suspended at its perimeter, said grid including a plurality of horizontally extending, intersecting board support components rigidly connected together to define a series of rectangular components, said sections being of substantial vertical extent, at least two support means on said intersecting sections for supporting ceiling boards at one of two selected vertical positions, said support means including a pair of vertically spaced-apart channels on said sections and ledge means including channel anchor portions selectively mountable in one or the other of said channels, and tile support portions connected to said anchor portions, said ledge portions defining a frame for supporting a ceiling board, the height of said frame being variable in accordance with the channel into which said ledge means are inserted.

9. A device in accordance with claim 8, and including an extruded partition support section in the form of an inverted U, and fastener means extending between and connecting said partition support section to an undersurface of said ceiling support section.

10. A device in accordance with claim 9 wherein said undersurface of said ceiling support section includes a longitudinally extending groove, and said connector means comprises a threaded member including threaded portions in engagement with sidewall portions of said groove.

11. A device in accordance with claim 10 wherein said ceiling support sections are generally U-shaped in vertical section, inwardly projecting ribs extending along the length of said sections, inverted T-hangers including a branch portion disposed beneath said ribs and a stem extending upwardly within said channel section, said stem being adapted to be connected to depending hanger means for supporting said T-sections and, hence, said ceiling support sections.

12. A device in accordance with claim 10 wherein said wall portions are provided with lengthwisely extending teeth, said teeth being engageable with said threaded means.

13. A hung ceiling installation comprising a plurality of spaced, parallel, elongated supporting members extending across a room, means coacting with said elongated members to suspend the latter from an overhead portion of such room, each of said supporting members having a pair of vertically spaced-apart, parallel, longitudinal channels associated with each side thereof plurality of spaced transverse members extending between pairs of supporting members, a spaced pair of said transverse and longitudinal members including adjacent rectangular areas, means at the terminal ends of said transverse members for releasable engagement of said transverse members and said longitudinal members, said transverse members having an outstanding flange projecting adjacent the upper and lower extremities thereof in opposite directions, said flanges lying substantially in the same horizontal plane as one of said longitudinal channels of an adjacent supporting member, whereby the flanges in adjacent rectangular areas are disposed in disparate planes such that ceiling members in adjacent rectangular areas will be supported at differing heights.