US012200532B2

(12) **United States Patent**
Luo et al.

(10) **Patent No.: US 12,200,532 B2**
(45) **Date of Patent: Jan. 14, 2025**

(54) **DELAY BOUNDS IN INTEGRATED ACCESS AND BACKHAUL NETWORK**

(71) Applicant: **QUALCOMM Incorporated**, San Diego, CA (US)

(72) Inventors: **Jianghong Luo**, Skillman, NJ (US); **Karl Georg Hampel**, Hoboken, NJ (US); **Navid Abedini**, Basking Ridge, NJ (US); **Naeem Akl**, Somerville, NJ (US); **Tao Luo**, San Diego, CA (US); **Luca Blessent**, Whitehouse Station, NJ (US); **Junyi Li**, Fairless Hills, PA (US); **Luis Fernando Brisson Lopes**, Swindon (GB)

(73) Assignee: **QUALCOMM Incorporated**, San Diego, CA (US)

(*) Notice: Subject to any disclaimer, the term of this patent is extended or adjusted under 35 U.S.C. 154(b) by 0 days.

(21) Appl. No.: **17/382,303**

(22) Filed: **Jul. 21, 2021**

(65) **Prior Publication Data**

US 2022/0070718 A1 Mar. 3, 2022

Related U.S. Application Data

(60) Provisional application No. 63/072,764, filed on Aug. 31, 2020.

(51) **Int. Cl.**
H04W 76/12 (2018.01)
H04W 28/02 (2009.01)
(Continued)

(52) **U.S. Cl.**
CPC ***H04W 28/0236*** (2013.01); ***H04W 40/12*** (2013.01); ***H04W 76/12*** (2018.02); *H04W 92/24* (2013.01)

(58) **Field of Classification Search**
CPC H04W 28/0236; H04W 40/12; H04W 76/12; H04W 92/24; H04W 28/0268; H04W 40/02
See application file for complete search history.

(56) **References Cited**

U.S. PATENT DOCUMENTS

2015/0029846 A1 1/2015 Liou et al.
2020/0153559 A1 * 5/2020 Cheng H04L 5/0053
(Continued)

FOREIGN PATENT DOCUMENTS

EP 3927019 A1 * 12/2021 ..... H04L 69/22
WO WO-2019240657 A1 * 12/2019 ..... H04W 28/0268
(Continued)

OTHER PUBLICATIONS

Huawei (Remaining issues for BH RLC channel management, 3GPP Draft; RS-200754, 3rd Generation Partnership Project (3GPP), Feb. 2020).*
(Continued)

Primary Examiner — Lakeram Jangbahadur
(74) *Attorney, Agent, or Firm* — Procopio, Cory, Hargreaves & Savitch LLP

(57) **ABSTRACT**

A method, a computer-readable medium, and an apparatus are provided for wireless communication at an integrated access and backhaul (IAB) node. The IAB node receives one or more delay parameters from an IAB donor and determines an access PDB over an air link between the IAB node and a child node or a UE based in part on the one or more delay parameters received from the IAB donor.

27 Claims, 17 Drawing Sheets

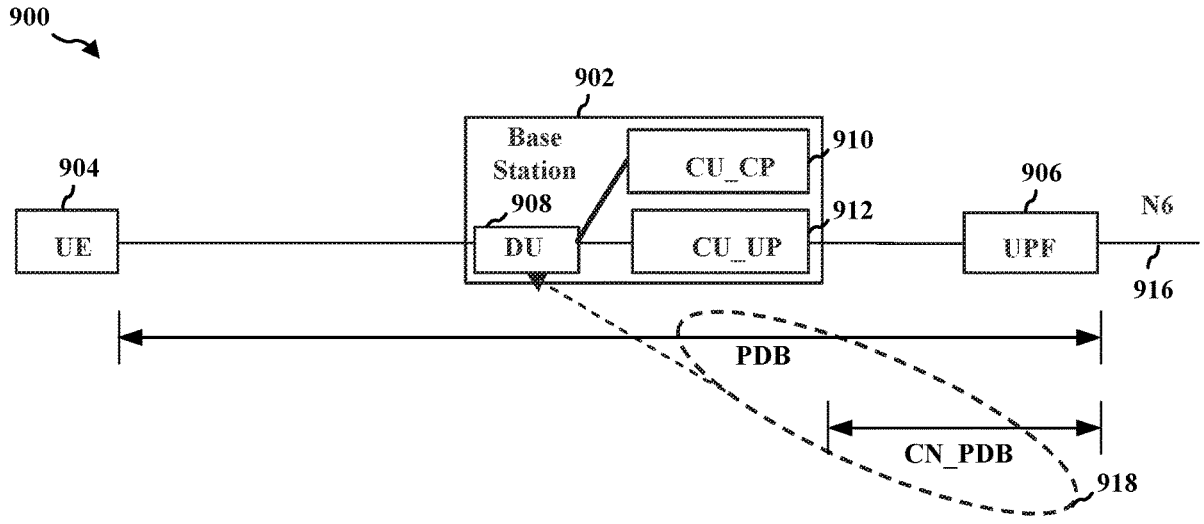

(51) **Int. Cl.**
H04W 40/12 (2009.01)
H04W 92/24 (2009.01)

(56) **References Cited**

U.S. PATENT DOCUMENTS

2020/0187040	A1*	6/2020	Tsai	H04W 24/10
2022/0038381	A1*	2/2022	Lohr	H04W 8/04
2023/0189045	A1*	6/2023	Chen	H04W 24/08 370/252

FOREIGN PATENT DOCUMENTS

WO	WO-2020029196	A1 *	2/2020	H04W 28/0252
WO	WO-2020164596	A1 *	8/2020	H04L 67/61

OTHER PUBLICATIONS

Huawei: "Remaining Issues for BH RLC Channel Management", 3GPP Draft, 3GPP TSG-RAN WG3 Meeting #107-e, R3-200754, 3rd Generation Partnership Project (3GPP), vol. RAN WG3, No. E-meeting, Feb. 24, 2020-Mar. 6, 2020, Feb. 14, 2020 (Feb. 14, 2020), XP051854198, 6 Pages, Retrieved from the Internet: URL: https://ftp.3gpp.org/tsg_ran/WG3_lu/TSGR3_107_e/Docs/R3-200754.zip. R3-200754 (TP for NR_IAB BL CR for TS 38.473) Remaining Issues for BH \RI_doc. [Retrieved on Feb. 14, 2020] Figure 2, p. 2, Line 11-Line 16 p. 2, Line 25-Line 27.

International Search Report and Written Opinion—PCT/US2021/042794—ISA/EPO—Dec. 1, 2021.

Nokia, et al., "QoS Impacts in IAB System", 3GPP Draft, 3GPP TSG-RAN WG3 NR AdHoc 1807, R3-183752, QOS Impacts of IAB, 3rd Generation Partnership Project (3GPP), Mobile Competence Centre, 650, Route Des Lucioles, F-06921 Sophia-Antipolis Cedex, France, vol. RAN WG3, No. Montreal, Canada, Jul. 2, 2018-Jul. 6, 2018, Jul. 1, 2018 (Jul. 1, 2018), XP051468037, 4 Pages, Retrieved from the Internet: URL: http://www.3gpp.org/ftp/Meetings%5F3GPP%5FSYNC/RAN3/Docs. [Retrieved on Jul. 1, 2018], Paragraph [0003], Figure 1.

Zte, et al., "Consideration on Multi-Hop Latency for IAB Network", 3GPP Draft, 3GPP TSG-RAN WG3 #109-e, R3-205168, 3rd Generation Partnership Project (3GPP), vol. RAN WG3, No. Online, Aug. 17, 2020-Aug. 28, 2020, Aug. 7, 2020 (Aug. 7, 2020), XP051915868, 9 Pages, Retrieved from the Internet: URL: https://ftp.3gpp.org/tsg_ran/WG3_lu/TSGR3_109-e/Docs/R3-205168.zip. R3-205168 Consideration on Multi-Hop Latency for IAB Network.doc. [Retrieved on Aug. 7, 2020] Paragraph [2.1.1], figures 1, 2.

* cited by examiner

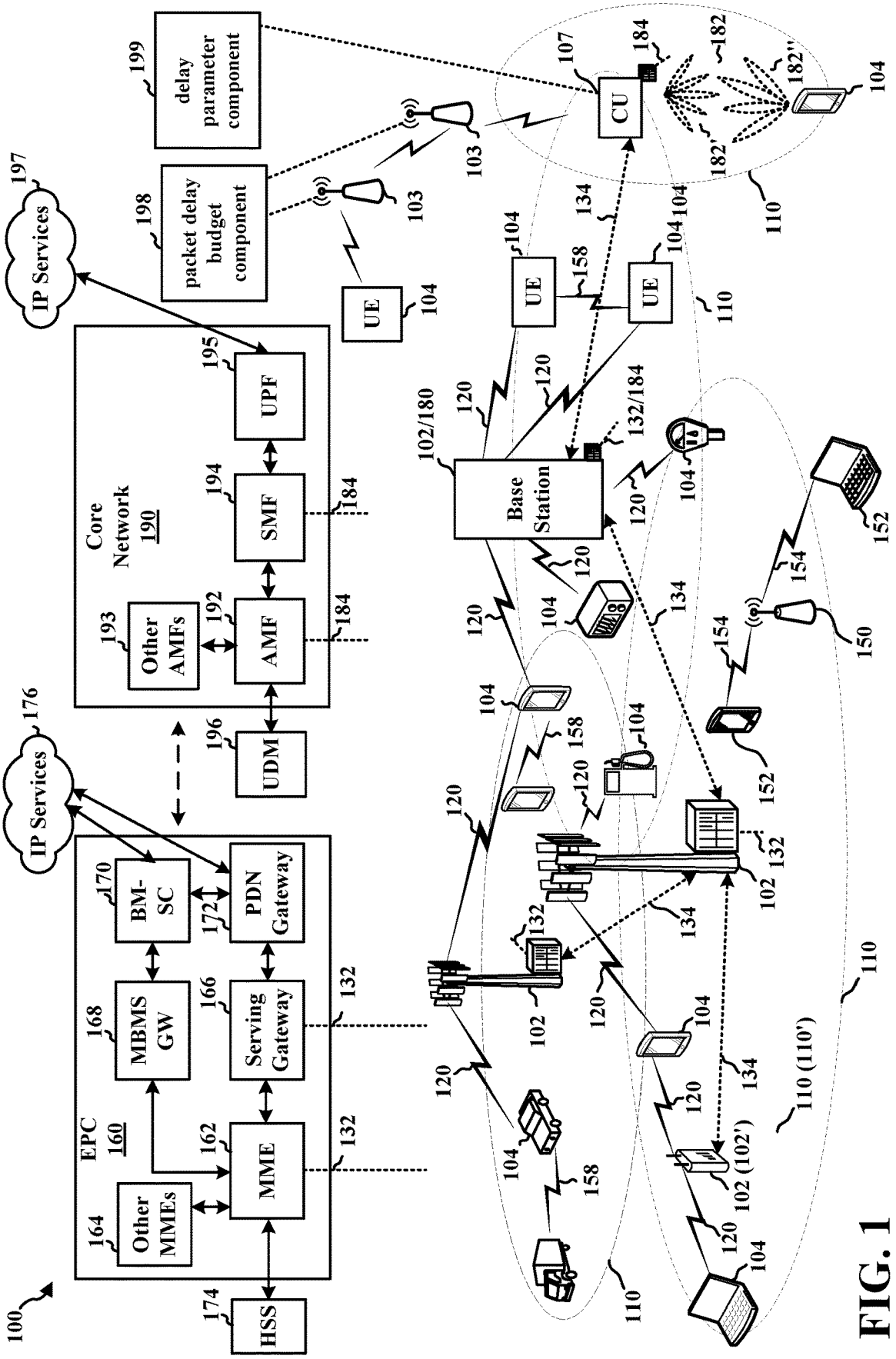
100
EPC 160
Other MMEs
164
MME
162
MBMS GW
168
Serving Gateway
166
BM-SC
170
PDN Gateway
172
HSS
174
IP Services
176
Core Network 190
Other AMFs
193
AMF
192
SMF
194
UPF
195
UDM
196
IP Services
197
packet delay budget component
198
delay parameter component
199
UE
104
103
CU
107
184
182
182'
182''
110
UE
104
158
134
Base Station
102/180
132/184
120
102
132
102 (102')
110 (110')
150
152
154

FIG. 1

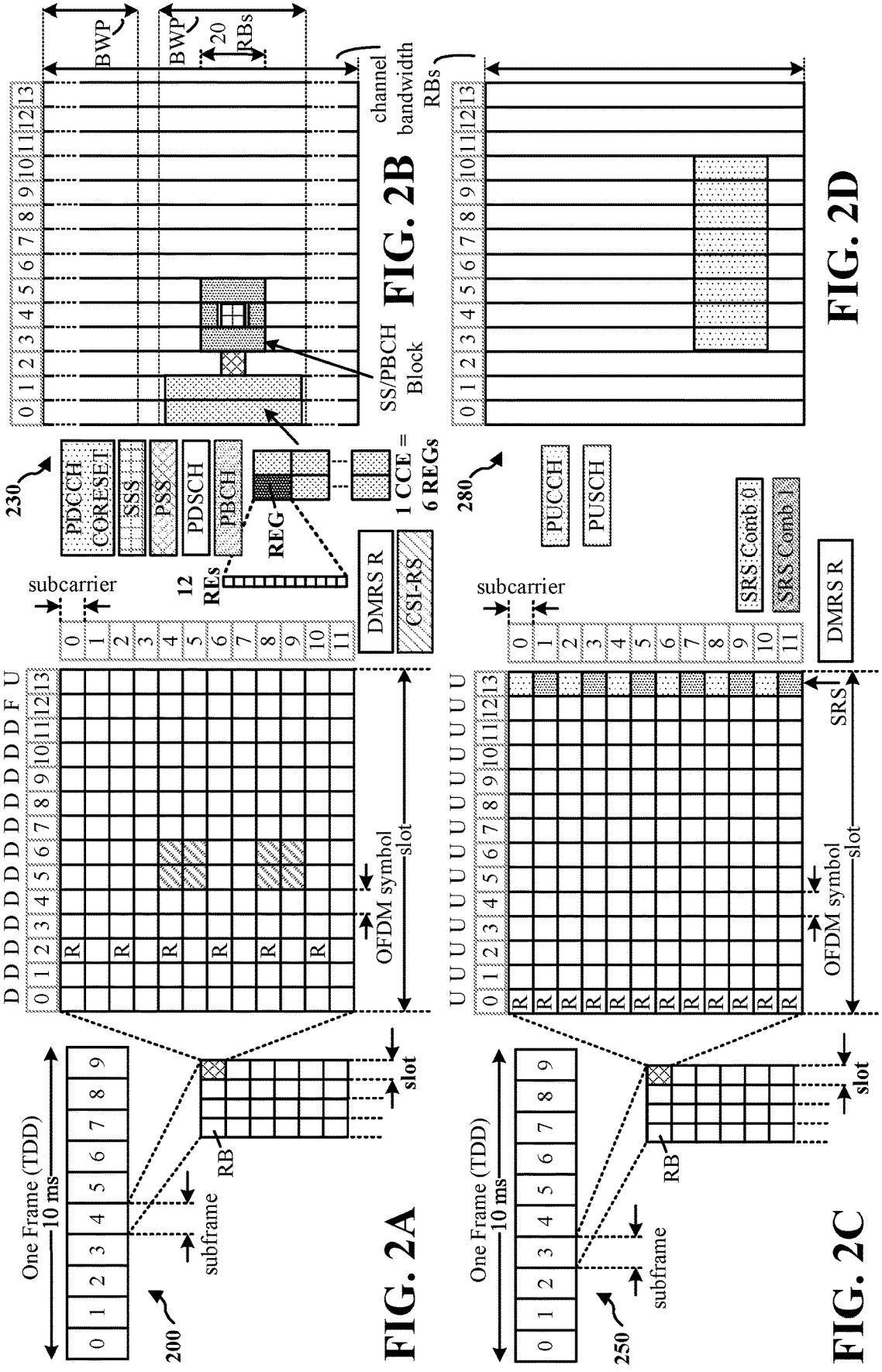
One Frame (TDD)
10 ms
0 1 2 3 4 5 6 7 8 9
200
subframe
RB
slot
D D D D D D D D D D D D F U
0 1 2 3 4 5 6 7 8 9 10 11 12 13
R
OFDM symbol
slot
subcarrier
0 1 2 3 4 5 6 7 8 9 10 11
DMRS R
CSI-RS
12 REs
REG
1 CCE = 6 REGs
230
PDCCH CORESET
SSS
PSS
PDSCH
PBCH
SS/PBCH Block
BWP
BWP
20 RBs
channel bandwidth RBs
0 1 2 3 4 5 6 7 8 9 10 11 12 13
FIG. 2A
FIG. 2B
One Frame (TDD)
10 ms
0 1 2 3 4 5 6 7 8 9
250
subframe
RB
slot
U U U U U U U U U U U U U U
0 1 2 3 4 5 6 7 8 9 10 11 12 13
R
OFDM symbol
slot
SRS
subcarrier
0 1 2 3 4 5 6 7 8 9 10 11
DMRS R
SRS Comb 0
SRS Comb 1
280
PUCCH
PUSCH
0 1 2 3 4 5 6 7 8 9 10 11 12 13
FIG. 2C
FIG. 2D

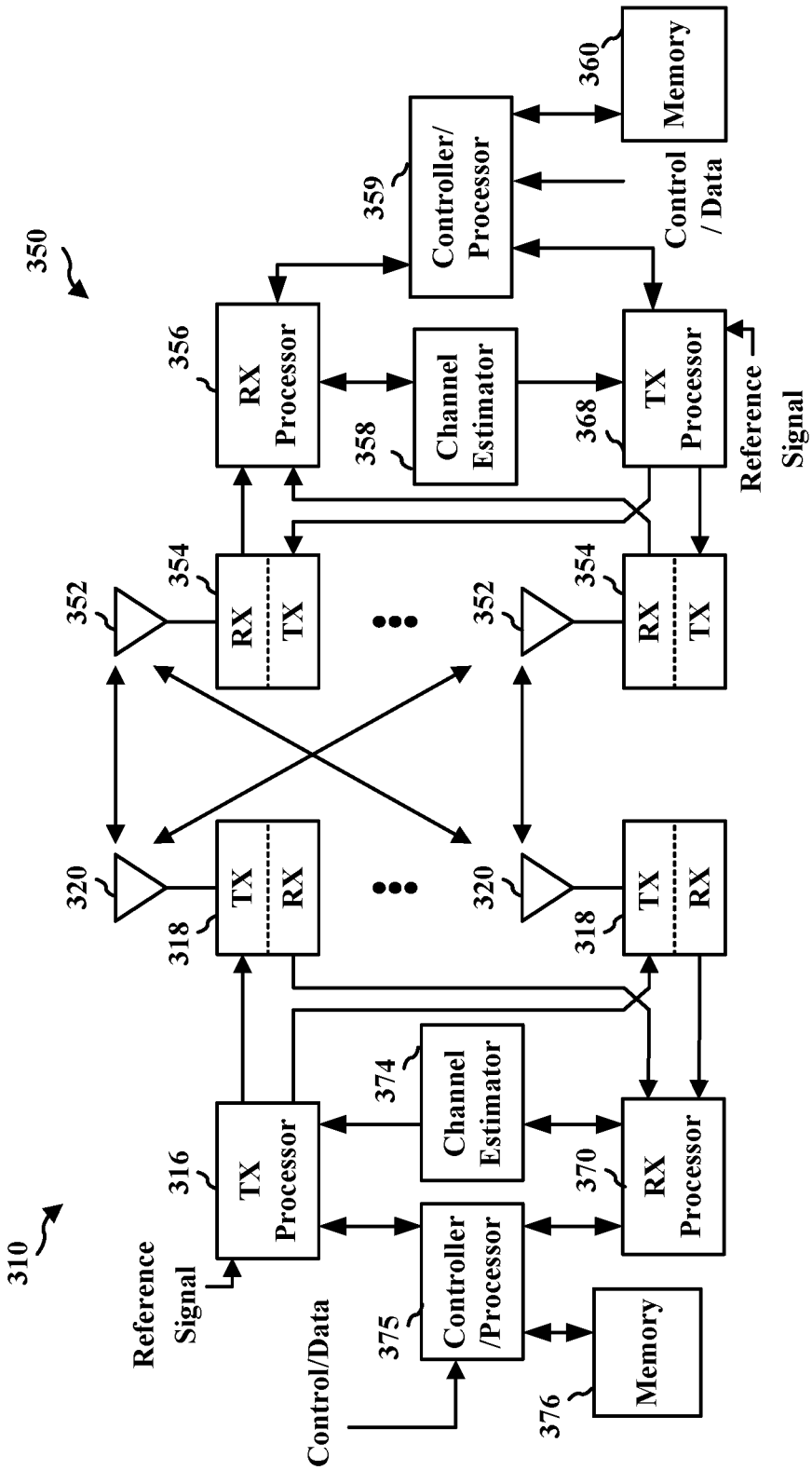
350
310
Reference Signal
Control/Data
316
TX Processor
375
Controller /Processor
376
Memory
374
Channel Estimator
370
RX Processor
318
TX
RX
320
352
354
RX
TX
356
RX Processor
358
Channel Estimator
368
TX Processor
Reference Signal
359
Controller/ Processor
360
Memory
Control / Data

FIG. 3

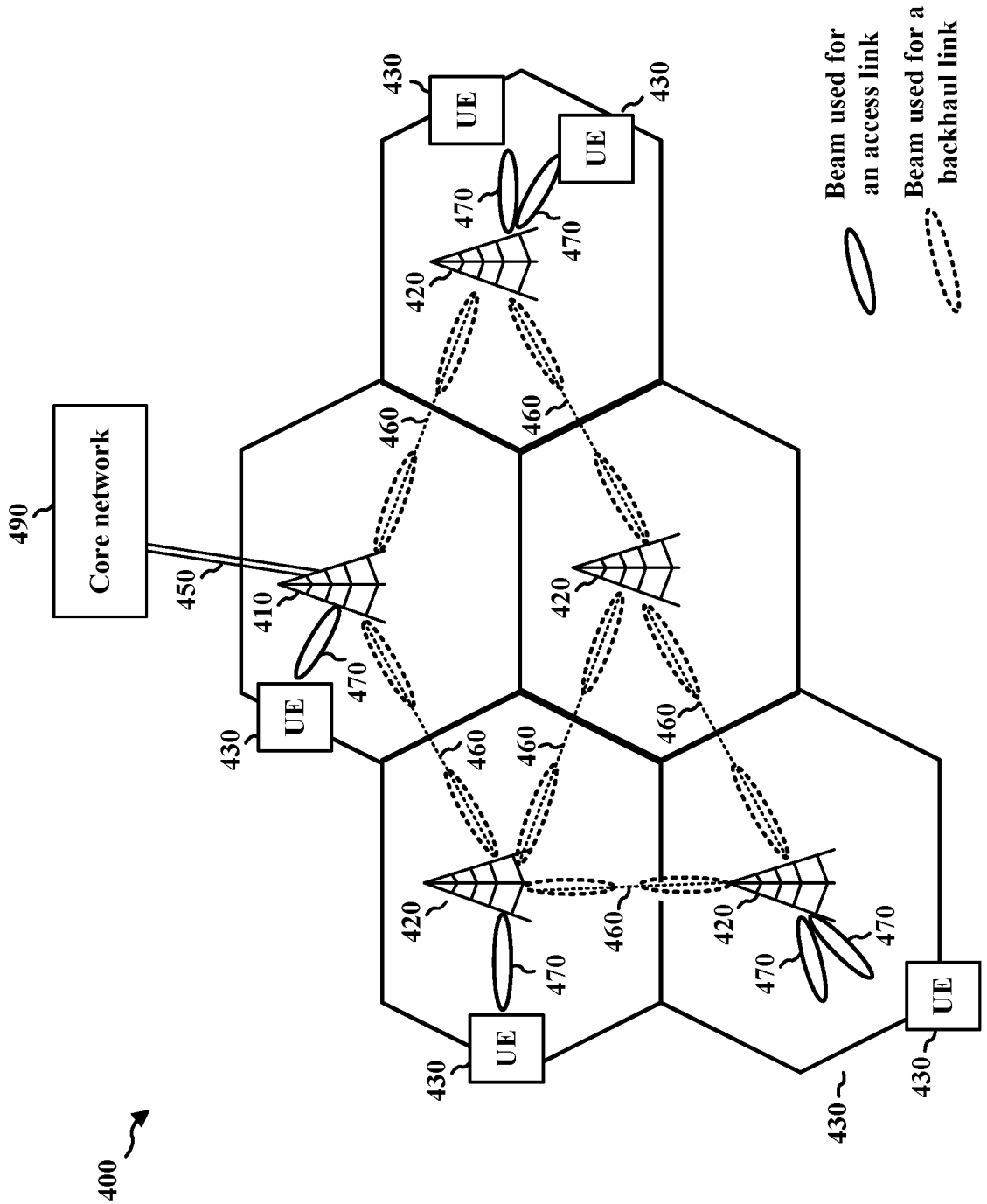
400
490
Core network
450
410
420
430
UE
460
470
Beam used for an access link
Beam used for a backhaul link

FIG. 4

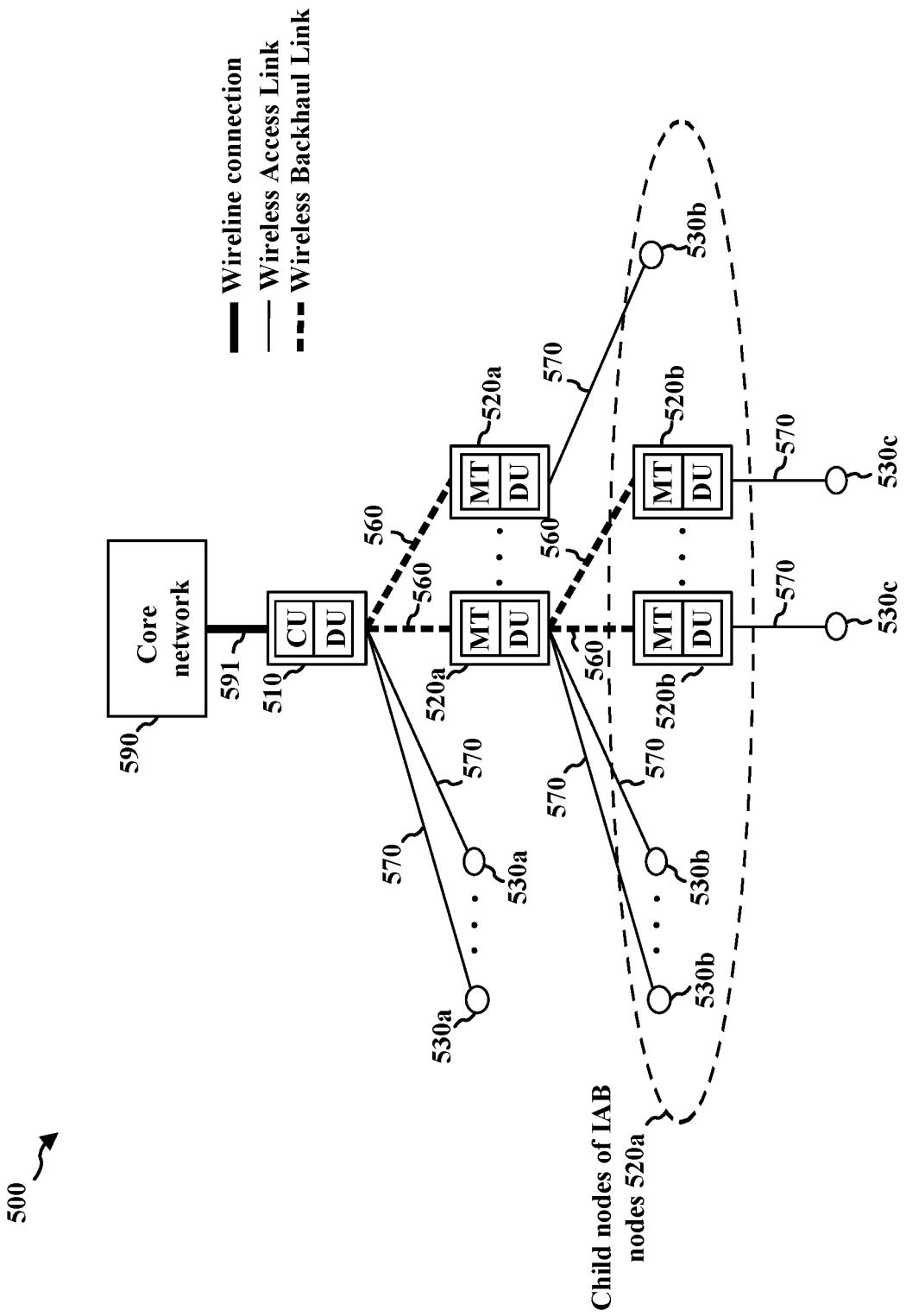
Wireline connection
Wireless Access Link
Wireless Backhaul Link
500
Core network
590
591
510
CU
DU
560
520a
520b
MT
DU
570
530a
530b
530c
Child nodes of IAB nodes 520a

FIG. 5

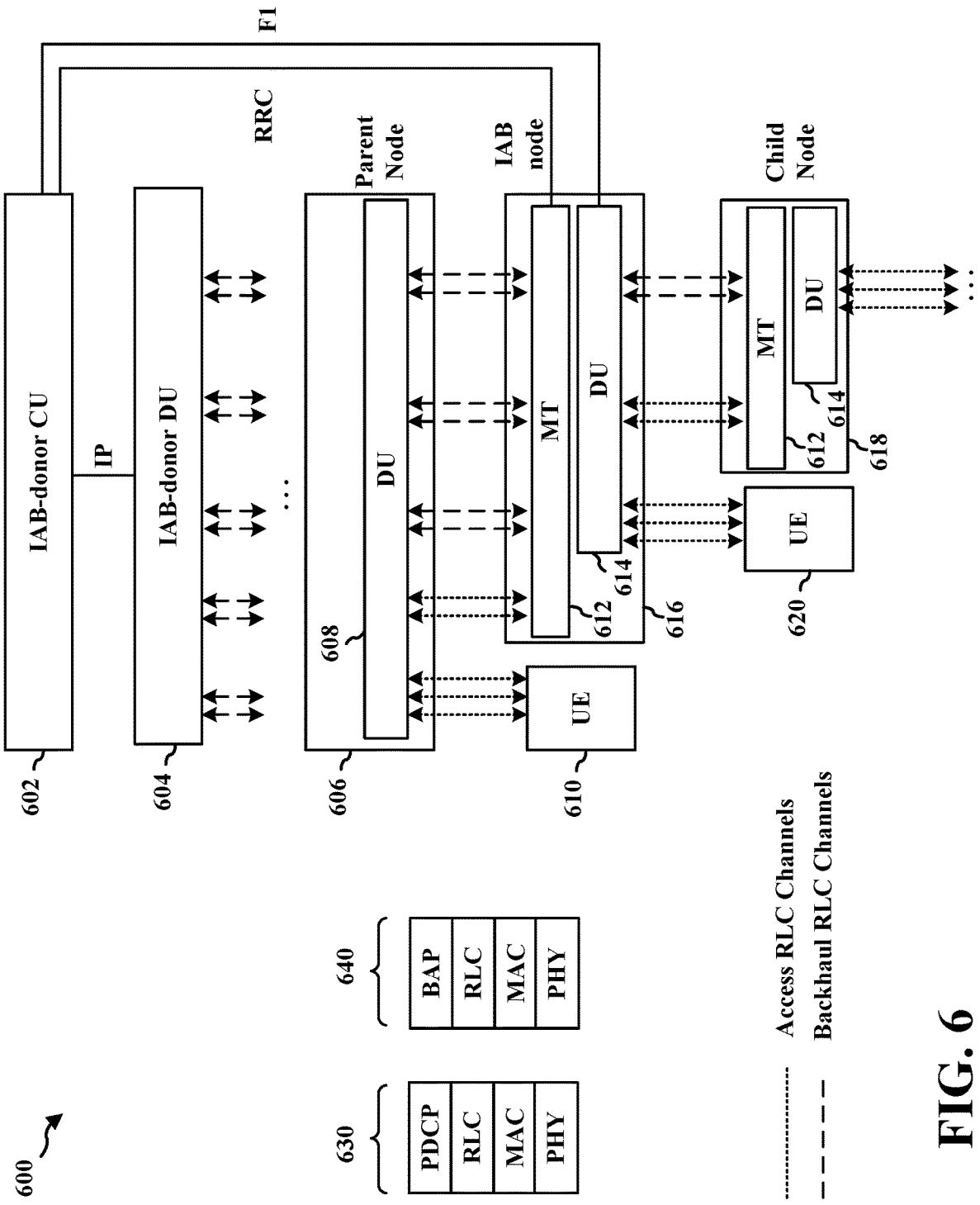
600
602
IAB-donor CU
IP
604
IAB-donor DU
F1
RRC
606
Parent Node
DU
608
610
UE
IAB node
MT
612
DU
614
616
Child Node
MT
612
DU
614
618
620
UE
630
PDCP
RLC
MAC
PHY
640
BAP
RLC
MAC
PHY
Access RLC Channels
Backhaul RLC Channels

FIG. 6

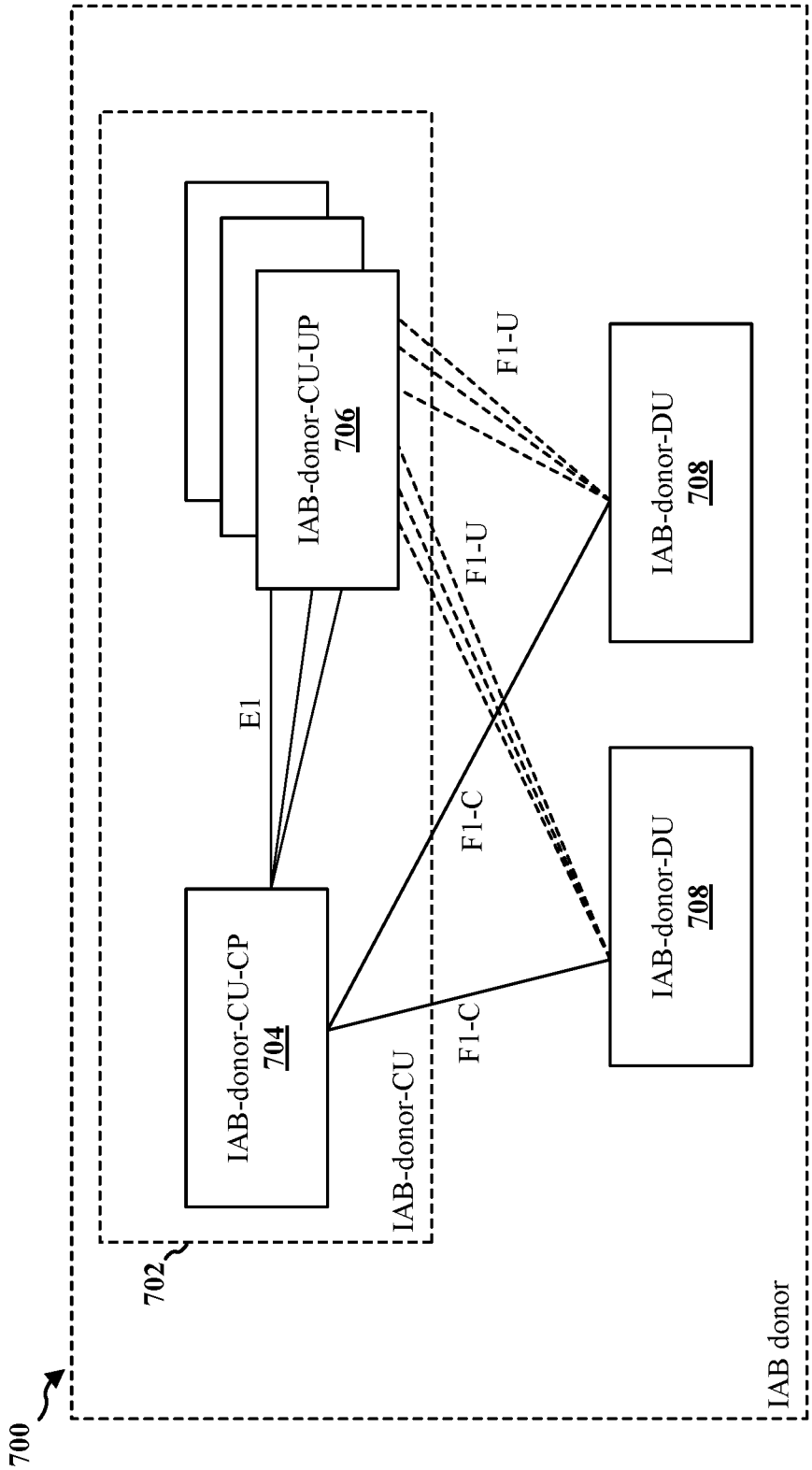
700
IAB donor
702
IAB-donor-CU
IAB-donor-CU-CP
704
IAB-donor-CU-UP
706
IAB-donor-DU
708
IAB-donor-DU
708
E1
F1-C
F1-C
F1-U
F1-U

FIG. 7

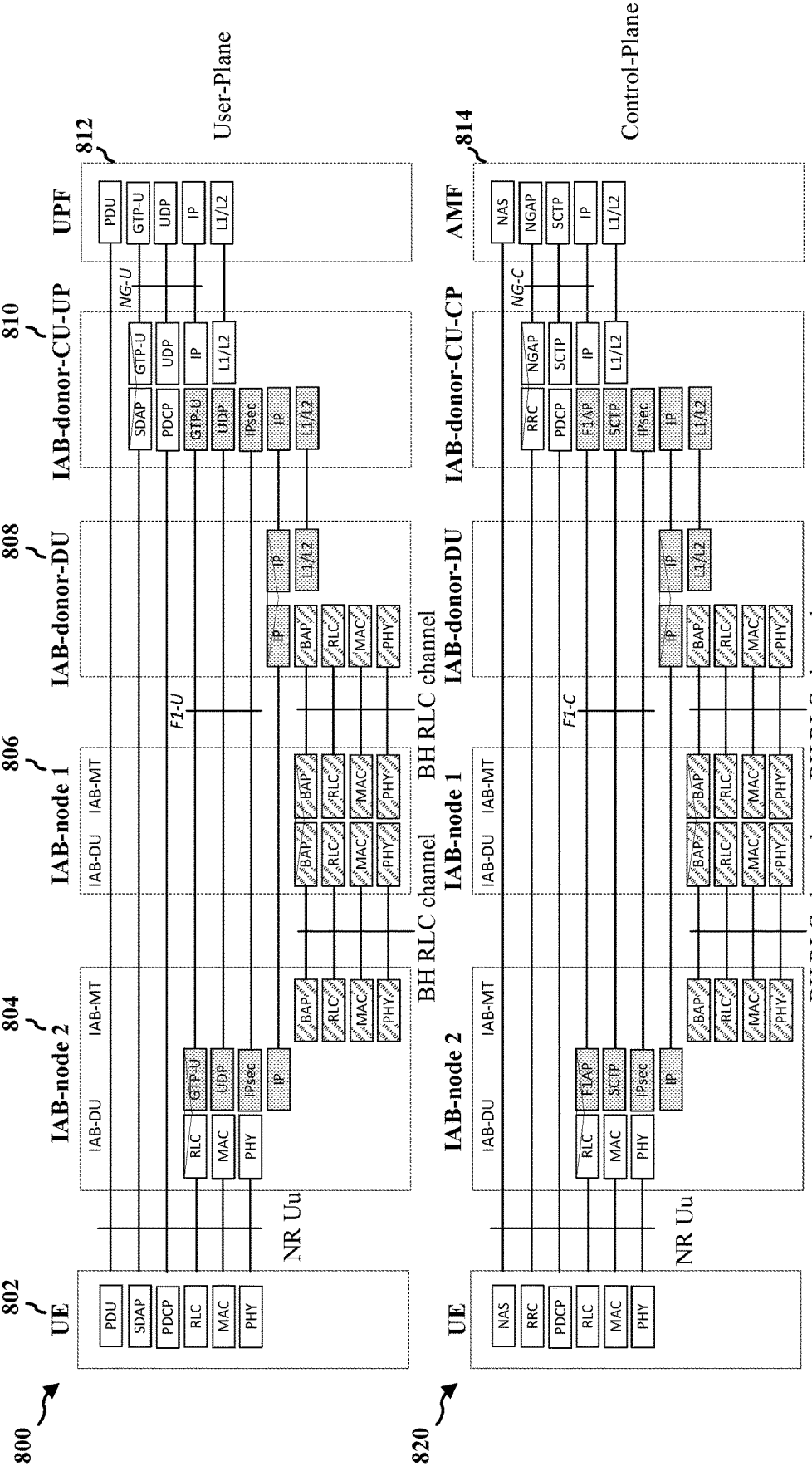
800
820
802
UE
804
IAB-node 2
806
IAB-node 1
808
IAB-donor-DU
810
IAB-donor-CU-UP
811
812
UPF
814
AMF
IAB-DU
IAB-MT
User-Plane
Control-Plane
NR Uu
F1-U
F1-C
NG-U
NG-C
BH RLC channel
PDU
SDAP
PDCP
RLC
MAC
PHY
GTP-U
UDP
IP
IPsec
L1/L2
BAP
F1AP
SCTP
NAS
NGAP
RRC

FIG. 8

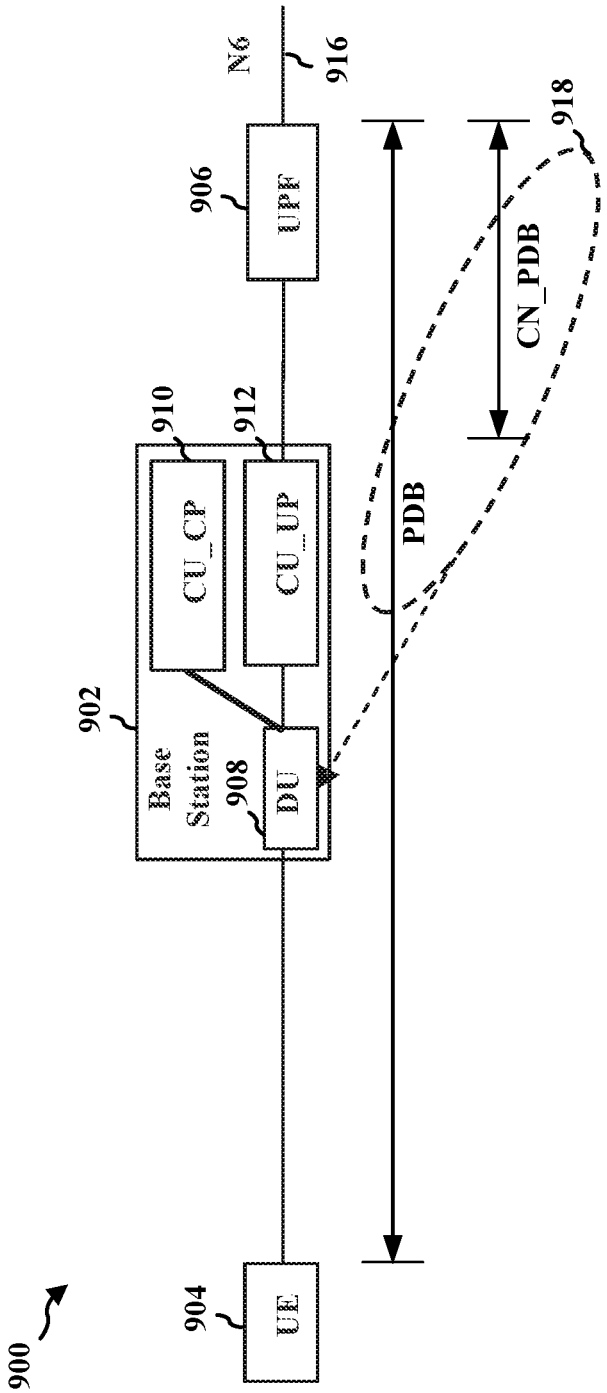
900
UE
904
Base Station
902
DU
908
CU_CP
910
CU_UP
912
UPF
906
N6
916
PDB
CN_PDB
918

FIG. 9

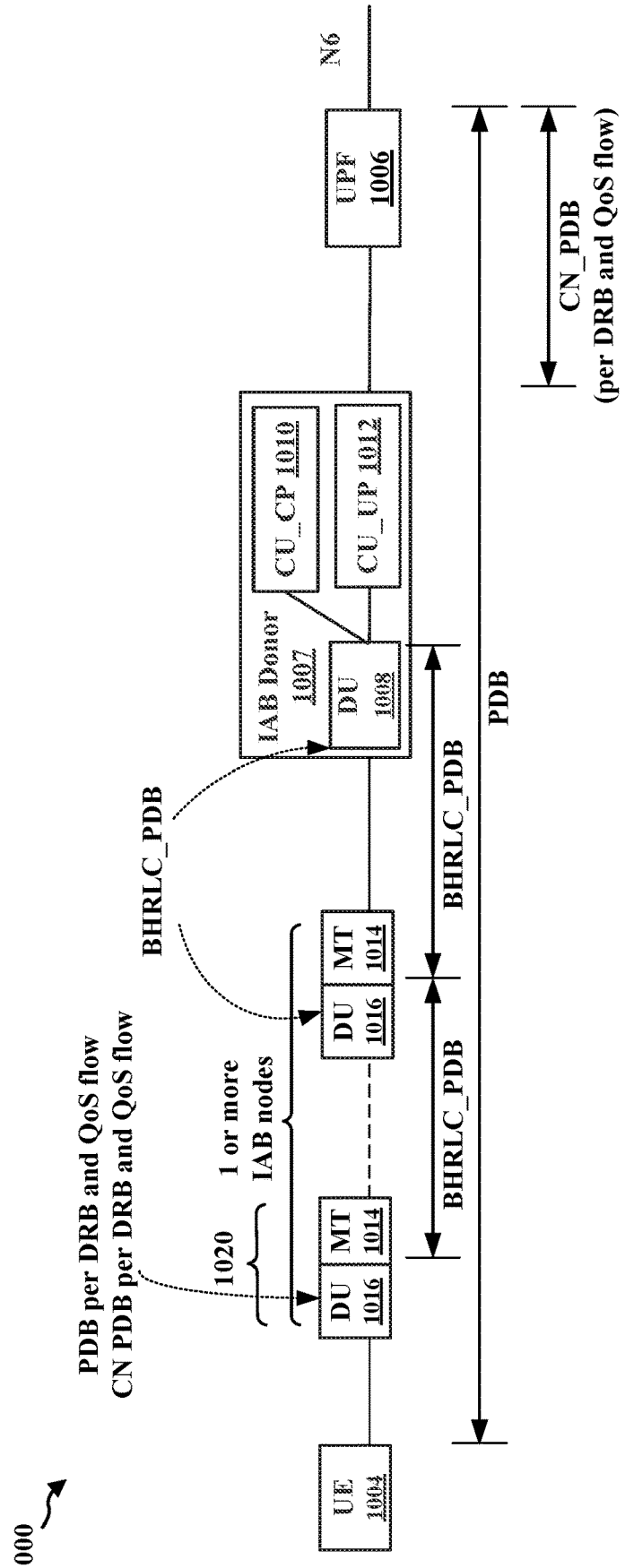
1000
UE 1004
DU 1016
MT 1014
1020
1 or more IAB nodes
PDB per DRB and QoS flow
CN PDB per DRB and QoS flow
BHRLC_PDB
IAB Donor 1007
DU 1008
CU_CP 1010
CU_UP 1012
UPF 1006
N6
BHRLC_PDB
BHRLC_PDB
PDB
CN_PDB
(per DRB and QoS flow)

FIG. 10

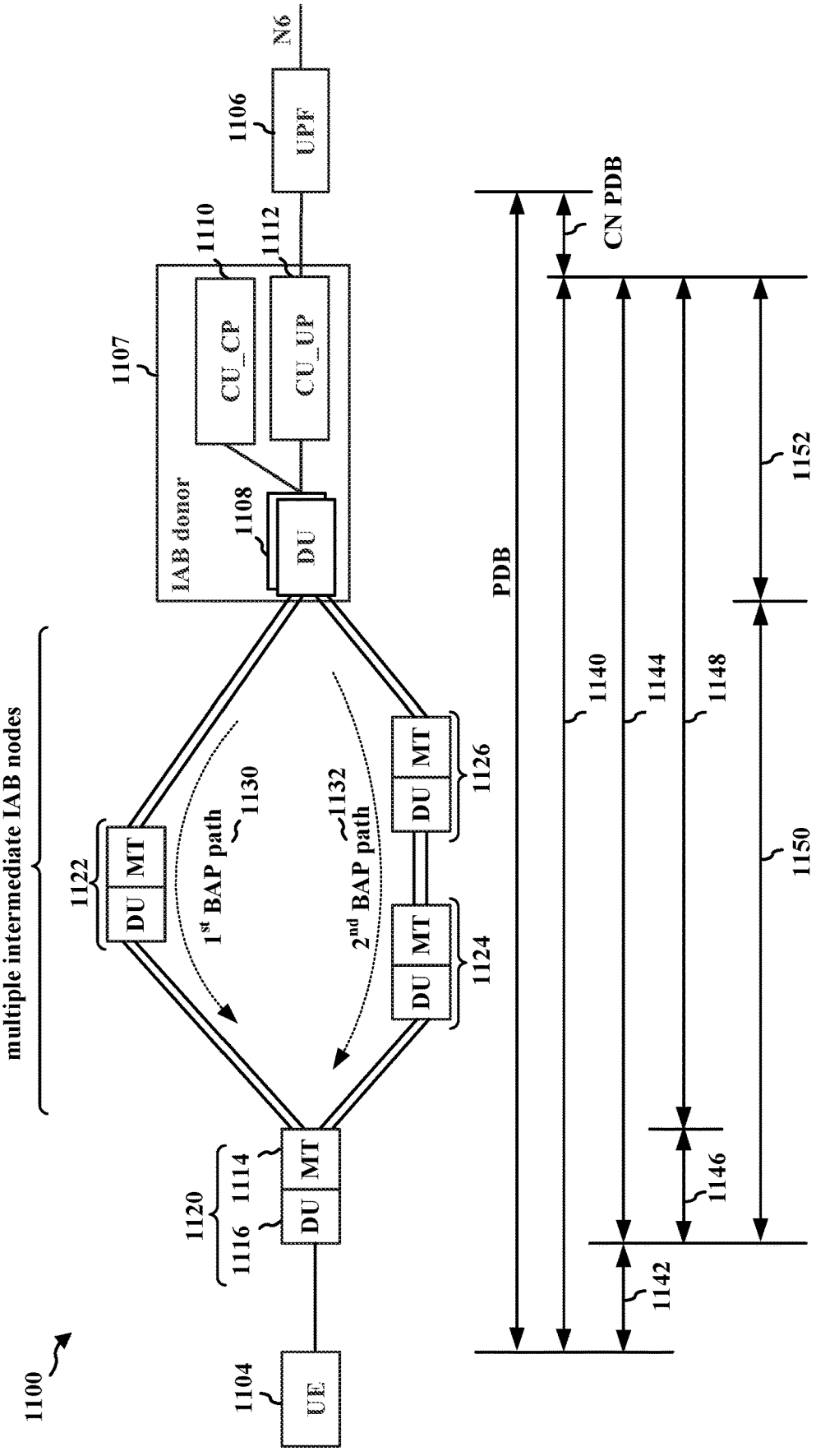
1100
1104
UE
1120
1116
1114
DU
MT
1122
DU
MT
1124
DU
MT
1126
DU
MT
multiple intermediate IAB nodes
1130
1st BAP path
1132
2nd BAP path
1107
IAB donor
1108
DU
1110
CU_CP
1112
CU_UP
1106
UPF
N6
PDB
CN PDB
1140
1144
1148
1152
1150
1146
1142

FIG. 11

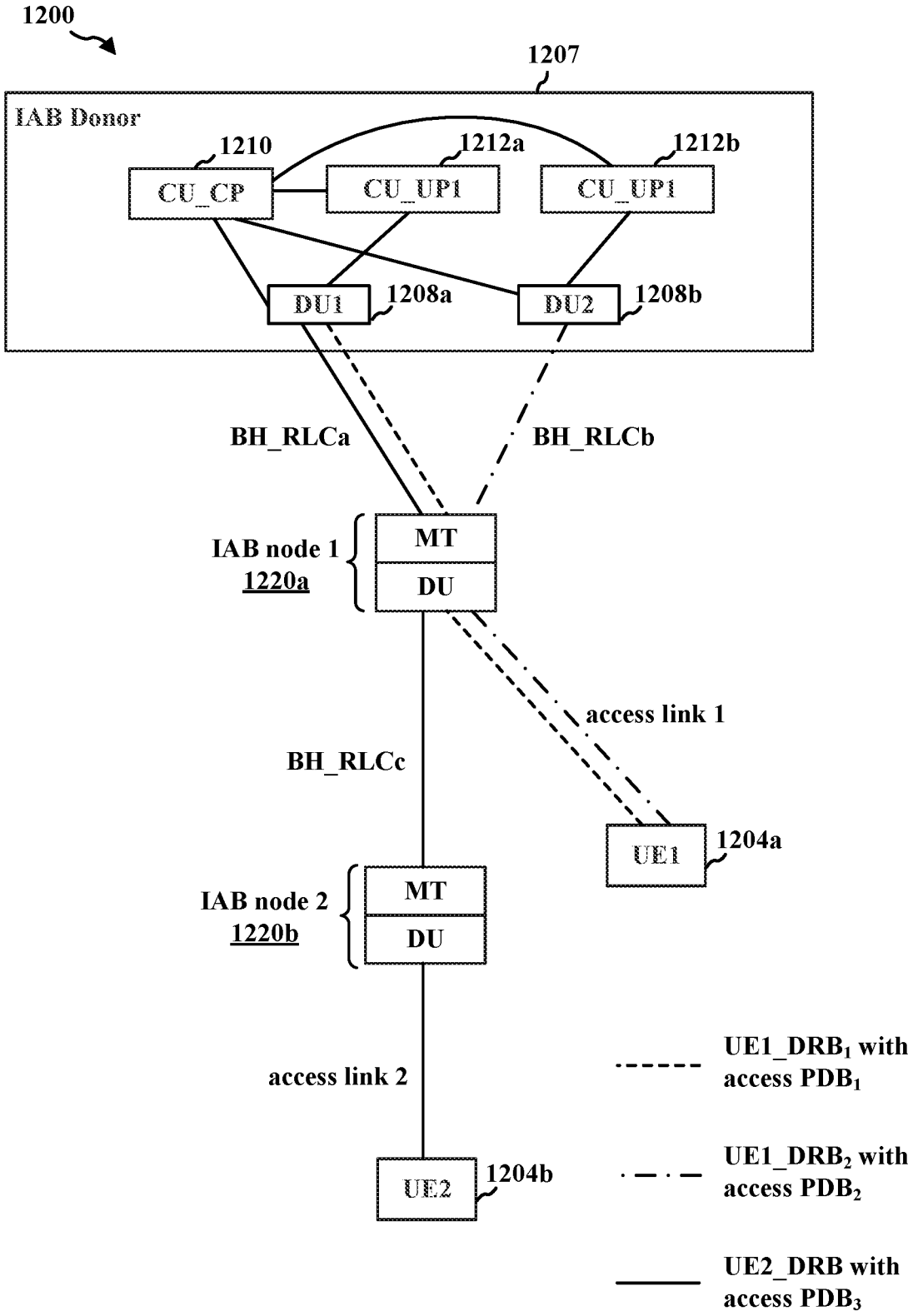
1200
1207
IAB Donor
1210
CU_CP
1212a
CU_UP1
1212b
CU_UP1
DU1
1208a
DU2
1208b
BH_RLCa
BH_RLCb
IAB node 1
1220a
MT
DU
access link 1
BH_RLCc
UE1
1204a
IAB node 2
1220b
MT
DU
access link 2
UE2
1204b
UE1_DRB1 with access PDB1
UE1_DRB2 with access PDB2
UE2_DRB with access PDB3

FIG. 12

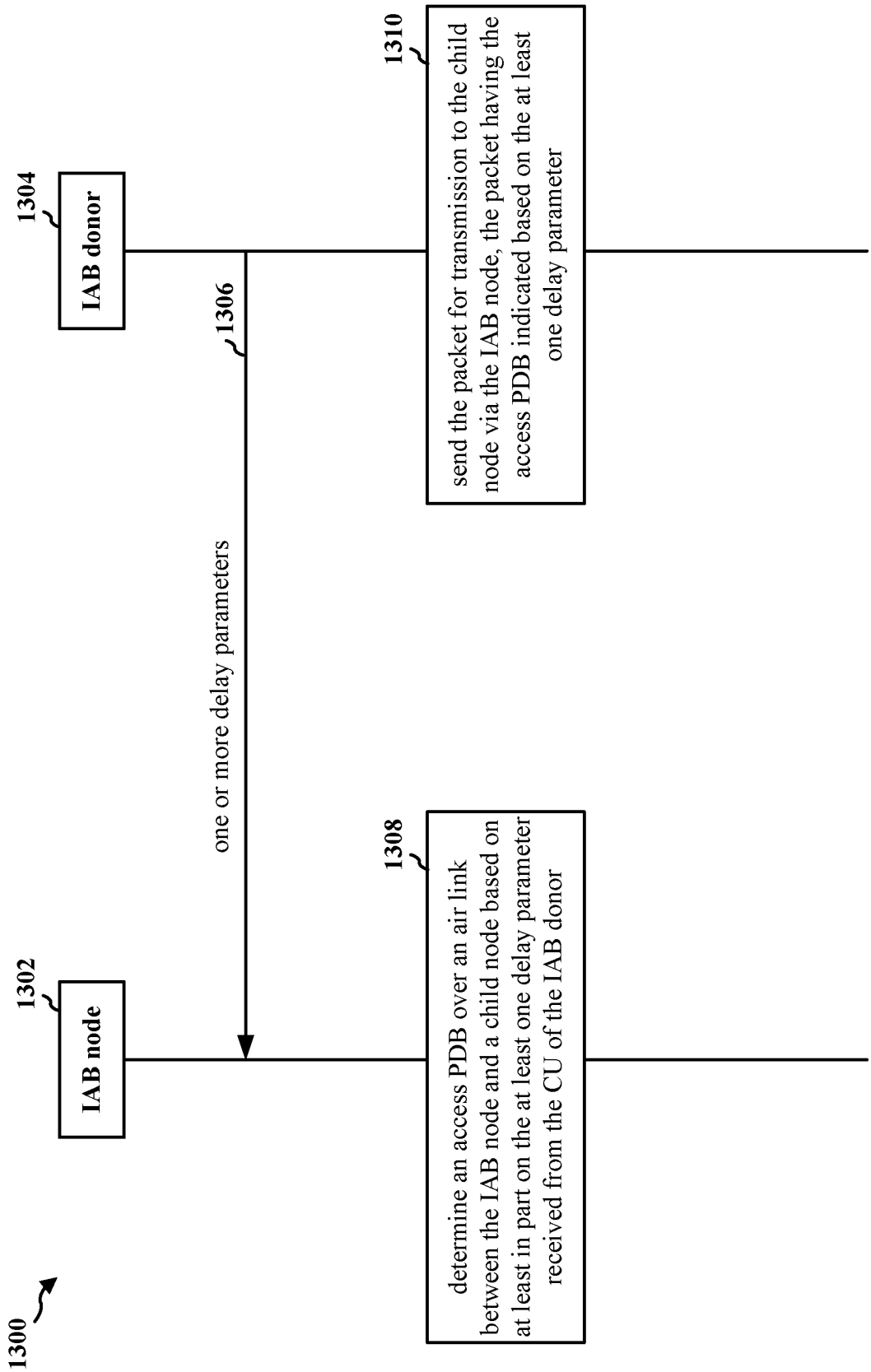
1300
1302
IAB node
1304
IAB donor
1306
one or more delay parameters
1308
determine an access PDB over an air link between the IAB node and a child node based on at least in part on the at least one delay parameter received from the CU of the IAB donor
1310
send the packet for transmission to the child node via the IAB node, the packet having the access PDB indicated based on the at least one delay parameter

FIG. 13

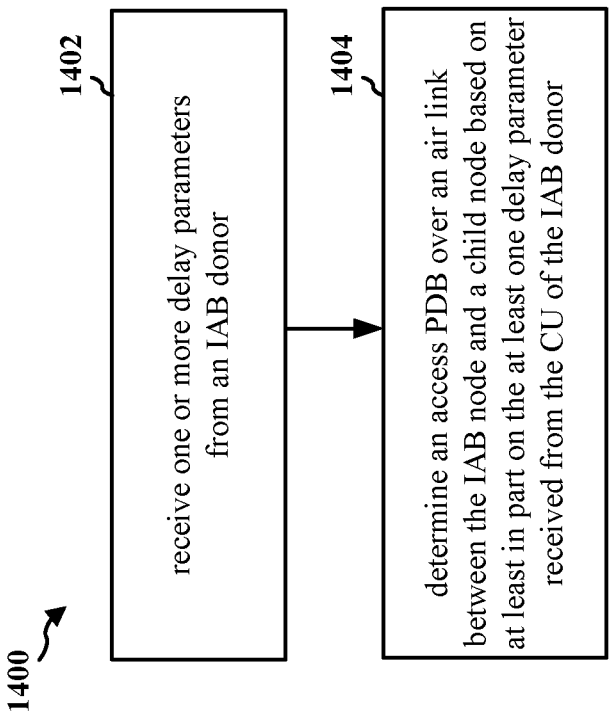
1400
1402
receive one or more delay parameters from an IAB donor
1404
determine an access PDB over an air link between the IAB node and a child node based on at least in part on the at least one delay parameter received from the CU of the IAB donor

FIG. 14

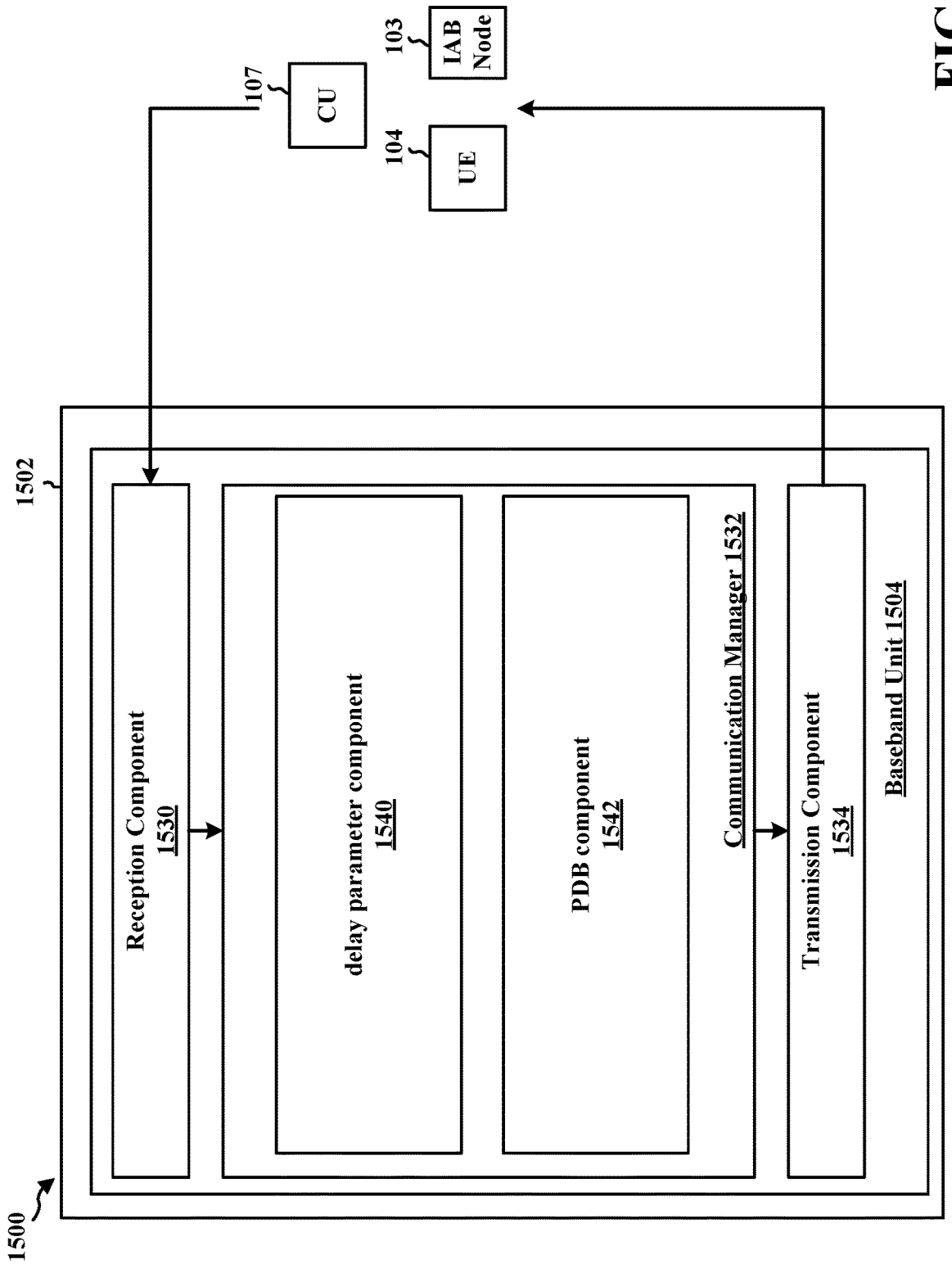
1500
1502
Reception Component
1530
delay parameter component
1540
PDB component
1542
Communication Manager 1532
Transmission Component
1534
Baseband Unit 1504
CU
107
IAB Node
103
UE
104

FIG. 15

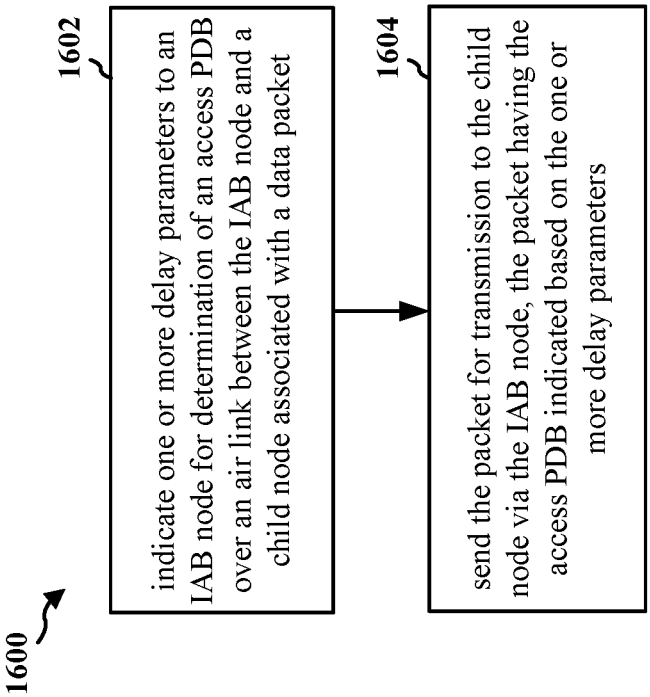
1600
1602
indicate one or more delay parameters to an IAB node for determination of an access PDB over an air link between the IAB node and a child node associated with a data packet
1604
send the packet for transmission to the child node via the IAB node, the packet having the access PDB indicated based on the one or more delay parameters

FIG. 16

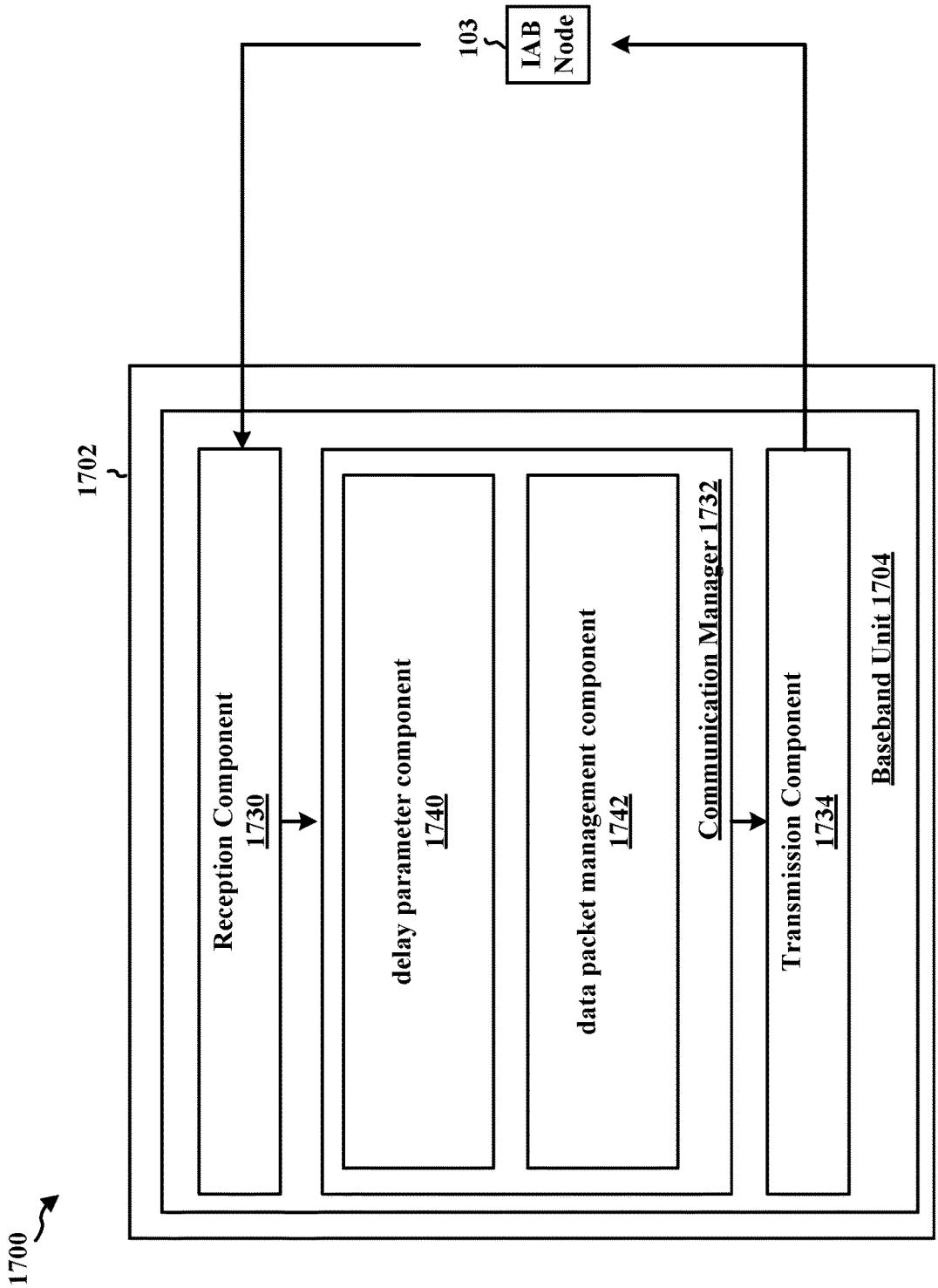
1700
1702
103
IAB Node
Reception Component 1730
delay parameter component 1740
data packet management component 1742
Communication Manager 1732
Transmission Component 1734
Baseband Unit 1704

FIG. 17

DELAY BOUNDS IN INTEGRATED ACCESS AND BACKHAUL NETWORK

CROSS REFERENCE TO RELATED APPLICATION(S)

This application claims the benefit of and priority to U.S. Provisional Application Ser. No. 63/072,764, entitled "DELAY BOUNDS IN INTEGRATED ACCESS AND BACKHAUL NETWORK" and filed on Aug. 31, 2020, which is expressly incorporated by reference herein in its entirety.

TECHNICAL FIELD

The present disclosure relates generally to communication systems, and more particularly, to wireless communication including an integrated access and backhaul (IAB) networks.

INTRODUCTION

Wireless communication systems are widely deployed to provide various telecommunication services such as telephony, video, data, messaging, and broadcasts. Typical wireless communication systems may employ multiple-access technologies capable of supporting communication with multiple users by sharing available system resources. Examples of such multiple-access technologies include code division multiple access (CDMA) systems, time division multiple access (TDMA) systems, frequency division multiple access (FDMA) systems, orthogonal frequency division multiple access (OFDMA) systems, single-carrier frequency division multiple access (SC-FDMA) systems, and time division synchronous code division multiple access (TD-SCDMA) systems.

These multiple access technologies have been adopted in various telecommunication standards to provide a common protocol that enables different wireless devices to communicate on a municipal, national, regional, and even global level. An example telecommunication standard is 5G New Radio (NR). 5G NR is part of a continuous mobile broadband evolution promulgated by Third Generation Partnership Project (3GPP) to meet new requirements associated with latency, reliability, security, scalability (e.g., with Internet of Things (IoT)), and other requirements. 5G NR includes services associated with enhanced mobile broadband (eMBB), massive machine type communications (mMTC), and ultra-reliable low latency communications (URLLC). Some aspects of 5G NR may be based on the 4G Long Term Evolution (LTE) standard. There exists a need for further improvements in 5G NR technology. These improvements may also be applicable to other multi-access technologies and the telecommunication standards that employ these technologies.

BRIEF SUMMARY

The following presents a simplified summary of one or more aspects in order to provide a basic understanding of such aspects. This summary is not an extensive overview of all contemplated aspects and is intended to neither identify key or critical elements of all aspects nor delineate the scope of any or all aspects. Its sole purpose is to present some concepts of one or more aspects in a simplified form as a prelude to the more detailed description that is presented later.

In an aspect of the disclosure, a method, a computer-readable medium, and an apparatus are provided for wireless communication at an IAB node. The IAB node apparatus may receive one or more delay parameters from an IAB donor and determine an access packet delay budget (PDB) over an air link between the IAB node and a child node or a user equipment (UE) based in part on the one or more delay parameters received from the IAB donor.

In another aspect of the disclosure, a method, a computer-readable medium, and an apparatus are provided for wireless communication for a central unit (CU) of an IAB network. The apparatus may indicate one or more delay parameters to an IAB node for determination of an access PDB over an air link between the IAB node and a child node or a UE associated with a data packet and send the packet for transmission to the child node via the IAB node, the packet having the access PDB indicated based on the one or more delay parameters.

To the accomplishment of the foregoing and related ends, the one or more aspects include the features hereinafter fully described and particularly pointed out in the claims. The following description and the annexed drawings set forth in detail certain illustrative features of the one or more aspects. These features are indicative, however, of but a few of the various ways in which the principles of various aspects may be employed, and this description is intended to include all such aspects and their equivalents.

BRIEF DESCRIPTION OF THE DRAWINGS

FIG. **1** is a diagram illustrating an example of a wireless communications system and an access network.

FIG. **2**A is a diagram illustrating an example of a first frame, in accordance with various aspects of the present disclosure.

FIG. **2**B is a diagram illustrating an example of DL channels within a subframe, in accordance with various aspects of the present disclosure.

FIG. **2**C is a diagram illustrating an example of a second frame, in accordance with various aspects of the present disclosure.

FIG. **2**D is a diagram illustrating an example of UL channels within a subframe, in accordance with various aspects of the present disclosure.

FIG. **3** is a diagram illustrating an example of a base station and user equipment (UE) in an access network.

FIG. **4** illustrates an example IAB network.

FIG. **5** illustrates example aspects of an IAB network including a distributed unit (DU) function and a mobile termination (MT) function of IAB noes in the IAB network.

FIG. **6** illustrates an L2 structure of an IAB network.

FIG. **7** illustrates an example architecture of an IAB donor.

FIG. **8** illustrates a stack architecture of an IAB network.

FIG. **9** illustrates example aspects of a PDB for an access network.

FIG. **10** illustrates example aspects of a PDB for an IAB network.

FIG. **11** illustrates an example of an IAB network with multiple intermediate IAB nodes.

FIG. **12** illustrates an example of an IAB network.

FIG. **13** is a call-flow chart of a method of wireless communication.

FIG. **14** is a flowchart of a method of wireless communication.

FIG. **15** is a diagram illustrating an example of a hardware implementation for an example apparatus.

FIG. **16** is a flowchart of a method of wireless communication.

FIG. **17** is a diagram illustrating an example of a hardware implementation for an example apparatus.

DETAILED DESCRIPTION

The detailed description set forth below in connection with the appended drawings is intended as a description of various configurations and is not intended to represent the only configurations in which the concepts described herein may be practiced. The detailed description includes specific details for the purpose of providing a thorough understanding of various concepts. However, it will be apparent to those skilled in the art that these concepts may be practiced without these specific details. In some instances, well-known structures and components are shown in block diagram form in order to avoid obscuring such concepts.

Several aspects of telecommunication systems will now be presented with reference to various apparatus and methods. These apparatus and methods will be described in the following detailed description and illustrated in the accompanying drawings by various blocks, components, circuits, processes, algorithms, etc. (collectively referred to as "elements"). These elements may be implemented using electronic hardware, computer software, or any combination thereof. Whether such elements are implemented as hardware or software depends upon the particular application and design constraints imposed on the overall system.

By way of example, an element, or any portion of an element, or any combination of elements may be implemented as a "processing system" that includes one or more processors. Examples of processors include microprocessors, microcontrollers, graphics processing units (GPUs), central processing units (CPUs), application processors, digital signal processors (DSPs), reduced instruction set computing (RISC) processors, systems on a chip (SoC), baseband processors, field-programmable gate arrays (FPGAs), programmable logic devices (PLDs), state machines, gated logic, discrete hardware circuits, and other suitable hardware configured to perform the various functionality described throughout this disclosure. One or more processors in the processing system may execute software. Software shall be construed broadly to mean instructions, instruction sets, code, code segments, program code, programs, subprograms, software components, applications, software applications, software packages, routines, subroutines, objects, executables, threads of execution, procedures, functions, etc., whether referred to as software, firmware, middleware, microcode, hardware description language, or otherwise.

Accordingly, in one or more example embodiments, the functions described may be implemented in hardware, software, or any combination thereof. If implemented in software, the functions may be stored on or encoded as one or more instructions or code on a computer-readable medium. Computer-readable media includes computer storage media. Storage media may be any available media that can be accessed by a computer. By way of example, and not limitation, such computer-readable media can include a random-access memory (RAM), a read-only memory (ROM), an electrically erasable programmable ROM (EEPROM), optical disk storage, magnetic disk storage, other magnetic storage devices, combinations of the types of computer-readable media, or any other medium that can be used to store computer-executable code in the form of instructions or data structures that can be accessed by a computer.

While aspects and implementations are described in this application by illustration to some examples, those skilled in the art will understand that additional implementations and use cases may come about in many different arrangements and scenarios. Innovations described herein may be implemented across many differing platform types, devices, systems, shapes, sizes, and packaging arrangements. For example, implementations and/or uses may come about via integrated chip implementations and other non-module-component based devices (e.g., end-user devices, vehicles, communication devices, computing devices, industrial equipment, retail/purchasing devices, medical devices, artificial intelligence (AI)-enabled devices, etc.). While some examples may or may not be specifically directed to use cases or applications, a wide assortment of applicability of described innovations may occur. Implementations may range a spectrum from chip-level or modular components to non-modular, non-chip-level implementations and further to aggregate, distributed, or original equipment manufacturer (OEM) devices or systems incorporating one or more aspects of the described innovations. In some practical settings, devices incorporating described aspects and features may also include additional components and features for the implementation and practice of claimed and described aspects. For example, transmission and reception of wireless signals necessarily include a number of components for analog and digital purposes (e.g., hardware components including antenna, RF-chains, power amplifiers, modulators, buffer, processor(s), interleaver, adders/summers, etc.). It is intended that innovations described herein may be practiced in a wide variety of devices, chip-level components, systems, distributed arrangements, aggregated or disaggregated components, end-user devices, etc. of varying sizes, shapes, and constitution.

FIG. **1** is a diagram illustrating an example of a wireless communications system and an access network **100**. The wireless communications system (also referred to as a wireless wide area network (WWAN)) includes base stations **102**, UEs **104**, an Evolved Packet Core (EPC) **160**, and another core network **190** (e.g., a 5G Core (5GC)). The base stations **102** may include macrocells (high power cellular base station) and/or small cells (e.g., a low power cellular base station). The macrocells include base stations. The small cells include femtocells, picocells, and microcells.

The base stations **102** configured for 4G LTE (collectively referred to as Evolved Universal Mobile Telecommunications System (UMTS) Terrestrial Radio Access Network (E-UTRAN)) may interface with the EPC **160** through first backhaul links **132** (e.g., S1 interface). The base stations **102** configured for 5G NR (collectively referred to as Next Generation RAN (NG-RAN)) may interface with core network **190** through second backhaul links **184**. In addition to other functions, the base stations **102** may perform one or more of the following functions: transfer of user data, radio channel ciphering and deciphering, integrity protection, header compression, mobility control functions (e.g., handover, dual connectivity), inter-cell interference coordination, connection setup and release, load balancing, distribution for non-access stratum (NAS) messages, NAS node selection, synchronization, radio access network (RAN) sharing, multimedia broadcast multicast service (MBMS), subscriber and equipment trace, RAN information management (RIM), paging, positioning, and delivery of warning messages. The base stations **102** may communicate directly

or indirectly (e.g., through the EPC **160** or core network **190**) with each other over third backhaul links **134** (e.g., X2 interface). The first backhaul links **132**, the second backhaul links **184**, and the third backhaul links **134** may be wired or wireless.

The base stations **102** may wirelessly communicate with the UEs **104**. Each of the base stations **102** may provide communication coverage for a respective geographic coverage area **110**. There may be overlapping geographic coverage areas **110**. For example, the small cell **102'** may have a coverage area **110'** that overlaps the coverage area **110** of one or more macro base stations **102**. A network that includes both small cell and macrocells may be known as a heterogeneous network. A heterogeneous network may also include Home Evolved Node Bs (eNBs) (HeNBs), which may provide service to a restricted group known as a closed subscriber group (CSG). The communication links **120** between the base stations **102** and the UEs **104** may include uplink (UL) (also referred to as reverse link) transmissions from a UE **104** to a base station **102** and/or downlink (DL) (also referred to as forward link) transmissions from a base station **102** to a UE **104**. The communication links **120** may use multiple-input and multiple-output (MIMO) antenna technology, including spatial multiplexing, beamforming, and/or transmit diversity. The communication links may be through one or more carriers. The base stations **102**/UEs **104** may use spectrum up to Y MHz (e.g., 5, 10, 15, 20, 100, 400, etc. MHz) bandwidth per carrier allocated in a carrier aggregation of up to a total of Yx MHz (x component carriers) used for transmission in each direction. The carriers may or may not be adjacent to each other. Allocation of carriers may be asymmetric with respect to DL and UL (e.g., more or fewer carriers may be allocated for DL than for UL). The component carriers may include a primary component carrier and one or more secondary component carriers. A primary component carrier may be referred to as a primary cell (PCell) and a secondary component carrier may be referred to as a secondary cell (SCell).

Certain UEs **104** may communicate with each other using device-to-device (D2D) communication link **158**. The D2D communication link **158** may use the DL/UL WWAN spectrum. The D2D communication link **158** may use one or more sidelink channels, such as a physical sidelink broadcast channel (PSBCH), a physical sidelink discovery channel (PSDCH), a physical sidelink shared channel (PSSCH), and a physical sidelink control channel (PSCCH). D2D communication may be through a variety of wireless D2D communications systems, such as WiMedia, Bluetooth, ZigBee, Wi-Fi based on the Institute of Electrical and Electronics Engineers (IEEE) 802.11 standard, LTE, or NR.

The wireless communications system may further include a Wi-Fi access point (AP) **150** in communication with Wi-Fi stations (STAs) **152** via communication links **154**, e.g., in a 5 GHz unlicensed frequency spectrum or the like. When communicating in an unlicensed frequency spectrum, the STAs **152**/AP **150** may perform a clear channel assessment (CCA) prior to communicating in order to determine whether the channel is available.

The small cell **102'** may operate in a licensed and/or an unlicensed frequency spectrum. When operating in an unlicensed frequency spectrum, the small cell **102'** may employ NR and use the same unlicensed frequency spectrum (e.g., 5 GHz, or the like) as used by the Wi-Fi AP **150**. The small cell **102'**, employing NR in an unlicensed frequency spectrum, may boost coverage to and/or increase the capacity of the access network.

The electromagnetic spectrum is often subdivided, based on frequency/wavelength, into various classes, bands, channels, etc. In 5G NR, two initial operating bands have been identified as frequency range designations FR1 (410 MHz-7.125 GHz) and FR2 (24.25 GHz-52.6 GHz). Although a portion of FR1 is greater than 6 GHz, FR1 is often referred to (interchangeably) as a "sub-6 GHz" band in various documents and articles. A similar nomenclature issue sometimes occurs with regard to FR2, which is often referred to (interchangeably) as a "millimeter wave" band in documents and articles, despite being different from the extremely high frequency (EHF) band (30 GHz-300 GHz) which is identified by the International Telecommunications Union (ITU) as a "millimeter wave" band.

The frequencies between FR1 and FR2 are often referred to as mid-band frequencies. Recent 5G NR studies have identified an operating band for these mid-band frequencies as frequency range designation FR3 (7.125 GHz-24.25 GHz). Frequency bands falling within FR3 may inherit FR1 characteristics and/or FR2 characteristics, and thus may effectively extend features of FR1 and/or FR2 into mid-band frequencies. In addition, higher frequency bands are currently being explored to extend 5G NR operation beyond 52.6 GHz. For example, three higher operating bands have been identified as frequency range designations FR4a or FR4-1 (52.6 GHz-71 GHz), FR4 (52.6 GHz-114.25 GHz), and FR5 (114.25 GHz-300 GHz). Each of these higher frequency bands falls within the EHF band.

With the above aspects in mind, unless specifically stated otherwise, it should be understood that the term "sub-6 GHz" or the like if used herein may broadly represent frequencies that may be less than 6 GHz, may be within FR1, or may include mid-band frequencies. Further, unless specifically stated otherwise, it should be understood that the term "millimeter wave" or the like if used herein may broadly represent frequencies that may include mid-band frequencies, may be within FR2, FR4, FR4-a or FR4-1, and/or FR5, or may be within the EHF band.

A base station **102**, whether a small cell **102'** or a large cell (e.g., macro base station), may include and/or be referred to as an eNB, gNodeB (gNB), or another type of base station. Some base stations, such as gNB **180** may operate in a traditional sub 6 GHz spectrum, in millimeter wave frequencies, and/or near millimeter wave frequencies in communication with the UE **104**. When the gNB **180** operates in millimeter wave or near millimeter wave frequencies, the gNB **180** may be referred to as a millimeter wave base station. The millimeter wave base station **180** may utilize beamforming **182** with the UE **104** to compensate for the path loss and short range. The base station **180** and the UE **104** may each include a plurality of antennas, such as antenna elements, antenna panels, and/or antenna arrays to facilitate the beamforming.

The base station **180** may transmit a beamformed signal to the UE **104** in one or more transmit directions **182'**. The UE **104** may receive the beamformed signal from the base station **180** in one or more receive directions **182"**. The UE **104** may also transmit a beamformed signal to the base station **180** in one or more transmit directions. The base station **180** may receive the beamformed signal from the UE **104** in one or more receive directions. The base station **180**/UE **104** may perform beam training to determine the best receive and transmit directions for each of the base station **180**/UE **104**. The transmit and receive directions for the base station **180** may or may not be the same. The transmit and receive directions for the UE **104** may or may not be the same.

The EPC **160** may include a Mobility Management Entity (MME) **162**, other MMEs **164**, a Serving Gateway **166**, a Multimedia Broadcast Multicast Service (MBMS) Gateway **168**, a Broadcast Multicast Service Center (BM-SC) **170**, and a Packet Data Network (PDN) Gateway **172**. The MME **162** may be in communication with a Home Subscriber Server (HSS) **174**. The MME **162** is the control node that processes the signaling between the UEs **104** and the EPC **160**. Generally, the MME **162** provides bearer and connection management. All user Internet protocol (IP) packets are transferred through the Serving Gateway **166**, which itself is connected to the PDN Gateway **172**. The PDN Gateway **172** provides UE IP address allocation as well as other functions. The PDN Gateway **172** and the BM-SC **170** are connected to the IP Services **176**. The IP Services **176** may include the Internet, an intranet, an IP Multimedia Subsystem (IMS), a PS Streaming Service, and/or other IP services. The BM-SC **170** may provide functions for MBMS user service provisioning and delivery. The BM-SC **170** may serve as an entry point for content provider MBMS transmission, may be used to authorize and initiate MBMS Bearer Services within a public land mobile network (PLMN), and may be used to schedule MBMS transmissions. The MBMS Gateway **168** may be used to distribute MBMS traffic to the base stations **102** belonging to a Multicast Broadcast Single Frequency Network (MBSFN) area broadcasting a particular service, and may be responsible for session management (start/stop) and for collecting eMBMS related charging information.

The core network **190** may include an Access and Mobility Management Function (AMF) **192**, other AMFs **193**, a Session Management Function (SMF) **194**, and a User Plane Function (UPF) **195**. The AMF **192** may be in communication with a Unified Data Management (UDM) **196**. The AMF **192** is the control node that processes the signaling between the UEs **104** and the core network **190**. Generally, the AMF **192** provides QoS flow and session management. All user Internet protocol (IP) packets are transferred through the UPF **195**. The UPF **195** provides UE IP address allocation as well as other functions. The UPF **195** is connected to the IP Services **197**. The IP Services **197** may include the Internet, an intranet, an IP Multimedia Subsystem (IMS), a Packet Switch (PS) Streaming (PSS) Service, and/or other IP services.

The base station may include and/or be referred to as a gNB, Node B, eNB, an access point, a base transceiver station, a radio base station, a radio transceiver, a transceiver function, a basic service set (BSS), an extended service set (ESS), a transmit reception point (TRP), or some other suitable terminology. The base station **102** provides an access point to the EPC **160** or core network **190** for a UE **104**. Examples of UEs **104** include a cellular phone, a smart phone, a session initiation protocol (SIP) phone, a laptop, a personal digital assistant (PDA), a satellite radio, a global positioning system, a multimedia device, a video device, a digital audio player (e.g., MP3 player), a camera, a game console, a tablet, a smart device, a wearable device, a vehicle, an electric meter, a gas pump, a large or small kitchen appliance, a healthcare device, an implant, a sensor/actuator, a display, or any other similar functioning device. Some of the UEs **104** may be referred to as IoT devices (e.g., parking meter, gas pump, toaster, vehicles, heart monitor, etc.). The UE **104** may also be referred to as a station, a mobile station, a subscriber station, a mobile unit, a subscriber unit, a wireless unit, a remote unit, a mobile device, a wireless device, a wireless communications device, a remote device, a mobile subscriber station, an access terminal, a mobile terminal, a wireless terminal, a remote terminal, a handset, a user agent, a mobile client, a client, or some other suitable terminology. In some scenarios, the term UE may also apply to one or more companion devices such as in a device constellation arrangement. One or more of these devices may collectively access the network and/or individually access the network.

Referring again to FIG. **1**, in certain aspects, the IAB node **103** may include a packet delay budget component **198** configured to receive at least one delay parameter from a CU of an IAB donor of the IAB network, and determine an access PDB over an air link between the IAB node and a child node based on at least in part on the at least one delay parameter received from the CU of the IAB donor. A central unit (CU) **107** of an IAB network may include a delay parameter component **199** configured to indicate one or more delay parameters to an IAB node for determination of an access PDB over an air link between the IAB node and a child node or a UE associated with a data packet and send the packet for transmission to the child node via the IAB node, the packet having the access PDB indicated based on the one or more delay parameters. The CU may send the packet for transmission to a UE **104** via one or more IAB nodes **103** including the IAB node. Although the following description may be focused on 5G NR, the concepts described herein may be applicable to other similar areas, such as LTE, LTE-A, CDMA, GSM, and other wireless technologies.

FIG. **2**A is a diagram **200** illustrating an example of a first subframe within a 5G NR frame structure. FIG. **2**B is a diagram **230** illustrating an example of DL channels within a 5G NR subframe. FIG. **2**C is a diagram **250** illustrating an example of a second subframe within a 5G NR frame structure. FIG. **2**D is a diagram **280** illustrating an example of UL channels within a 5G NR subframe. The 5G NR frame structure may be frequency division duplexed (FDD) in which for a particular set of subcarriers (carrier system bandwidth), subframes within the set of subcarriers are dedicated for either DL or UL, or may be time division duplexed (TDD) in which for a particular set of subcarriers (carrier system bandwidth), subframes within the set of subcarriers are dedicated for both DL and UL. In the examples provided by FIGS. **2**A, **2**C, the 5G NR frame structure is assumed to be TDD, with subframe 4 being configured with slot format 28 (with mostly DL), where D is DL, U is UL, and F is flexible for use between DL/UL, and subframe 3 being configured with slot format 1 (with all UL). While subframes 3, 4 are shown with slot formats 1, 28, respectively, any particular subframe may be configured with any of the various available slot formats 0-61. Slot formats 0, 1 are all DL, UL, respectively. Other slot formats 2-61 include a mix of DL, UL, and flexible symbols. UEs are configured with the slot format (dynamically through DL control information (DCI), or semi-statically/statically through radio resource control (RRC) signaling) through a received slot format indicator (SFI). Note that the description infra applies also to a 5G NR frame structure that is TDD.

FIGS. **2**A-**2**D illustrate a frame structure, and the aspects of the present disclosure may be applicable to other wireless communication technologies, which may have a different frame structure and/or different channels. A frame (10 ms) may be divided into 10 equally sized subframes (1 ms). Each subframe may include one or more time slots. Subframes may also include mini-slots, which may include 7, 4, or 2 symbols. Each slot may include 14 or 12 symbols, depending on whether the cyclic prefix (CP) is normal or extended. For normal CP, each slot may include 14 symbols, and for

extended CP, each slot may include 12 symbols. The symbols on DL may be CP orthogonal frequency division multiplexing (OFDM) (CP-OFDM) symbols. The symbols on UL may be CP-OFDM symbols (for high throughput scenarios) or discrete Fourier transform (DFT) spread OFDM (DFT-s-OFDM) symbols (also referred to as single carrier frequency-division multiple access (SC-FDMA) symbols) (for power limited scenarios; limited to a single stream transmission). The number of slots within a subframe is based on the CP and the numerology. The numerology defines the subcarrier spacing (SCS) and, effectively, the symbol length/duration, which is equal to 1/SCS.

μ	SCS $\Delta f = 2^{\mu} \cdot 15$[KHz]	Cyclic prefix
0	15	Normal
1	30	Normal
2	60	Normal, Extended
3	120	Normal
4	240	Normal

For normal CP (14 symbols/slot), different numerologies μ 0 to 4 allow for 1, 2, 4, 8, and 16 slots, respectively, per subframe. For extended CP, the numerology 2 allows for 4 slots per subframe. Accordingly, for normal CP and numerology μ, there are 14 symbols/slot and 2^{μ} slots/subframe. The subcarrier spacing may be equal to 2^{μ}*15 kHz, where y is the numerology 0 to 4. As such, the numerology μ=0 has a subcarrier spacing of 15 kHz and the numerology μ=4 has a subcarrier spacing of 240 kHz. The symbol length/duration is inversely related to the subcarrier spacing. FIGS. **2**A-**2**D provide an example of normal CP with 14 symbols per slot and numerology μ=2 with 4 slots per subframe. The slot duration is 0.25 ms, the subcarrier spacing is 60 kHz, and the symbol duration is approximately 16.67 s. Within a set of frames, there may be one or more different bandwidth parts (BWPs) (see FIG. **2**B) that are frequency division multiplexed. Each BWP may have a particular numerology and CP (normal or extended).

A resource grid may be used to represent the frame structure. Each time slot includes a resource block (RB) (also referred to as physical RBs (PRBs)) that extends 12 consecutive subcarriers. The resource grid is divided into multiple resource elements (REs). The number of bits carried by each RE depends on the modulation scheme.

As illustrated in FIG. **2**A, some of the REs carry reference (pilot) signals (RS) for the UE. The RS may include demodulation RS (DM-RS) (indicated as R for one particular configuration, but other DM-RS configurations are possible) and channel state information reference signals (CSI-RS) for channel estimation at the UE. The RS may also include beam measurement RS (BRS), beam refinement RS (BRRS), and phase tracking RS (PT-RS).

FIG. **2**B illustrates an example of various DL channels within a subframe of a frame. The physical downlink control channel (PDCCH) carries DCI within one or more control channel elements (CCEs) (e.g., 1, 2, 4, 8, or 16 CCEs), each CCE including six RE groups (REGs), each REG including 12 consecutive REs in an OFDM symbol of an RB. A PDCCH within one BWP may be referred to as a control resource set (CORESET). A UE is configured to monitor PDCCH candidates in a PDCCH search space (e.g., common search space, UE-specific search space) during PDCCH monitoring occasions on the CORESET, where the PDCCH candidates have different DCI formats and different aggregation levels. Additional BWPs may be located at greater and/or lower frequencies across the channel bandwidth. A primary synchronization signal (PSS) may be within symbol 2 of particular subframes of a frame. The PSS is used by a UE **104** to determine subframe/symbol timing and a physical layer identity. A secondary synchronization signal (SSS) may be within symbol 4 of particular subframes of a frame. The SSS is used by a UE to determine a physical layer cell identity group number and radio frame timing. Based on the physical layer identity and the physical layer cell identity group number, the UE can determine a physical cell identifier (PCI). Based on the PCI, the UE can determine the locations of the DM-RS. The physical broadcast channel (PBCH), which carries a master information block (MIB), may be logically grouped with the PSS and SSS to form a synchronization signal (SS)/PBCH block (also referred to as SS block (SSB)). The MIB provides a number of RBs in the system bandwidth and a system frame number (SFN). The physical downlink shared channel (PDSCH) carries user data, broadcast system information not transmitted through the PBCH such as system information blocks (SIBs), and paging messages.

As illustrated in FIG. **2**C, some of the REs carry DM-RS (indicated as R for one particular configuration, but other DM-RS configurations are possible) for channel estimation at the base station. The UE may transmit DM-RS for the physical uplink control channel (PUCCH) and DM-RS for the physical uplink shared channel (PUSCH). The PUSCH DM-RS may be transmitted in the first one or two symbols of the PUSCH. The PUCCH DM-RS may be transmitted in different configurations depending on whether short or long PUCCHs are transmitted and depending on the particular PUCCH format used. The UE may transmit sounding reference signals (SRS). The SRS may be transmitted in the last symbol of a subframe. The SRS may have a comb structure, and a UE may transmit SRS on one of the combs. The SRS may be used by a base station for channel quality estimation to enable frequency-dependent scheduling on the UL.

FIG. **2**D illustrates an example of various UL channels within a subframe of a frame. The PUCCH may be located as indicated in one configuration. The PUCCH carries uplink control information (UCI), such as scheduling requests, a channel quality indicator (CQI), a precoding matrix indicator (PMI), a rank indicator (RI), and hybrid automatic repeat request (HARQ) acknowledgment (ACK) (HARQ-ACK) feedback (i.e., one or more HARQ ACK bits indicating one or more ACK and/or negative ACK (NACK)). The PUSCH carries data, and may additionally be used to carry a buffer status report (BSR), a power headroom report (PHR), and/or UCI.

FIG. **3** is a block diagram of a wireless device **310** in communication with a wireless device **350** in an access network. In one aspect, the device **310** may be an IAB donor and the device **350** may be an IAB node. In another aspect, the device **310** may be a parent IAB node and the device **350** may be a child IAB node. In another aspect, the device **310** may be a parent IAB node and the device **350** may be a UE. In the DL, IP packets from the EPC **160** may be provided to a controller/processor **375**. The controller/processor **375** implements layer 3 and layer 2 functionality. Layer 3 includes a radio resource control (RRC) layer, and layer 2 includes a service data adaptation protocol (SDAP) layer, a packet data convergence protocol (PDCP) layer, a radio link control (RLC) layer, and a medium access control (MAC) layer. The controller/processor **375** provides RRC layer functionality associated with broadcasting of system information (e.g., MIB, SIBs), RRC connection control (e.g., RRC connection paging, RRC connection establishment,

RRC connection modification, and RRC connection release), inter radio access technology (RAT) mobility, and measurement configuration for UE measurement reporting; PDCP layer functionality associated with header compression/decompression, security (ciphering, deciphering, integrity protection, integrity verification), and handover support functions; RLC layer functionality associated with the transfer of upper layer packet data units (PDUs), error correction through ARQ, concatenation, segmentation, and reassembly of RLC service data units (SDUs), re-segmentation of RLC data PDUs, and reordering of RLC data PDUs; and MAC layer functionality associated with mapping between logical channels and transport channels, multiplexing of MAC SDUs onto transport blocks (TBs), demultiplexing of MAC SDUs from TBs, scheduling information reporting, error correction through HARQ, priority handling, and logical channel prioritization.

The transmit (TX) processor **316** and the receive (RX) processor **370** implement layer 1 functionality associated with various signal processing functions. Layer 1, which includes a physical (PHY) layer, may include error detection on the transport channels, forward error correction (FEC) coding/decoding of the transport channels, interleaving, rate matching, mapping onto physical channels, modulation/demodulation of physical channels, and MIMO antenna processing. The TX processor **316** handles mapping to signal constellations based on various modulation schemes (e.g., binary phase-shift keying (BPSK), quadrature phase-shift keying (QPSK), M-phase-shift keying (M-PSK), M-quadrature amplitude modulation (M-QAM)). The coded and modulated symbols may then be split into parallel streams. Each stream may then be mapped to an OFDM subcarrier, multiplexed with a reference signal (e.g., pilot) in the time and/or frequency domain, and then combined together using an Inverse Fast Fourier Transform (IFFT) to produce a physical channel carrying a time domain OFDM symbol stream. The OFDM stream is spatially precoded to produce multiple spatial streams. Channel estimates from a channel estimator **374** may be used to determine the coding and modulation scheme, as well as for spatial processing. The channel estimate may be derived from a reference signal and/or channel condition feedback transmitted by the device **350**. Each spatial stream may then be provided to a different antenna **320** via a separate transmitter **318** TX. Each transmitter **318** TX may modulate a radio frequency (RF) carrier with a respective spatial stream for transmission.

At the device **350**, each receiver **354** RX receives a signal through its respective antenna **352**. Each receiver **354** RX recovers information modulated onto an RF carrier and provides the information to the receive (RX) processor **356**. The TX processor **368** and the RX processor **356** implement layer 1 functionality associated with various signal processing functions. The RX processor **356** may perform spatial processing on the information to recover any spatial streams destined for the device **350**. If multiple spatial streams are destined for the device **350**, they may be combined by the RX processor **356** into a single OFDM symbol stream. The RX processor **356** then converts the OFDM symbol stream from the time-domain to the frequency domain using a Fast Fourier Transform (FFT). The frequency domain signal includes a separate OFDM symbol stream for each subcarrier of the OFDM signal. The symbols on each subcarrier, and the reference signal, are recovered and demodulated by determining the most likely signal constellation points transmitted by the device **310**. These soft decisions may be based on channel estimates computed by the channel estimator **358**. The soft decisions are then decoded and deinterleaved to recover the data and control signals that were originally transmitted by the device **310** on the physical channel. The data and control signals are then provided to the controller/processor **359**, which implements layer 3 and layer 2 functionality.

The controller/processor **359** can be associated with a memory **360** that stores program codes and data. The memory **360** may be referred to as a computer-readable medium. In the UL, the controller/processor **359** provides demultiplexing between transport and logical channels, packet reassembly, deciphering, header decompression, and control signal processing to recover IP packets from the EPC **160**. The controller/processor **359** is also responsible for error detection using an ACK and/or NACK protocol to support HARQ operations.

Similar to the functionality described in connection with the DL transmission by the device **310**, the controller/processor **359** provides RRC layer functionality associated with system information (e.g., MIB, SIBs) acquisition, RRC connections, and measurement reporting; PDCP layer functionality associated with header compression/decompression, and security (ciphering, deciphering, integrity protection, integrity verification); RLC layer functionality associated with the transfer of upper layer PDUs, error correction through ARQ, concatenation, segmentation, and reassembly of RLC SDUs, re-segmentation of RLC data PDUs, and reordering of RLC data PDUs; and MAC layer functionality associated with mapping between logical channels and transport channels, multiplexing of MAC SDUs onto TBs, demultiplexing of MAC SDUs from TBs, scheduling information reporting, error correction through HARQ, priority handling, and logical channel prioritization.

Channel estimates derived by a channel estimator **358** from a reference signal or feedback transmitted by the device **310** may be used by the TX processor **368** to select the appropriate coding and modulation schemes, and to facilitate spatial processing. The spatial streams generated by the TX processor **368** may be provided to different antenna **352** via separate transmitters **354**TX. Each transmitter **354**TX may modulate an RF carrier with a respective spatial stream for transmission.

The UL transmission is processed at the device **310** in a manner similar to that described in connection with the receiver function at the device **350**. Each receiver **318**RX receives a signal through its respective antenna **320**. Each receiver **318**RX recovers information modulated onto an RF carrier and provides the information to a RX processor **370**.

The controller/processor **375** can be associated with a memory **376** that stores program codes and data. The memory **376** may be referred to as a computer-readable medium. In the UL, the controller/processor **375** provides demultiplexing between transport and logical channels, packet reassembly, deciphering, header decompression, control signal processing to recover IP packets from the device **350**. IP packets from the controller/processor **375** may be provided to the EPC **160**. The controller/processor **375** is also responsible for error detection using an ACK and/or NACK protocol to support HARQ operations.

At least one of the TX processor **368**, the RX processor **356**, and the controller/processor **359** may be configured to perform aspects in connection with the packet delay budget component **198** of FIG. **1**. At least one of the TX processor **316**, the RX processor **370**, and the controller/processor **375** may be configured to perform aspects in connection with the delay parameter component **199** of FIG. **1**.

FIG. **4** is a diagram illustrating an IAB network **400**. The IAB network **400** may include an anchor node (that may be

referred to herein as an "IAB donor") **410** and access nodes (that may be referred to herein as "IAB nodes") **420**. The IAB donor **410** may be a base station, such as a gNB or eNB (such as base station **102** or **180** in FIG. **1**), and may perform functions to control the IAB network **400**. The IAB nodes **420** may include L2 relay nodes, etc. Together, the IAB donor **410** and the IAB nodes **420** may share resources to provide an access network and a backhaul network to core network **490**. For example, resources may be shared between access links and backhaul links in the IAB network.

UEs **430** may interface with the IAB nodes **420** or the IAB donor **410** through access links **470**. The IAB nodes **420** may communicate with each other and with the IAB donor **410** through backhaul links **460**. The IAB donor **410** may be connected to the core network **490** via a wireline backhaul link **450**. UEs **430** may communicate with the core network by relaying messages through their respective access link **470** to the IAB network **400**, which then may relay the message through backhaul links **460** to the IAB donor **410** to communicate to the core network through the wireline backhaul link **450**. Similarly, the core network may communicate with a UE **430** by sending a message to the IAB donor **410** through the wireline backhaul link **450**. The IAB donor **410** may send the message through the IAB network **400** via backhaul links **460** to the IAB node **420** connected to the UE **430**, and the IAB node **420** may send the message to the UE **430** via the access link **470**.

Each IAB node, e.g., including IAB donor **410** and each IAB node **420**, may use a physical cell identifier (PCI) value. The PCI value may serve as an identifier for that IAB donor **410** or IAB node **420**. The PCI value may be used to determine a scrambling sequence that is applied to physical signals and/or channels that are transmitted by a particular IAB node. For example, a PSS and/or the SSS transmitted by the respective IAB donor **410** or IAB node **420** may be scrambled using a scrambling sequence that is based on the PCI used by the respective IAB node. A network may have a limited number of available PCI values. For instance, 5G NR systems may support a number of PCI values, e.g., 1008 PCI values. Accordingly, a given PCI value may be reused in the same network.

FIG. **5** is a diagram illustrating an IAB network **500** and components thereof. The IAB network **500** may include an IAB donor **510** and IAB nodes **520***a* and **520***b*. The IAB nodes, as well as the IAB donor, may provide wireless access links to UEs **530**.

The IAB donor **510** may be considered a root node of the tree structure of the IAB network **500**. The IAB donor **510** may be connected to the core network **590** via a wired connection **591**. The wired connection may include, e.g., a wireline fiber. The IAB donor **510** may provide a connection to one or more IAB nodes **520***a*. The IAB nodes **520***a* may each be referred to as a child node of the IAB donor **510**. The IAB donor **510** may also provide a connection to one or more UE **530***a*, which may be referred to as a child UE of IAB donor **510**. The IAB donor **510** may be connected to its child IAB nodes **520***a* via backhaul links **560** and may be connected to the child UEs **530***a* via access links **570**. The IAB nodes **520***a* that are children nodes of IAB donor **510** may also have IAB node(s) **520***b* and/or UE(s) **530***b* as children. For example, IAB nodes **520***b* may further connect to child nodes and/or child UEs. FIG. **5** illustrates IAB nodes **520***b* providing an access link to UEs **530***c*, respectively.

The IAB donor **510** may include a central unit (CU) and a distributed unit (DU). The central unit CU may provide control for the IAB nodes **520***a*, **520***b* in the IAB network **500**. For example, the CU may be responsible for the configuration of the IAB network **500**. The CU may perform RRC/PDCP layer functions. The DU may perform scheduling. For example, the DU may schedule resources for communication by the child IAB nodes **520***a* and/or UEs **530***a* of the IAB donor **510**.

The IAB nodes **520***a*, **520***b* may include a mobile termination (MT) and a DU. The MT of IAB node **520***a* may operate as a scheduled node, scheduled in a similar manner to a UE **530***a* by the DU of the parent node, e.g., IAB donor **510**. The MT of IAB node **520***b* may operate as a scheduled node of parent node **520***a*. The DU of the IAB node **520***a* may schedule the child IAB nodes **520***b* and UEs **530***b* of the IAB node **520***a*. An IAB node may provide a connection to an IAB node and, in turn, provide a connection for another IAB node. The pattern of a parent IAB node including a DU that schedules a child IAB node/child UE may continue to have more connections than the example illustrated in FIG. **5**.

FIG. **6** illustrates an example L2 structure **600** for an IAB network, such as the example IAB network **500** in FIG. **5**. The IAB donor CU **602** may have an IP connection to an IAB donor DU **604**. The donor DU **604** may provide multiple RLC backhaul channels to one or more parent IAB nodes **606**. The backhaul RLC channels between the DU and MT may carry backhaul adaptation protocol (BAP) for backhauling of access traffic. The IAB node **606** may operate as a parent node to one or child nodes (e.g., IAB node **616**) or UEs **610**. The DU **608** of the IAB node **606** may provide an access RLC channel to one or more UEs **610** and/or MT **612** of an IAB node **616**. The access RLC channels between the DU **608** and the UE **610** may carry PDCP for RRC or DRB. The access RLC channels between the DU **608** and the MT **612** may carry PDCP for RRC or DRB. The DU **608** of the IAB node **606** may provide backhaul RLC channels to the MT **612** of the IAB node **616**. An access RLC channel protocol stack **630** is illustrated that shows the RLC layer with a PDCP layer, a MAC layer, and a PHY layer for an access link. A backhaul RLC channel protocol stack **640** is illustrated that shows the RLC layer with a BAP layer, a MAC layer, and a PHY layer for providing the backhaul links. Similar to the IAB node **606**, the IAB node **616** may operate as a parent node to one or child nodes (e.g., IAB node **618**) or UEs **610**. The IAB node **616** may include a DU **614** that may provide an access RLC channel to one or more UEs **620** and/or MT **612** of an IAB node **618** and/or provide backhaul RLC channels to the MT **612** of the IAB node **618**. The pattern may continue, and the IAB node **618** may serve additional child IAB nodes and/or UEs. The IAB node **606** may be referred to as an "intermediate node" or an "intermediate IAB node" between the IAB donor DU **604** and the IAB node **616** that serves UE **602**. The IAB node **616** may be referred to as the "serving IAB node" or "serving node" for the UE **620**.

FIG. **7** illustrates an overall architecture of an IAB donor **700** (e.g., IAB donor **510**). Here, the IAB donor **700** may be a gNB of 5G/NR (e.g., gNB **180**). The IAB donor **700** may include an IAB donor-CU **702** and one or more IAB donor-DUs **708**. The IAB donor-CU **702** may include an IAB donor-CU-control plane (CP) (IAB donor-CU-CP) **704** and one or more IAB donor-CU-user planes (UPs) (IAB donor-CU-UP) **706**. The IAB donor-CU-CP **704** may provide configuration controlling messages for all of the one or more IAB donor-DUs **708**. The IAB donor-CU-UP **706** may transmit data packets from and to the IAB network (e.g., IAB network **500**) through the IAB donor-DU **708**. The IAB donor-CU-CP **704** and the one or more IAB donor-CU-UPs **706** may communicate with each other through an E1

interface. The IAB donor-CU-CP **704** and the one or more IAB donor-DUs **708** may communicate with each other through an F1 control plane interface (F1-C). The IAB donor-CU-UP **706** and the one or more IAB donor-DUs **708** may communicate with each other through an F1 user plane interface (F1-U).

FIG. **8** illustrates a stack architecture of the IAB network from a UE **802** (e.g., one or more UEs **530***a*/**530***b*) to an IAB donor **811** (e.g., IAB donor **510**/**700**). The stack architecture of the IAB network illustrates a stack architecture of the user plane **800** of the IAB network and a stack architecture of the control plane **820** of the IAB network. The stack architecture of the user plane **800** of the IAB network may include the stack structures of the user plane of the UE **802**, an IAB node **2 804**, an IAB node **1 806**, an IAB donor-DU **808**, an IAB donor_CU-UP **810**, and a user plane function (UPF) **812** of the core network. The stack architecture of the control plane **820** of the IAB network may include the stack structures of the control plane of the UE **802**, an IAB node **2 804**, an IAB node **1 806**, an IAB donor-DU **808**, an IAB donor_CU-UP **810**, and an access and mobility management function (AMF) **814** of the core network. Here, the IAB node **2 804** connected to the UE **802** may be referred to as a serving IAB node **804**. The IAB node **1 806** provided along the path between the serving IAB node **804** and the IAB donor **811** may be referred to as an intermediate IAB node **806**.

The connection between the UE **802** and the serving IAB node **804** may be referred to as an NR link (or the NR Uu interface) and the RLC channel between the UE **802** and the serving IAB node **804** may be referred to as an access RLC channel.

The UPF **812** of the core network and the IAB donor **811** may be connected to each other via an NG user plane interface (NG-U), and the AMF **814** of the core network and the IAB donor **811** may be connected to each other via an NG control plane interface (NG-C).

The intermediate IAB node **806** may provide a backhaul connection between the serving IAB node **804** and the IAB donor **811**. The RLC channel between the serving IAB node **804** and the IAB donor **811** via the intermediate IAB node **806** may be referred to as a backhaul RLC channel.

The intermediate IAB node **806** may have BAP layers configured to route the data packets between the IAB donor **811** and the serving IAB node **804**. The data packets on the BAP layers may have a routing ID embedded in a BAP header of the data packets so that the data packets may be routed through the intermediate IAB node **806** between the IAB donor **811** and the target serving IAB node **804**. The serving IAB **804** may receive and transmit the data packets to and from the UE **802**.

Although FIG. **8** illustrates that the IAB network may include one intermediate IAB node **806**, aspects of the disclosure are not necessarily limited thereto, and the IAB network may include multiple intermediate IAB nodes. Accordingly, the IAB network may have more than one (1) path between the serving IAB node **804** and the IAB donor **811** established via the multiple intermediate IAB nodes.

A Quality of Service (QoS) flow may be the finest level of granularity of QoS differentiation in a protocol data unit (PDU) session. One or more QoS flows may be mapped to a data radio bearer (DRB), e.g., at an SDAP layer. Examples of QoS parameters may include a 5G QoS indicator (5QI), a flow bit rate (e.g., for a guaranteed bit rate (GBR), an aggregation bit rate (e.g., per PDU session, per UE), or an allocation and retention policy (ARP), among other examples. Examples of 5QI characteristics may include any of a type, a QoS priority level, a packet delay budget (PDB), a dynamically assigned 5QI, a packet error rate (PER), a delay-critical indication, an averaging window, a maximum data burst volume, an extended packet delay budget, a core network (CN) PDB downlink, a CN PDB uplink, etc. The QoS information may be provided by a CU to a serving DU for a UE. For example, in FIG. **5**, the CU of the IAB donor **510** may provide the QoS information to a DU of IAB node **520***b* that is serving UE **530***c*. Similarly, the CU **602** in FIG. **6** may provide the QoS information to the DU **608** that serves UE **610** or may provide QoS information to DU **614** of IAB node **616** that serves UE **620**. The CU may provide the QoS information to the serving DU for a UE per DRB and per QoS flow, e.g., via an F1-AP message.

For example, a UE context setup message over an F1-AP may indicate a DRB to be set up with setup item information elements (IEs) that include a DRB identifier (ID), choice QoS information, and an E-UTRAN QoS. The setup item IEs may further include DRB information, including one or more of a DRB QoS, a Single Network Slice Selection Assistance Information (N-SSAI), or notification control. The setup item IEs may further include a flow mapped to a DRB item, including one or more of a QoS flow identifier, a QoS flow level QoS parameter, a QoS flow mapping indication, or a time-sensitive communication (TSC) traffic characteristics. A UE context setup message may indicate one or more backhaul RLC channels to be set up. The IEs for the backhaul RLC Channel to be set up may include one or more of a backhaul RLC channel ID, choice backhaul QoS information, or E-UTRAN backhaul RLC Channel QoS, a control plane traffic type, and RLC mode, a BAP control PDU channel, traffic mapping information, or a configured BAP address. The choice QoS characteristics may indicate one or more of a non-dynamic 5QI (e.g., with a non-dynamic 5QI descriptor), a dynamic 5QI (e.g., with a dynamic 5QI descriptor), a RAN ARP, GBR QoS flow information, reflective QoS attribute, a PDU session ID, an uplink PDU session aggregate maximum bit rate, or a QoS monitoring request. The QoS parameters may define the QoS to be applied to a QoS flow, to a DRB, or to a backhaul RLC channel. For a backhaul RLC channel, the IEs and the GBR QoS flow information IE may be applicable, where the GBR QoS flow information may be present if the backhaul RLC channel conveys the traffic belonging to a GBR QoS flow. A dynamic 5QI may indicate QoS characteristics for a non-standardized or not-preconfigured 5QI for downlink and uplink communication. A non-dynamic 5QI may indicate the QoS characteristics for a standardized or preconfigured 5QI for downlink and uplink.

The PDB may define an upper bound for the time that a packet may be delayed between the UE and the UPF that terminates an N6 interface. In some examples, the PDB may be indicated in units of 0.5 ms. The extended PDB, CN PDB downlink, or CN PDB uplink may be indicated in units of 0.01 ms. For a backhaul RLC channel, the PDB may define an upper bound for the time that a packet may be delayed between an IAB-DU and its child IAB-MT. The PDB may be a QoS characteristic.

FIG. **9** illustrates an example diagram **900** showing the PDB for delivering a packet between a UPF **906** terminating at the N6 interface **916** and a UE **904**. FIG. **9** also illustrated a CN PDB between the UPF **906** and the access network **902**. As illustrated, the access network **902** may include a DU **908** and a CU control plane (CU-CP) **910**, and a CU user plane (UP) **912**. The CN PDB may be a static value (e.g., non-dynamic) or may be dynamically configured by a CU via an F1-AP. As illustrated in FIG. **9** with the dashed line **918**, the PDB and the CN PDB may be provided to the DU

908 per DRB and per QoS flow. For example, the PDB and CN PDB may be provided by the CU to the DU via an F1-AP.

The delay budget that applies to the radio interface may be determined by subtracting a static value for the CN PDB, which represents the delay between any UPF **906** terminating N6 **916** (that may possibly be selected for the PDU Session) and the access network **902** from a given PDB. For GBR QoS flows using a delay-critical resource type, in order to obtain a more accurate delay budget PDB available for a RAN, a dynamic value for the CN PDB can be used, which represents the delay between the UPF **906** terminating N6 for the QoS flow and the access network **902**. If used for a QoS flow, the RAN may apply the dynamic value for the CN PDB instead of the static value for the CN PDB, e.g., which may be related to the 5QI. As an example, a static value for the CN PDB of 1 ms, 2 ms, 5 ms, etc., for the delay between a UPF terminating N6 and an access network may be subtracted from a given PDB to derive the packet delay budget that applies to the radio interface.

FIG. **10** illustrates an example of an IAB network **1000**, including a UE **1004** that exchanges communication with the UPF **1006** via the IAB donor **1007** having a CU CP **1010**, a CU UP **1012**, and a DU **1008**. One or more intermediate IAB nodes may provide a connection between the IAB node **1020** serving the UE **1004** and the IAB donor **1007**. Each IAB node may include a DU **1016** and an MT **1014**, e.g., as described in connection with FIGS. **5** and **6**. A PDB per backhaul RLC channel may be provided to the intermediate IAB-DU. The PDB per backhaul RLC channel may provide an upper delay bound between an IAB DU and a child MT, e.g., between DU **1016** of a parent IAB node and an MT **1014** of a child IAB node served by the parent IAB node. Thus, the PDB per backhaul RLC channel (illustrated at "BHRLC_PDB" in FIG. **10**) may provide a delay bound for a single hop between IAB nodes. The PDB and CN PDB may be provided per DRB and per QoS flow to the serving IAB node **1020** of the UE **1004**, e.g., without being provided to the intermediate nodes. The PDB and CN PDB may be provided to the serving IAB node **1020**, similar to the example described in FIG. **9**, e.g., from the CU (e.g., CU-CP **1010**) of the IAB donor to the DU **1016** of the serving IAB node **1020**. The CU may indicate a one-hop PDB (e.g., the backhaul RLC PDB) to an intermediate IAB node DU. The intermediate IAB node may not know the end-to-end PDB of a QoS flow that is aggregated to the backhaul RLC.

FIG. **11** illustrates an example of IAB network **1100** with multiple intermediate IAB nodes. Referring again to FIG. **10**, a UE **1104**, a UPF **1106**, an IAB donor **1107** including a DU **1108**, a CU_CP **1110**, and a CU_UP **1112**, and an IAB node **1120** including an MT **1114** and a DU **1116** of FIG. **11** may correspond to a UE **1004**, the UPF **1006**, the IAB donor **1007** including the DU **1008**, the CU_CP **1010**, and the CU_UP **1012**, and the IAB node **1020** including the MT **1014** and the DU **1016** of FIG. **10**. The example of IAB network **1100** may include multiple intermediate IAB nodes **1122**, **1124**, and **1126**, and the multiple intermediate IAB nodes **1122**, **1124**, and **1126** may have wireless backhaul connection between the IAB node **1120** and the IAB donor **1107**.

Referring again to FIG. **9**, the CN PDB may be a static value (e.g., non-dynamic) or may be dynamically configured by a CU via an F1-AP. Also, the PDB and the CN PDB may be provided to the DU **1116** of the IAB node **1120** per DRB and per QoS flow. For example, the PDB and the CN PDB may be provided by the CU of the IAB donor **1107** to the DU via an F1-AP. Accordingly, the IAB node **1120** may determine the PDB-CN PDB **1140** between the CU of the IAB donor **1107** and the UE **1104** based on the PDB and the CN PDB provided by the CU of the IAB donor **1107**.

The IAB node **1120** may determine the access PDB **1142** between the UE **1104** and the DU **1116** of the IAB node **1120** by subtracting an F1U_PDB **1144** between the CU of the IAB donor **1107** and the DU **1116** of the IAB node **1120** from the PDB-CN PDB **1140**. Due to the multiple intermediate IAB nodes **1122**, **1124**, and **1126** of the wireless backhaul connection between the IAB node **1120** and the IAB donor **1107**, the F1U_PDB may have various latency. Therefore, the PDB and the CN_PDB provided per DRB may not be sufficient for the IAB node **1120** to determine the upper delay bound (e.g., the access PDB **1142**) over the access link. For example, the F1U_PDB may be provided via an operation, administration, and maintenance (OAM) configuration, which refers to an implementation-specific approach, where direct configuration is done by the service provider via an OAM configuration software without utilizing specification-defined signaling message. However, providing the F1U_PDB as the OAM configuration may not be a good solution due to the time-varying nature of the wireless BH connection. The latency variation over the wireless backhaul may be due to various factors or parameters.

For example, different BAP routing paths may have a different number of hops, link qualities, traffic loading, etc., which may cause the latency variation over the wireless backhaul. For example, FIG. **11** illustrates that a 1st BAP path **1130** may include one (1) intermediate IAB node **1122** and that a 2nd BAP path **1132** may include two (2) intermediate IAB nodes **1124** and **1126**. Accordingly, the number of IAB nodes in the respective BAP path may contribute to the latency variation over the wireless backhaul connection.

For another example, note that data packets taking the same BAP routing path may be allocated with different types of BH RLC channels and thus experience different BH latency. That is, among the same BAP path, different types of BH RLCs may have different priority treatments. Therefore, their QoS specification may be different, which may cause latency variation over the wireless BH connection. That is, each BH RRC channel may be intended for different kinds of traffic. For example, a BH RLC channel may be intended for low latency traffic such as ultra-reliable low latency communication (URLLC), and therefore the delay budget for the BH RLC channel may be smaller. For another example, a BH RLC channel may be intended for best-effort traffic, and therefore the delay budget for the BH RLC channel may be higher. Accordingly, each of the BH RRC channels for the same BAP path may have different latency.

For yet another example, the latency of the wireless BH connection may change due to various reasons. For example, a topology of the wireless BH connection may change to adapt to the radio link quality (e.g., RLF) or for the purpose of loading balancing, etc. Accordingly, the radio link quality of the wireless BH connection or the number of hops and intermediate IAB nodes may change, causing the over the wireless BH connection.

Accordingly, the IAB node **1120** can be indicated by the IAB donor **1107** CU with one or more delay parameters. The IAB node **1120** may determine the upper delay bounds (e.g., the access PDB **1142**) over its access links with the UE **1104** based at least in part on the indicated delay parameters. For example, the indicated delay parameters may include access latency bounds (e.g., access PDB **1142**) for an access link between the DU **1116** of the IAB node **1120** and the UE **1104**.

The indicated delay parameters may also be variations of wireless BH latency bounds. For example, the indicated delay parameters may include the F1U_PDB **1144**, which refers to the PDB between the IAB donor **1107** and the DU **1116** of the IAB node **1120**. Accordingly, the IAB node **1120** may determine the access PDB as follows:

$$\text{access PDB (1142)} = \text{PDB} - \text{CN\_PDB} - \text{F1U\_PDB (1144)} \quad (1)$$

Here, as proffered, the PDB and the CN_PDB are provided via F1-AP signaling message.

For another example, the indicated delay parameters may include an F1U_PDB' **1148**, which refers to the PDB between the IAB donor **1107** and the MT **1114** of the IAB node **1120**. Accordingly, the IAB node **1120** may determine the F1U_PDB **1144** as follows:

$$\text{F1U\_PDB (1144)} = \text{F1U\_PDB' (1148)} + \text{proc\_PDB (1146)} \quad (2)$$

Here, the proc_PDB **1146** refers to a PDB between the collocated MT **1114** and DU **1116**, which may be provided as the OAM configuration.

For another example, the indicated delay parameters may include different components of F1U_PDB **1144**. That is, the indicated delay parameters may include a BAPRouting_PDB **1150**, which refers to the PDB between the DU **1108** of the IAB donor **1107** and the DU **1116** of the IAB node **1120**. Accordingly, the IAB node **1120** may determine the F1U_PDB **1144** as follows:

$$\text{F1U\_PDB (1144)} = \text{BAPRouting\_PDB (1150)} + \text{donor\_PDB (1152)} \quad (3)$$

Here, the donor_PDB **1152** refers to the PDB between the CU of the IAB donor **1107** and the DU **1116** of the IAB node **1120** and may be included in the indicated delay parameters. In another example, the indicated delay parameters may include the BAPRouting_PDB **1150**, and the donor_PDB **1152** may be provided as the OAM configuration since the donor_PDB **1152** is the PDB of the wired connection within the IAB donor **1107**, and therefore, has less latency variation.

Although FIG. **11** illustrates that the UE **1104** is connected to the serving IAB node **1120** over the air link, the aspects of the disclosure are not necessarily limited thereto. For example, **1104** may be a child node **1104**, and **1120** may be a parent node **1120**, and the air link between the child node **1104** and the parent node **1120** may be an access RLC channel. Accordingly, the parent node **1120** may determine an access PDB over the access RLC channel between the parent node **1120** and the child node **1104** based in part on the delay parameters received from the CU of the IAB donor **1107**.

The above one or more delay parameters (i.e., F1U_PDB and its variations) of the BH latency bounds may be indicated at various granularity levels from the IAB donor **1107** to the IAB node **1120**. Accordingly, the IAB node **1120** may calculate the access PDB over the wireless access link between the DU **1116** of the IAB node **1120** and the UE **1104** at various granularity levels. For example, the delay parameters may be indicated at different granularity levels, including per one of the IAB nodes, per BAP-routing path, per the UE DRB, or per a general packet radio service (GPRS) tunneling protocol (GTP) user plane (GTP-U) tunnel of the UE DRB, from a coarser granularity level to a finer granularity level. The delay parameters with fine granularity may enable the IAB node to determine a better-optimized access PDB, with a higher cost of signaling overhead. Also, the delay parameters with coarse granularity may have a lower cost to reserve the signaling overhead, but the access PDB determined by the IAB node may have lower accuracy.

In one aspect of the disclosure, for the IAB node, the finest granularity for an IAB node to identify the delay parameters and the latency specifications may be per GTPU tunnel of the UE DRB. The DRB of a UE may be configured with up to 4 GTPU tunnels, and data packets from different GTPU tunnels may be mapped to different access RLC channels at the serving IAB node. For example, depending on the configuration of the routing table and traffic mapping table, different GTPU tunnels may take different BAP routing paths and/or different chains of BH RLC channels. For another example, data packets that belong to the same GTPU tunnel may follow the same routing path and the same chain of BH RLC channels.

In another aspect of the disclosure, depending on the network deployment scenarios, a lower granularity level (e.g., per IAB node or per BAP-routing path) may be sufficient to identify the delay parameters and the latency specifications. For example, the wireless BH network may provide a single routing path for a destination node (e.g., a wireless BH network with spanning tree architecture), and a single BH RLC channel type may be established for all data traffic types. Accordingly, the IAB node may determine a single PDB since different DRBs may experience similar BH latency.

In one example, the wireless BH may operate at a different band with a larger bandwidth than the access link between the IAB node and the UE. That is, the access PDB may be greater than the F1U_PDB between the CU of the IAB donor and the DU of the IAB node, and the latency bottleneck may mainly occur at the access links. In this case, though packets for different DRBs may take different backhaul routing paths and/or different chains of BH RLC channels, the variation of F1U_PDBs between these backhaul paths may be insignificant compared with latency over the access link. Thus, a single value of F1U_PDB may be sufficient to be applied over different DRBs for the determination of the corresponding access PDB per DRB. Accordingly, different latency bounds (or different delay parameters) may be indicated at different granularity levels. In one aspect, the BH latency bound (i.e., F1U_PDB and its variation) may be indicated by the IAB donor per IAB node, and the IAB node may determine the access latency bound (or the access PDB for each DRB of the UEs served by the IAB node, as follows:

$$\text{access PDB}_{per\ DR} = (\text{PDB-CN\_PDB})_{per\ DRB} - \text{F1U\_PDB}_{per\ IAB\ node} \quad (4)$$

In one example, the CU of the IAB donor may determine a single value for the F1U_PDB by considering the worst latency of the corresponding wireless backhaul connection, over all possible BAP routing paths and chains of BH RLC channels to this IAB node. For example, the latency bound or the delay parameters may be indicated by non-UE associated F1-AP messages and/or the RRC messaging.

In one aspect, the BH latency bound may be indicated per the BAP-routing path of the IAB node. For example, the IAB donor may indicate a table of delay bounds indicated to the IAB node as follows: (BAP-routing path1, delaybound1), (BAP-routing path2, delaybound2), . . . , (BAP-routing path n, delaybound_n). For example, the latency bound or the delay parameters may be indicated by non-UE associated F1-AP messages and/or the RRC messaging. The IAB node may receive the table of delay bounds indicated per the BAP-routing paths and determine the corresponding upper delay bound for access link for each GTPU tunnel of

the UE DRB associated with the BAP-routing path IDs. Each of the GTPU tunnels of a UE DRB may be associated with the BAP-routing path IDs based on a configuration received from IAB donor CU. Accordingly, the IAB node may determine each GTP-U tunnel of a UE DRB associated with the BAP routing path ID based on the configuration from the IAB donor-CU and further determine the corresponding upper delay bound for the access link, as follows:

$$\text{access } PDB_{per\ GTPU\ tunnel\ of\ DRB} = (PDB\text{-}CN\_PDB)_{per\ DRB} - F1U\_PDB_{per\ BAP\text{-}path\ of\ IAB\ node} \quad (5)$$

(BAP path ID associated with a GTPU tunnel of a DRB)

In one aspect, the BH latency bound may be indicated per DRB of a UE. For example, the latency bound or the delay parameters may be indicated by UE associated F1-AP messages and/or the RRC messaging. For example, the BH latency bound may be explicitly indicated with a new signaling parameter. That is, the IAB donor may signal the F1U_PDB per DRB as separate signaling, and the IAB node may determine the access PDB as follows:

$$\text{access } PDB_{per\ DRB} = (PDB\text{-}CN\_PDB)_{per\ DRB} - F1U\_PDB_{per\ DRB} \quad (6)$$

For example, the BH latency bound may be absorbed by the CN_PDB. That is, the IAB node may receive the CN_PDB carried by existing F1-AP signaling, and the IAB node may re-interpret the CN_PDB as including the F1U_PDB component. The IAB node may determine the access PDB as follows:

$$\text{access } PDB_{per\ DRB} = (PDB\text{-}CN\_PDB_{(including\_F1U\_PDB)})_{per\ DRB} \quad (7)$$

In one aspect, the BH latency bound may be indicated per GTP-U tunnel of a DRB of a UE. For example, the latency bound or the delay parameters may be indicated by UE associated F1-AP messages and/or the RRC messaging. That is, the IAB node may determine the access PDB as follows:

$$\text{access } PDB_{per\ GTPU\ tunnel\ of\ a} = (PDB\text{-}CN\_PDB)_{per\ DRB} - F1U\_PDB_{per\ GTPU\ tunnel\ of\ a\ DRB} \quad (8)$$

In one aspect, the IAB donor may directly indicate the access latency bound (i.e., access PDB) per DRB or per GTP-U tunnel of a DRB to the IAB node. For example, the latency bound or the delay parameters may be indicated by UE associated F1-AP messages and/or the RRC messaging.

In some aspects, the latency bound or the delay parameters may be indicated by the IAB donor CU to the IAB node via the F1-AP messages and/or the RRC messaging.

FIG. **12** illustrates an example of IAB network **1200**. The example of IAB network **1200** may include a UE1 **1204***a*, a UE2 **1204***b*, a first IAB node **1220***a*, and a second IAB node **1220***b*. Referring again to FIG. **12**, an IAB donor **1207**, including a DU1 **1208***a* and a DU2 **1208***b*, a CU_CP **1210**, and a CU_UP1 **1212***a* and a CU_UP2 **1212***b* of FIG. **12** may correspond to the IAB donor **1107**, including the DU **1108**, the CU_CP **1110**, and the CU_UP **1112** of FIG. **11**.

A first access link is established between the UE1 **1204***a* and the first IAB node **1220***a*, and a second access link is established between the UE2 **1204***b* and the second IAB node **1220***b*. A BH_RLCa channel is established between the DU1 **1208***a* and the first IAB node **1220***a*, and a BH_RLCb channel is established between the DU2 **1208***b* and the first IAB node **1220***a*. A BH_RLCc channel is established between the first IAB node **1220***a* and the second IAB node **1220***b*. The DU1 **1208***a* and the DU2 **1208***b* may respectively determine a BHRLC_PDBa for the BH_RLCa and a BHRLC_PDBb for the BH_RLCb.

The dotted line illustrates a UE1_DRB$_1$, referring to a DRB established between the UE1 and the DU1 **1208***a*. That is, the UE1_DRB$_1$ may take the first access link and the BH_RLCa to the IAB donor **1207** DU1 **1208***a*. Accordingly, the CU of the IAB donor **1207** may indicate a PDB1 and a CN_PDB1 to the first IAB node **1220***a*. The CU of the IAB donor **1207** may also indicate an F1U_PDB1 to the first IAB node **1220***a* so that the first IAB node **1220***a* may determine the access PDB$_1$ over the first access link. The first IAB node **1220***a* may determine the BHRLC_PDBc for the BH_RLCc.

The dashed-dotted line illustrates a UE1_DRB$_2$, referring to a DRB established between the UE1 and the DU2 **1208***b*. That is, the UE1_DRB$_2$ may take the first access link and the BH_RLCb to the IAB donor **1207** DU2 **1208***b*. Accordingly, the CU of the IAB donor **1207** may indicate a PDB2 and a CN_PDB2 to the first IAB node **1220***a*. The CU of the IAB donor **1207** may also indicate an F1U_PDB2 to the first IAB node **1220***a* so that the first IAB node **1220***a* may determine the access PDB$_2$ over the first access link.

The solid line illustrates a UE2_DRB, referring to a DRB established between the UE2 and the DU1 **1208***a*. That is, the UE2_DRB may take the second access link, the BH_RLCc, and the BH_RLCa to the IAB donor **1207** DU1 **1208***a*. Accordingly, the CU of the IAB donor **1207** may indicate a PDB3 and a CN_PDB3 to the second IAB node **1220***b*. The CU of the IAB donor **1207** may also indicate an F1U_PDB3 to the second IAB node **1220***b* so that the second IAB node **1220***b* may determine the access PDB3 over the second access link.

Accordingly, the CU of the IAB donor **1207** may indicate the F1U_PDB1 between the CU_UP1 **1212***a* and the UE of the first IAB node **1220***a*, F1U_PDB2 between the CU_UP2 **1212***b* and the UE of the first IAB node **1220***a*, and F1U_PDB3 between the CU_UP1 **1212***a* and the UE of the second IAB node **1220***b*, or the components thereof to the first IAB node **1220***a* and the second IAB node **1220***b*, and the first IAB node **1220***a* and the second IAB node **1220***b* may determine the access PDB$_1$ and the access PDB$_2$ for the UE1 **1204***a* over the first access link and the access PDB$_3$ for the UE 2 **1204***b* over the second access link.

FIG. **13** is a call-flow diagram **1300** of a method of wireless communication. The call-flow diagram **1300** may include an IAB node **1302** and an IAB donor **1304**. the IAB node **1302** to receive delay parameters from an IAB donor **1304** of the IAB network and determine an access PDB over an air link between the IAB node **1302** and a child node (or a UE) based in part on the delay parameters received from the IAB donor **1304**. The IAB donor **1304** may include a CU, and the CU may provide parameters that enable an IAB node **1302** to perform a scheduling function and a discarding function in a way that makes efficient use of wireless resources without discarding packets that may be received by a UE within a PDB.

At **1306**, the IAB donor **1304** of the IAB network may indicate at least one delay parameter to an IAB node **1302** for determination of an access PDB over an air link between the IAB node **1302** and a child node associated with a packet. The IAB node **1302** may receive at least one delay parameter from the CU of the IAB donor **1304** of the IAB network. At least one delay parameter may include the access PDB between a DU of the IAB node **1302** and the child node.

In some aspects, the one or more delay parameters from the IAB donor **1304** may include the access PDB between a DU of the IAB node **1302** and the child node, an F1U PDB between a CU of the IAB donor **1304** and the DU of the IAB node **1302**, an F1U_PDB' between the CU of the IAB donor

1304 and an MT of the IAB node 1302, or a BAPRouting_PDB between the DU of the IAB donor 1304 and the DU of the IAB node 1302.

At least one delay parameter may be received per IAB node 1302. At least one delay parameter received from the CU of the IAB donor 1304 of the IAB network may represent the worst latency over all possible BAP routing paths via BAP routing paths established between the IAB donor 1304 and the IAB node 1302.

At least one delay parameter may be received per BAP routing paths established between the IAB node 1302 and the IAB donor 1304, where the access PDB may be determined per BAP routing paths.

At least one delay parameter may be received per DRB of the child node. In one aspect, at least one delay parameter may be provided to the IAB node 1302. In another aspect, the IAB node 1302 may determine at least one delay parameter based on another parameter received in an F1-AP signaling. The another parameter may include a seventh PDB between a UPF at an N6 interface and the CU of the IAB donor 1304, and the seventh PDB may be interpreted as a PDB between the UPF at an N6 interference and a DU of the IAB node 1302.

At least one delay parameter may be received per GTP-U between the IAB node 1302 and a CU-UP of the IAB donor 1304. At least one delay parameter may include the access PDB per DRB or per general packet radio service GTP-U of the DRB. At least one delay parameter may be carried by one of a non-child node associated F1-AP signaling or a child node associated F1-AP signaling.

At 1308, the IAB node 1302 may determine an access PDB over an air link between the IAB node 1302 and a child node based at least in part on the at least one delay parameter received from the CU of the IAB donor 1304. In one aspect, the access PDB may be determined by subtracting a second PDB between the CU of the IAB donor 1304 and a DU of the IAB node 1302 from a first PDB between the CU of the IAB donor 1304 and the child node, where the at least one delay parameter may include the second PDB. In another aspect, the access PDB may be determined by subtracting a third PDB between the CU of the IAB donor 1304 and an MT of the IAB node 1302 and a fourth PDB between the MT and a DU of the IAB node 1302 from a first PDB between the CU of the IAB donor 1304 and the child node, where the at least one delay parameter may include the third PDB. In another aspect, the access PDB may be determined by subtracting a fifth PDB between a DU of the IAB donor 1304 and the DU of the IAB node 1302 and a sixth PDB between the CU of the IAB donor 1304 and the DU of the IAB donor 1304 from a first PDB between the CU of the IAB donor 1304 and the child node, where the at least one delay parameter may include the fifth PDB.

At 1310, the IAB donor 1304 may send the packet for transmission to the child node via the IAB node 1302, the packet having the access PDB indicated based on at least one delay parameter. In one aspect, at least one delay parameter may include a second PDB between the CU of the IAB donor 1304 and a DU of the IAB node 1302, where the access PDB may be determined by subtracting the second PDB from a first PDB between the CU of the IAB donor 1304 and the child node. In another aspect, at least one delay parameter may include a third PDB between the CU of the IAB donor 1304 and an MT of the IAB node 1302, where the access PDB may be determined by subtracting the third PDB and a fourth PDB between the MT and a DU of the IAB node 1302 from a first PDB between the CU of the IAB donor 1304 and the child node. In another aspect, at least one delay parameter may include a fifth PDB between a DU of the IAB donor 1304 and the DU of the IAB node 1302, where the access PDB may be determined by subtracting the fifth PDB and a sixth PDB between the CU of the IAB donor 1304 and the DU of the IAB donor 1304 from a first PDB between the CU of the IAB donor 1304 and the child node.

FIG. 14 is a flowchart 1400 of a method of wireless communication. The method may be performed by an IAB node or a component of an IAB node (e.g., the IAB node 103, 420, 520*a*, 520*b*, 606, 616, 618, 804, 806, 1120, 1122, 1124, 1126, 1220*a*, or 1220*b*; wireless device 310 or 350; the apparatus 1502). The method enables the IAB node to receive delay parameters from an IAB donor of the IAB network and determine an access PDB over an air link between the IAB node and a child node (or a UE) based in part on the delay parameters received from the IAB donor.

At 1402, the IAB node may receive at least one delay parameter from the CU of the IAB donor of the IAB network. In some aspects, the one or more delay parameters from the IAB donor may include the access PDB between a DU of the IAB node and the child node, an F1U_PDB between a CU of the IAB donor and the DU of the IAB node, an F1U_PDB' between the CU of the IAB donor and an MT of the IAB node, or a BAPRouting_PDB between the DU of the IAB donor and the DU of the IAB node. The one or more delay parameters may be received per IAB node and may represent the worst latency over all possible BAP routing paths via BAP routing paths established between the IAB donor and the IAB node. The one or more delay parameters may be received per BAP routing paths established between the IAB node and the IAB donor. One or more delay parameters may be received per DRB of the child node, and one or more delay parameters may be provided to the IAB node. The one or more delay parameters may be received per GTP-U between the IAB node and a CU-UP of the IAB donor. The one or more delay parameters may include the access PDB per DRB or per the GTP-U of the DRB. The one or more delay parameters may be carried by one of a non-child node associated F1-AP signaling or a child node associated F1-AP signaling. For example, at 1306, the IAB node 1302 may receive at least one delay parameter from the CU of the IAB donor 1304 of the IAB network. Furthermore, 1402 may be performed by a delay parameter component 1540.

At 1404, the IAB node may determine an access PDB over an air link between the IAB node and a child node based on at least in part on the at least one delay parameter received from the CU of the IAB donor. In one aspect, the access PDB may be determined by subtracting the F1U_PDB from a (PDB-CN_PDB) between the CU of the IAB donor and the child node. In another aspect, the access PDB may be determined by subtracting the F1U_PDB' and a proc_PDB between the MT and a DU of the IAB node from the (PDB-CN_PDB). In another aspect, the access PDB may be determined by subtracting the BAPRouting_PDB and a donor_PDB between the CU of the IAB donor and the DU of the IAB donor from the (PDB-CN_PDB). In another aspect, the access PDB may be determined per BAP routing paths. The IAB node may determine the one or more delay parameters based on another parameter received in an F1-AP signaling and may determine that the access PDB may be the (PDB-CN_PDB). For example, at 1308, the IAB node 1302 may determine an access PDB over an air link between the IAB node 1302 and a child node based on at least in part on the at least one delay

parameter received from the CU of the IAB donor **1304**. Furthermore, **1404** may be performed by a PDB component **1542**.

FIG. **15** is a diagram **1500** illustrating an example of a hardware implementation for an apparatus **1502**. The apparatus **1502** may be an IAB node and may include a baseband unit **1504**. The baseband unit **1504** may communicate through a cellular RF transceiver with the UE **104**; another IAB node **103**, whether a parent node or a child node; and CU **107** of a donor IAB node. The baseband unit **1504** may include a computer-readable medium/memory. The baseband unit **1504** is responsible for general processing, including the execution of software stored on the computer-readable medium/memory. The software, when executed by the baseband unit **1504**, causes the baseband unit **1504** to perform the various functions described supra. The computer-readable medium/memory may also be used for storing data that is manipulated by the baseband unit **1504** when executing software. The baseband unit **1504** further may include a reception component **1530**, a communication manager **1532**, and a transmission component **1534**. The communication manager **1532** may include the one or more illustrated components. The components within the communication manager **1532** may be stored in the computer-readable medium/memory and/or configured as hardware within the baseband unit **1504**. The baseband unit **1504** may be a component of the device **310** and may include the memory **376** and/or at least one of the TX processor **316**, the RX processor **370**, and the controller/processor **375**.

The communication manager **1532** may include a delay parameter component **1540** that is configured to receive one or more delay parameters from an IAB donor, e.g., as described in connection with **1402**. The communication manager **1532** may further include a PDB component **1542** that is configured to determine an access PDB over an air link between the IAB node and a child node or a UE based in part on the one or more delay parameters received from the IAB donor, e.g., as described in connection with **1404**. The reception component **1530** may be configured to receive the first delay parameter and the second delay parameter, e.g., as described in connection with **1402**.

The apparatus may include additional components that perform each of the blocks of the algorithm in the aforementioned flowchart of FIGS. **13** and **14**. As such, each block in the aforementioned flowchart of FIGS. **13** and **14** may be performed by a component, and the apparatus may include one or more of those components. The components may be one or more hardware components specifically configured to carry out the stated processes/algorithm, implemented by a processor configured to perform the stated processes/algorithm, stored within a computer-readable medium for implementation by a processor, or some combination thereof.

In one configuration, the apparatus **1502**, and in particular the baseband unit **1504**, includes means for receiving at least one delay parameter from a CU of an IAB donor of the IAB network and means for determining an access PDB over an air link between the IAB node and a child node based on at least in part on the at least one delay parameter received from the CU of the IAB donor. The aforementioned means may be one or more of the aforementioned components of the apparatus **1502** configured to perform the functions recited by the aforementioned means. As described supra, the apparatus **1502** may include the TX Processor **316**, the RX Processor **370**, and the controller/processor **375**. As such, in one configuration, the aforementioned means may be the TX Processor **316**, the RX Processor **370**, and the controller/processor **375** configured to perform the functions recited by the aforementioned means.

FIG. **16** is a flowchart **1600** of a method of wireless communication. The method may be performed by an IAB node CU (e.g., the CU **107**, **602**, **702**; IAB donor **410**, **510**, **810**, **1107** or **1207**; wireless device **310** or **350**; the apparatus **1702**). The method enables a CU to provide parameters that enable an IAB node to perform a scheduling function and a discarding function in a way that makes efficient use of wireless resources without discarding packets that may be received by a UE within a PDB.

At **1602**, the CU of the IAB donor may indicate one or more delay parameters to an IAB node for the determination of an access PDB over an air link between the IAB node and a child node (or a UE) associated with a data packet. In some aspects, the one or more delay parameters to the IAB node may include the access PDB between a DU of the IAB node and the child node, an F1U_PDB between a CU of the IAB donor and the DU of the IAB node, an F1U_PDB' between the CU of the IAB donor and an MT of the IAB node, or a BAPRouting_PDB between the DU of the IAB donor and the DU of the IAB node. The one or more delay parameters may be indicated per IAB node and may represent the worst latency over all possible BAP routing paths via BAP routing paths established between the IAB donor and the IAB node. The one or more delay parameters may be indicated per BAP routing paths established between the IAB node and the IAB donor. The one or more delay parameters may be indicated per DRB of the child node, and the one or more delay parameters may be provided to the IAB node. The one or more delay parameters may be indicated per GTP-U between the IAB node and a CU-UP of the IAB donor. The one or more delay parameters may include the access PDB per DRB or per the GTP-U of the DRB. The one or more delay parameters may be carried by one of a non-child node associated F1-AP signaling or a child node associated F1-AP signaling. For example, at **1306**, the IAB donor **1304** of the IAB network may indicate at least one delay parameter to an IAB node **1302** for determination of an access PDB over an air link between the IAB node **1302** and a child node associated with a packet. Furthermore, **1602** may be performed by a delay parameter component **1740**.

At **1604**, the CU of the IAB donor may send the packet for transmission to the child node via the IAB node, the packet having the access PDB indicated based on at least one delay parameter. In one aspect, at least one delay parameter may include a second PDB between the CU of the IAB donor and a DU of the IAB node, where the access PDB may be determined by subtracting the second PDB from a first PDB between the CU of the IAB donor and the child node. In another aspect, at least one delay parameter may include a third PDB between the CU of the IAB donor and an MT of the IAB node, where the access PDB may be determined by subtracting the third PDB and a fourth PDB between the MT and a DU of the IAB node from a first PDB between the CU of the IAB donor and the child node. In another aspect, at least one delay parameter may include a fifth PDB between a DU of the IAB donor **1304** and the DU of the IAB node, where the access PDB may be determined by subtracting the fifth PDB and a sixth PDB between the CU of the IAB donor and the DU of the IAB donor from a first PDB between the CU of the IAB donor and the child node. For example, at **1310**, the IAB donor **1304** may send the packet for transmission to the child node via the IAB node **1302**, the packet having the access PDB indicated based on at least one delay parameter. Furthermore, **1604** may be performed by a data packet management component **1742**.

FIG. **17** is a diagram **1700** illustrating an example of a hardware implementation for an apparatus **1702**. The apparatus **1702** is a CU or a donor IAB node and includes a baseband unit **1704**. The baseband unit **1704** may communicate through a cellular RF transceiver with one or more IAB nodes **103**. The baseband unit **1704** may include a computer-readable medium/memory. The baseband unit **1704** is responsible for general processing, including the execution of software stored on the computer-readable medium/memory. The software, when executed by the baseband unit **1704**, causes the baseband unit **1704** to perform the various functions described supra. The computer-readable medium/memory may also be used for storing data that is manipulated by the baseband unit **1704** when executing software. The baseband unit **1704** further includes a reception component **1730**, a communication manager **1732**, and a transmission component **1734**. The communication manager **1732** includes the one or more illustrated components. The components within the communication manager **1732** may be stored in the computer-readable medium/memory and/or configured as hardware within the baseband unit **1704**. The baseband unit **1704** may be a component of the device **310** and may include the memory **376** and/or at least one of the TX processor **316**, the RX processor **370**, and the controller/processor **375**.

The communication manager **1732** includes a delay parameter component **1740** that is configured to indicate one or more delay parameters to an IAB node for determination of an access PDB over an air link between the IAB node and a child node (or a UE) associated with a data packet, e.g., as described in connection with **1602**. The communication manager **1732** further includes a data packet management component **1742** that is configured to send the packet for transmission to the child node via the IAB node, the packet having the access PDB indicated based on the one or more delay parameters, e.g., as described in connection with **1604**. The transmission component **1734** sends the packet for transmission to a UE via one or more IAB nodes including the IAB node, e.g., as described in connection with **1604**.

The apparatus may include additional components that perform each of the blocks of the algorithm in the aforementioned flowchart of FIGS. **13** and **16**. As such, each block in the aforementioned flowchart of FIGS. **13** and **16** may be performed by a component, and the apparatus may include one or more of those components. The components may be one or more hardware components specifically configured to carry out the stated processes/algorithm, implemented by a processor configured to perform the stated processes/algorithm, stored within a computer-readable medium for implementation by a processor, or some combination thereof.

In one configuration, the apparatus **1702**, and in particular the baseband unit **1704**, includes means for indicating at least one delay parameter to an IAB node for determination of an access PDB over an air link between the IAB node and a child node associated with a packet, and means for sending the packet for transmission to the child node via the IAB node, the packet having the access PDB indicated based on the at least one delay parameter. The aforementioned means may be one or more of the aforementioned components of the apparatus **1702** configured to perform the functions recited by the aforementioned means. As described supra, the apparatus **1702** may include the TX Processor **316**, the RX Processor **370**, and the controller/processor **375**. As such, in one configuration, the aforementioned means may be the TX Processor **316**, the RX Processor **370**, and the controller/processor **375** configured to perform the functions recited by the aforementioned means.

An JAB node may receive one or more delay parameters from an IAB donor and determine an access PDB over an air link between the JAB node and a child node (or a UE) based in part on the one or more delay parameters received from the IAB donor. The one or more delay parameters may include the access PDB between a DU of the IAB node and the child node, an F1U_PDB between a CU of the IAB donor and the DU of the IAB node, an F1U_PDB' between the CU of the IAB donor and an MT of the IAB node, or a BAPRouting_PDB between the DU of the IAB donor and the DU of the IAB node. The access PDB may be determined by subtracting the F1U_PDB from a (PDB-CN_PDB) between the CU of the IAB donor and the child node. The access PDB may be determined by subtracting the F1U_PDB' and a proc_PDB between the MT and a DU of the IAB node from the (PDB-CN_PDB). The access PDB may be determined by subtracting the BAPRouting_PDB and a donor_PDB between the CU of the IAB donor and the DU of the IAB donor from the (PDB-CN_PDB).

It is understood that the specific order or hierarchy of blocks in the processes/flowcharts disclosed is an illustration of example approaches. Based upon design preferences, it is understood that the specific order or hierarchy of blocks in the processes/flowcharts may be rearranged. Further, some blocks may be combined or omitted. The accompanying method claims present elements of the various blocks in a sample order, and are not meant to be limited to the specific order or hierarchy presented.

The previous description is provided to enable any person skilled in the art to practice the various aspects described herein. Various modifications to these aspects will be readily apparent to those skilled in the art, and the generic principles defined herein may be applied to other aspects. Thus, the claims are not intended to be limited to the aspects shown herein, but is to be accorded the full scope consistent with the language claims, wherein reference to an element in the singular is not intended to mean "one and only one" unless specifically so stated, but rather "one or more." Terms such as "if," "when," and "while" should be interpreted to mean "under the condition that" rather than imply an immediate temporal relationship or reaction. That is, these phrases, e.g., "when," do not imply an immediate action in response to or during the occurrence of an action, but simply imply that if a condition is met then an action will occur, but without requiring a specific or immediate time constraint for the action to occur. The word "exemplary" is used herein to mean "serving as an example, instance, or illustration." Any aspect described herein as "exemplary" is not necessarily to be construed as preferred or advantageous over other aspects. Unless specifically stated otherwise, the term "some" refers to one or more. Combinations such as "at least one of A, B, or C," "one or more of A, B, or C," "at least one of A, B, and C," "one or more of A, B, and C," and "A, B, C, or any combination thereof" include any combination of A, B, and/or C, and may include multiples of A, multiples of B, or multiples of C. Specifically, combinations such as "at least one of A, B, or C," "one or more of A, B, or C," "at least one of A, B, and C," "one or more of A, B, and C," and "A, B, C, or any combination thereof" may be A only, B only, C only, A and B, A and C, B and C, or A and B and C, where any such combinations may contain one or more member or members of A, B, or C. All structural and functional equivalents to the elements of the various aspects described throughout this disclosure that are known or later come to be known to those of ordinary skill in the art are expressly

incorporated herein by reference and are intended to be encompassed by the claims. Moreover, nothing disclosed herein is intended to be dedicated to the public regardless of whether such disclosure is explicitly recited in the claims. The words "module," "mechanism," "element," "device," and the like may not be a substitute for the word "means." As such, no claim element is to be construed as a means plus function unless the element is expressly recited using the phrase "means for."

The following aspects are illustrative only and may be combined with other aspects or teachings described herein, without limitation.

Aspect 1 is an apparatus for wireless communication including at least one processor coupled to a memory and configured to receive at least one delay parameter from a CU of an IAB donor of the IAB network, and determine an access PDB over an air link between the IAB node and a child node based on at least in part on the at least one delay parameter received from the CU of the IAB donor.

Aspect 2 is the apparatus of aspect 1, further including a transceiver coupled to the at least one processor, where the at least one delay parameter includes the access PDB between a DU of the IAB node and the child node.

Aspect 3 is the apparatus of any of aspects 1 and 2, where the access PDB is determined by subtracting a second PDB between the CU of the IAB donor and a DU of the IAB node from a first PDB between the CU of the IAB donor and the child node, and the at least one delay parameter includes the second PDB.

Aspect 4 is the apparatus of any of aspects 1 to 3, where the access PDB is determined by subtracting a third PDB between the CU of the IAB donor and an MT of the IAB node and a fourth PDB between the MT and a DU of the IAB node from a first PDB between the CU of the IAB donor and the child node, and the at least one delay parameter includes the third PDB.

Aspect 5 is the apparatus of any of aspects 1 to 4, where the access PDB is determined by subtracting a fifth PDB between a DU of the IAB donor and the DU of the IAB node and a sixth PDB between the CU of the IAB donor and the DU of the IAB donor from a first PDB between the CU of the IAB donor and the child node, and the at least one delay parameter includes the fifth PDB.

Aspect 6 is the apparatus of any of aspects 1 to 5, where the at least one delay parameter is received per IAB node.

Aspect 7 is the apparatus of aspect 6, where the at least one delay parameter received from the CU of the IAB donor of the IAB network represents the worst latency over all possible BAP routing paths via BAP routing paths established between the IAB donor and the IAB node.

Aspect 8 is the apparatus of any of aspects 1 to 7, where the at least one delay parameter is received per BAP routing paths established between the IAB node and the IAB donor, and the access PDB may be determined per BAP routing paths.

Aspect 9 is the apparatus of any of aspects 1 to 8, where the at least one delay parameter is received per DRB of the child node.

Aspect 10 is the apparatus of aspect 9, where the at least one delay parameter is provided to the IAB node.

Aspect 11 is the apparatus of aspect 9, where the IAB node determines the at least one delay parameter based on another parameter received in an F1-AP signaling.

Aspect 12 is the apparatus of aspect 11, where the another parameter includes a seventh PDB between a UPF at an N6 interface and the CU of the IAB donor, and the seventh PDB is interpreted as a PDB between the UPF at an N6 interference and a DU of the IAB node.

Aspect 13 is the apparatus of any of aspects 1 to 12, where the at least one delay parameter is received per GTP-U between the IAB node and a CU-UP of the IAB donor.

Aspect 14 is the apparatus of any of aspects 1 to 13, where the at least one delay parameter includes the access PDB per DRB or per general packet radio service GTP-U of the DRB.

Aspect 15 is the apparatus of any of aspects 1 to 14, where the at least one delay parameter is carried by one of a non-child node associated F1-AP signaling or a child node associated F1-AP signaling.

Aspect 16 is a method of wireless communication for implementing any of aspects 1 to 15.

Aspect 17 is an apparatus for wireless communication including means for implementing any of aspects 1 to 15.

Aspect 18 is a computer-readable medium storing computer executable code, where the code when executed by a processor causes the processor to implement any of aspects 1 to 15.

Aspect 19 is an apparatus for wireless communication including at least one processor coupled to a memory and configured to indicate at least one delay parameter to an IAB node for determination of an access PDB over an air link between the IAB node and a child node associated with a packet, and send the packet for transmission to the child node via the IAB node, the packet having the access PDB indicated based on the at least one delay parameter.

Aspect 20 is the apparatus of aspect 19, where the at least one delay parameter includes the access PDB between a DU of the IAB node and the child node.

Aspect 21 is the apparatus of any of aspects 19 and 20, where the at least one delay parameter includes a second PDB between the CU of the IAB donor and a DU of the IAB node, and the access PDB is determined by subtracting the second PDB from a first PDB between the CU of the IAB donor and the child node.

Aspect 22 is the apparatus of any of aspects 19 to 21, where the at least one delay parameter includes a third PDB between the CU of the IAB donor and an MT of the IAB node, and the access PDB is determined by subtracting the third PDB and a fourth PDB between the MT and a DU of the IAB node from a first PDB between the CU of the IAB donor and the child node.

Aspect 23 is the apparatus of any of aspects 19 to 22, where the at least one delay parameter includes a fifth PDB between a DU of the IAB donor and the DU of the IAB node, and the access PDB is determined by subtracting the fifth PDB and a sixth PDB between the CU of the IAB donor and the DU of the IAB donor from a first PDB between the CU of the IAB donor and the child node.

Aspect 24 is the apparatus of any of aspects 19 to 23, where the at least one delay parameter is indicated per IAB node.

Aspect 25 is the apparatus of aspect 24, where the at least one delay parameter indicated to the IAB node represents the worst latency over all possible BAP routing paths via BAP routing paths established between the IAB donor and the IAB node.

Aspect 26 is the apparatus of any of aspects 19 to 25, where the at least one delay parameter is indicated to the IAB node per BAP routing paths established between the IAB node and the IAB donor, and the access PDB may be determined per BAP routing paths.

Aspect 27 is the apparatus of any of aspects 19 to 26, where the at least one delay parameter is indicated per DRB of the child node.

Aspect 28 is the apparatus of aspect 27, where the at least one delay parameter is provided to the IAB node.

Aspect 29 is the apparatus of aspect 27, where the IAB node determines the at least one delay parameter based on another parameter indicated in an F1-AP signaling.

Aspect 30 is the apparatus of aspect 29, where the another parameter includes a seventh PDB between an UPF at an N6 interface and the CU of the IAB donor, and the seventh PDB is interpreted as a PDB between the UPF at an N6 interference and a DU of the IAB node.

Aspect 31 is the apparatus of any of aspects 19 to 30, where the at least one delay parameter is indicated per GTP-U between the IAB node and a CU-UP of the IAB donor.

Aspect 32 is the apparatus of any of aspects 19 to 31, where the at least one delay parameter includes the access PDB per DRB or per general packet radio service GTP-U of the DRB.

Aspect 33 is the apparatus of any of aspects 19 to 32, where the at least one delay parameter is carried by one of a non-child node associated F1-AP signaling or a child node associated F1-AP signaling.

Aspect 34 is a method of wireless communication for implementing any of aspects 19 to 33.

Aspect 35 is an apparatus for wireless communication including means for implementing any of aspects 19 to 33.

Aspect 36 is a computer-readable medium storing computer executable code, where the code when executed by a processor causes the processor to implement any of aspects 19 to 33.

What is claimed is:

1. An apparatus for wireless communication at an Integrated Access and Backhaul (IAB) node of an IAB network, comprising:

memory; and

at least one processor coupled to the memory, the at least one processor and the memory configured to:

receive at least one delay parameter from a central unit (CU) of an IAB donor of the IAB network, wherein the at least one delay parameter is indicated by the CU of the IAB donor to the IAB node via an F1 application protocol (AP) (F1-AP) message, and wherein the at least one delay parameter is configured for the IAB node; and

determine an access packet delay budget (PDB) over an air link between the IAB node and a user equipment based on at least in part on the at least one delay parameter received from the CU of the IAB donor, wherein to determine the access PDB, the at least one processor is configured to determine the access PDB by subtracting a first PDB between the CU of the IAB donor and a mobile termination (MT) of the IAB node or between a distributed unit (DU) of the IAB donor and the DU of the IAB node, and a second PDB between the MT and a distributed unit (DU) of the IAB node or between the CU of the IAB donor and the DU of the IAB donor, from a third PDB between the CU of the IAB donor and the user equipment, wherein the at least one delay parameter includes the first PDB.

2. The apparatus of claim **1**, further comprising a transceiver coupled to the at least one processor, wherein the at least one delay parameter includes the access PDB between a distributed unit (DU) of the IAB node and the user equipment.

3. The apparatus of claim **1**, wherein to determine the access PDB, the at least one processor is configured to determine the access PDB by subtracting the first PDB between the CU of the IAB donor and the MT of the IAB node and the second PDB between the MT and the DU of the IAB node from the third PDB between the CU of the IAB donor and the user equipment,

wherein the at least one delay parameter includes the first PDB.

4. The apparatus of claim **1**, wherein to determine the access PDB, the at least one processor is configured to determine the access PDB by subtracting the first PDB between the of the IAB donor and the DU of the IAB node and the second PDB between the CU of the IAB donor and the DU of the IAB donor from the third PDB between the CU of the IAB donor and the user equipment,

wherein the at least one delay parameter includes the first PDB.

5. The apparatus of claim **1**, wherein to receive the at least one delay parameter, the at least one processor is configured to receive the at least one delay parameter per IAB node.

6. The apparatus of claim **5**, wherein the at least one delay parameter received from the CU of the IAB donor of the IAB network represents a worst latency over all possible backhaul adaptation protocol (BAP) routing paths via BAP routing paths established between the IAB donor and the IAB node.

7. The apparatus of claim **1**, wherein to receive the at least one delay parameter, the at least one processor is configured to receive the at least one delay parameter per backhaul adaptation protocol (BAP) routing paths established between the IAB node and the IAB donor,

wherein to determine the access PDB, the at least one processor is configured to determine the access PDB per BAP routing paths.

8. The apparatus of claim **1**, wherein to receive the at least one delay parameter, the at least one processor is configured to receive the at least one delay parameter per data radio bearer (DRB) of the user equipment.

9. The apparatus of claim **8**, wherein the IAB node is configured to determine the at least one delay parameter based on another parameter received in an F1-AP signaling.

10. The apparatus of claim **9**, wherein the another parameter comprises first PDB between a user plane function (UPF) at an N6 interface and the CU of the IAB donor,

wherein the first PDB is interpreted as a second PDB between the UPF at an N6 interference and a distributed unit (DU) of the IAB node.

11. The apparatus of claim **1**, wherein to receive the at least one delay parameter, the at least one processor is configured to receive the at least one delay parameter per general packet radio service (GPRS) tunneling Protocol (GTP) user plane (GTP-U) between the IAB node and a CU user plane (CU-UP) of the IAB donor.

12. The apparatus of claim **1**, wherein the at least one delay parameter comprises the access PDB per data radio bearer (DRB) or per general packet radio service tunneling protocol user plane (GTP-U) of the DRB.

13. The apparatus of claim **1**, wherein the F1-AP message is a non-user equipment (UE)-associated F1-AP message or a UE-associated F1-AP message.

14. A method of wireless communication at an Integrated Access and Backhaul (IAB) node of an IAB network, comprising:

receiving at least one delay parameter from a central unit (CU) of an IAB donor of the IAB network, wherein the at least one delay parameter is indicated by the CU of the IAB donor to the IAB node via an F1 application

protocol (AP) (F1-AP) message, and wherein the at least one delay parameter is configured for the IAB node; and

determining an access packet delay budget (PDB) over an air link between the IAB node and a user equipment based on at least in part on the at least one delay parameter received from the CU of the IAB donor, wherein determining the access PDB comprises determining the access PDB by subtracting a first PDB between the CU of the IAB donor and a mobile termination (MT) of the IAB node or between a distributed unit (DU) of the IAB donor and the DU of the IAB node, and a second PDB between the MT and a distributed unit (DU) of the IAB node or between the CU of the IAB donor and the DU of the IAB donor, from a third PDB between the CU of the IAB donor and the user equipment, wherein the at least one delay parameter includes the first PDB.

15. A apparatus of wireless communication at a central unit (CU) of an Integrated Access and Backhaul (IAB) donor of an IAB network, comprising:

memory; and

at least one processor coupled to the memory, the at least one processor and the memory configured to:

indicate at least one delay parameter to an IAB node for determination of an access packet delay budget (PDB) over an air link between the IAB node and a user equipment associated with a packet, wherein the at least one delay parameter is indicated by the CU of the IAB donor to the IAB node via an F1 application protocol (AP) (F1-AP) message, and wherein the at least one delay parameter is configured for the IAB node; and

send the packet for transmission to the user equipment via the IAB node, the packet having the access PDB indicated based on the at least one delay parameter, wherein the access PDB is based on subtracting a first PDB between the CU of the IAB donor and a mobile termination (MT) of the IAB node or between a distributed unit (DU) of the IAB donor and the DU of the IAB node, and a second PDB between the MT and a distributed unit (DU) of the IAB node or between the CU of the IAB donor and the DU of the IAB donor, from a third PDB between the CU of the IAB donor and the user equipment, wherein the at least one delay parameter includes the first PDB.

16. The apparatus of claim **15**, further including a transceiver coupled to the at least one processor, wherein the at least one delay parameter includes the access PDB between a distributed unit (DU) of the IAB node and the user equipment.

17. The apparatus of claim **15**, wherein the at least one delay parameter includes the first PDB between the CU of the IAB donor and the MT of the IAB node,

wherein the access PDB is configured to be based on subtracting the first PDB and the second PDB between the MT and the DU of the IAB node from the third PDB between the CU of the IAB donor and the user equipment.

18. The apparatus of claim **15**, wherein the at least one delay parameter includes the first PDB between the DU of the IAB donor and the DU of the IAB node,

wherein the access PDB is configured to be determined by subtracting the first PDB and the second PDB between the CU of the IAB donor and the DU of the IAB donor from the third PDB between the CU of the IAB donor and the user equipment.

19. The apparatus of claim **15**, wherein to indicate the at least one delay parameter, the at least one processor is configured to indicate the at least one delay parameter per the IAB node.

20. The apparatus of claim **19**, wherein the at least one delay parameter indicated to the IAB node represents a worst latency over all possible backhaul adaptation protocol (BAP) routing paths via BAP routing paths established between the IAB donor and the IAB node.

21. The apparatus of claim **15**, wherein to indicate the at least one delay parameter, the at least one processor is configured to indicate the at least one delay parameter to the IAB node per backhaul adaptation protocol (BAP) routing paths established between the IAB node and the IAB donor,

wherein the access PDB is configured to be determined per BAP routing paths.

22. The apparatus of claim **15**, wherein to indicate the at least one delay parameter, the at least one processor is configured to indicate the at least one delay parameter per data radio bearer (DRB) of the user equipment.

23. The apparatus of claim **22**, wherein the IAB node is configured to determine the at least one delay parameter based on another parameter indicated in an F1-AP signaling.

24. The apparatus of claim **15**, wherein to indicate the at least one delay parameter, the at least one processor is configured to indicate the at least one delay parameter per general packet radio service (GPRS) tunneling protocol (GTP) user plane (GTP-U) between the IAB node and a CU user plane (CU-UP) of the IAB donor.

25. The apparatus of claim **15**, wherein the at least one delay parameter comprises the access PDB per data radio bearer (DRB) or per general packet radio service tunneling protocol user plane (GTP-U) of the DRB.

26. The apparatus of claim **15**, wherein the F1-AP message is a non-user equipment (UE)-associated F1-AP message or a UE-associated F1-AP message.

27. A method of wireless communication at a central unit (CU) of an Integrated Access and Backhaul (IAB) donor of an IAB network, comprising:

indicating at least one delay parameter to an IAB node for determination of an access packet delay budget (PDB) over an air link between the IAB node and a user equipment associated with a packet, wherein the at least one delay parameter is indicated by the CU of the IAB donor to the IAB node via an F1 application protocol (AP) (F1-AP) message, and wherein the at least one delay parameter is configured for the IAB node; and

sending the packet for transmission to the user equipment via the IAB node, the packet having the access PDB indicated based on the at least one delay parameter, wherein the access PDB is based on subtracting a first PDB between the CU of the IAB donor and a mobile termination (MT) of the IAB node or between a distributed unit (DU) of the IAB donor and the DU of the IAB node, and a second PDB between the MT and a distributed unit (DU) of the IAB node or between the CU of the IAB donor and the DU of the IAB donor, from a third PDB between the CU of the IAB donor and the user equipment, wherein the at least one delay parameter includes the first PDB.

* * * * *