No. 752,683. PATENTED FEB. 23, 1904.

A. KELLER.

CONTROLLING MECHANISM FOR AUTOMATIC MUSICAL INSTRUMENTS.

APPLICATION FILED APR. 22, 1903.

NO MODEL. 2 SHEETS—SHEET 1.

Fig. 1.

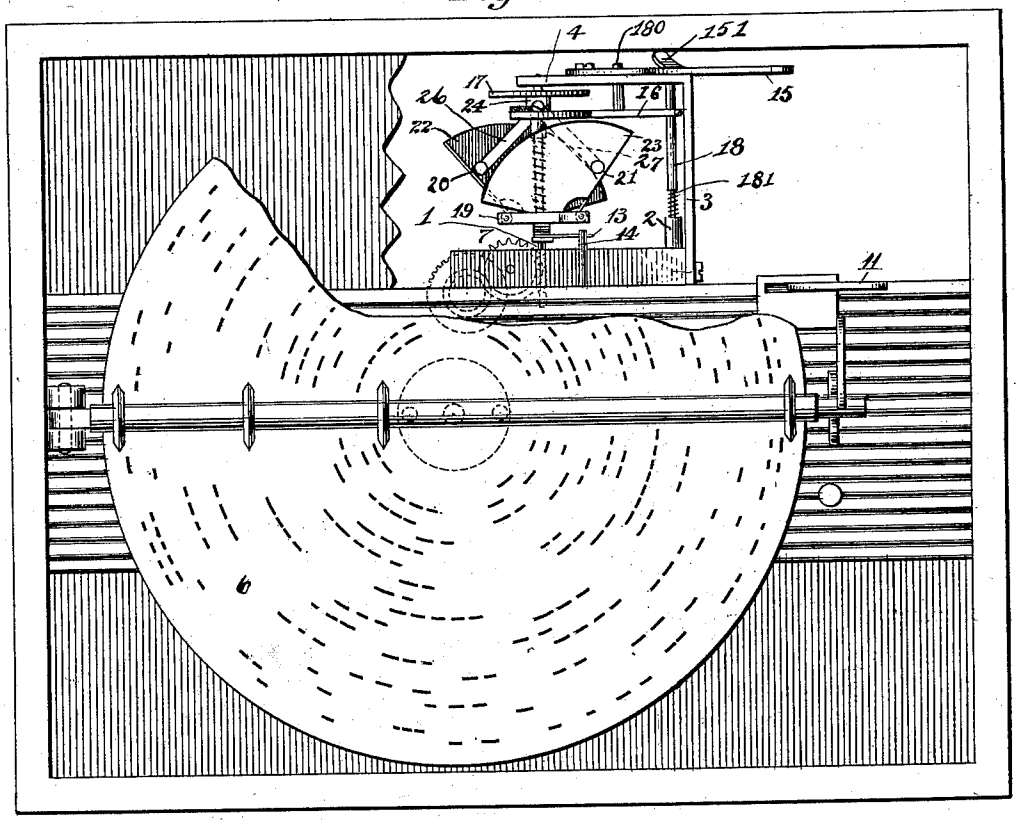

Fig. 2.

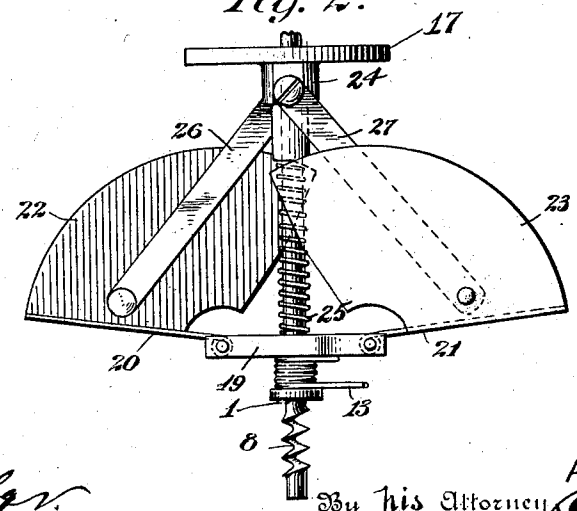

Witnesses

Inventor
ALFRED KELLER

By his Attorney R. Mitchell.

THE NORRIS PETERS CO., PHOTO-LITHO., WASHINGTON, D. C.

No. 752,683. PATENTED FEB. 23, 1904.

A. KELLER.

CONTROLLING MECHANISM FOR AUTOMATIC MUSICAL INSTRUMENTS.

APPLICATION FILED APR. 22, 1903.

NO MODEL. 2 SHEETS—SHEET 2.

Fig. 3.

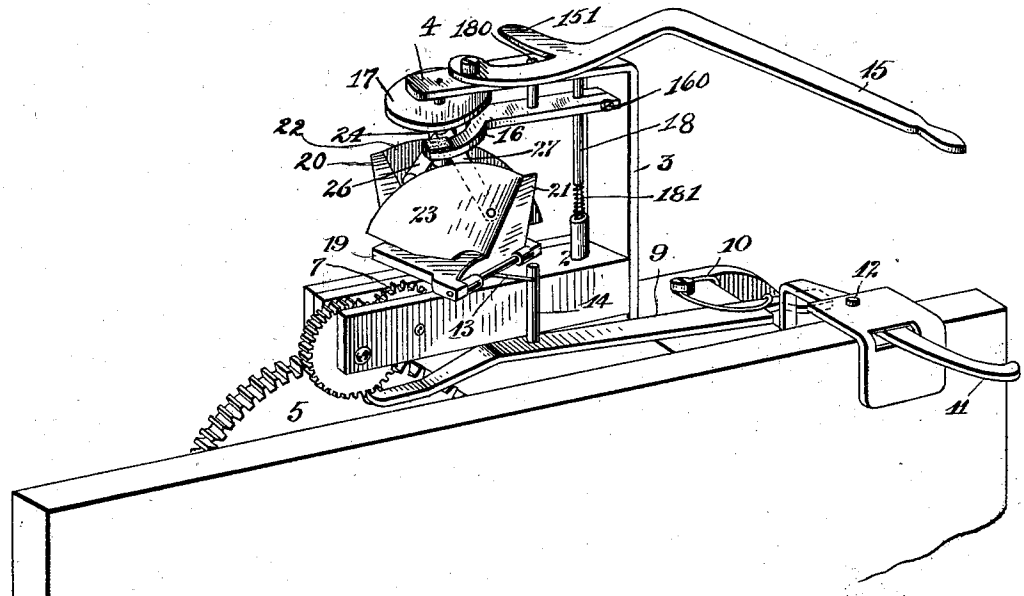

Fig. 7.

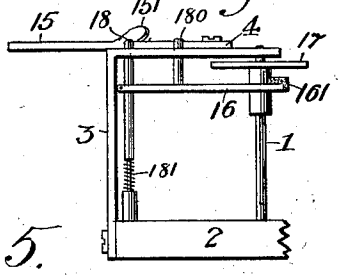

Fig. 4.

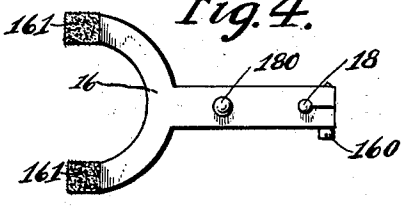

Fig. 5.

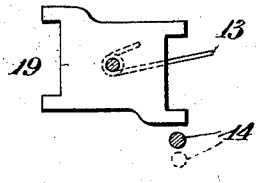

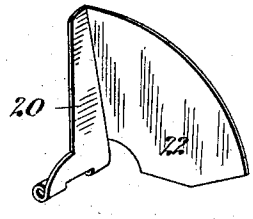

Fig. 6.

Witnesses

Inventor.
ALFRED KELLER

By his Attorney

THE NORRIS PETERS CO., PHOTO-LITHO., WASHINGTON, D. C.

No. 752,683. Patented February 23, 1904.

UNITED STATES PATENT OFFICE.

ALFRED KELLER, OF ST. CROIX, SWITZERLAND, ASSIGNOR TO LOUIS PHILIPPE MERMOD, GUSTAVE ALFRED MERMOD, AND LEON MARCEL MERMOD, COPARTNERS TRADING AS MERMOD FRÉRES, OF ST. CROIX, SWITZERLAND.

CONTROLLING MECHANISM FOR AUTOMATIC MUSICAL INSTRUMENTS.

SPECIFICATION forming part of Letters Patent No. 752,683, dated February 23, 1904.

Application filed April 22, 1903. Serial No. 153,735. (No model.)

To all whom it may concern:

Be it known that I, ALFRED KELLER, a citizen of Germany, residing at St. Croix, canton of Vaud, Switzerland, have invented certain new and useful Improvements in Controlling Mechanism for Automatic Musical Instruments, of which the following is a full, clear, and exact description.

My invention relates to improvements in controlling mechanism for automatic musical instruments.

The object of this invention is to provide controlling mechanism for automatic musical instruments which shall be simple and easily managed and the construction of which shall be such that the mechanism may be started and stopped without injury to the parts. During operation the speed of the mechanism is automatically governed and remains substantially constant after once being started. The speed may be controlled, however, as desired.

It consists in the improvements in construction constituting mechanism for governing the starting, stopping, and regulation, more particularly as set forth in the accompanying drawings and in the following specification.

Figure 1 is a plan view of an automatic musical instrument embodying the improvements of my invention, parts being broken away to show the controlling mechanism at rest. Fig. 2 is a plan view of the governor-shaft and attached parts in operation and nearly full-speed position. Fig. 3 is a perspective view of those parts of the instrument which embody the improvements of my invention. Fig. 4 is a plan view of the brake-arm, showing the regulating-handle dotted. Fig. 5 is a plan view of a base-plate of the governor and a cross-section of the shaft and stop. Fig. 6 is a perspective view of one wing of the governor. Fig. 7 is a view of the brake mechanism from the under side on a scale similar to Fig. 1, the governor-wings being removed.

1 is the governor-shaft, which has a bearing in the block 2.

3 is a post secured to the block 2 and having an arm 4, which provides the outer bearing for the governor-shaft 1.

5 is a main driving-gear which operates a tune-disk 6 as well as the governor.

7 is a worm-gear constituting the final member of the train operated by the gear 5.

8 is a worm which constitutes a part of the shaft 1 of the governor and which gears with the worm-wheel 7. Through this train of gears the governor-shaft 1 is revolved by a suitable operating mechanism, such as that more particularly set forth in my application Serial No. 153,736, filed herewith.

9 is a pivoted stop-arm, the left-hand end of which is adapted to engage in a recess in the gear 5 to stop the instrument.

10 is a spring which normally holds the left-hand end of this arm in a depressed position, either against the lever 11, the gear 5, or in the recess in the gear.

11 is a controlling-lever pivoted at 12, by means of which the mechanism is started and stopped, as desired. In the position shown in Figs. 1 and 3 the mechanism is at rest. By moving the handle of the lever 11 to the left the stop-arm 9 may be operated so as to release the gear 5 and allow the instrument to operate.

13 is an auxiliary stop carried by the governor-shaft 1, which is adapted to engage pin 14, carried by stop-arm 9. This stop 13 is preferably at one end of a spring wound about the shaft and engaged by the base-plate 19 of the governor.

15 is a regulating-lever pivoted to the arm 4 of the frame. This is adapted to operate the brake 16.

17 is a disk carried by the governor-shaft 1, which coacts with the brake 16 or a portion thereof. The brake 16 is mounted on the rod 18, which is longitudinally movable in the frames 4 and 2. The brake is secured to the rod by the screw 160 in the split end, which clamps it to the rod 18 in the position desired.

180 is a guide-rod carried by the brake-arm 16, which slides in a passage in the arm 4.

181 is a spring which forces the brake-rod 18 and arm 16 outward.

151 is an inclined portion or cam carried by the regulating-lever 15, which is adapted to coact with the outer end of the brake-rod 18. This is formed by bending the part 151 at an angle to the body of the lever, which lies parallel to the frame 4. The longitudinal position of the brake-rod 18 and arm 16 is therefore dependent upon the position of the lever 15 and its cam 151. 161 161 are brake-shoes, preferably of a yielding material, such as chamois or leather, which serve to act as braking-surfaces in conjunction with the brake-disk 17.

When an instrument of this general character is operating under the impulse of the ordinary clock-spring, there is a tendency as the spring unwinds, and the impulse given to the gears is consequently decreased, for the speed of the instrument to gradually decrease. Since this is very disadvantageous to a successful operation of the instrument, I have provided a governor which operates to retard or permit acceleration of the speed of the parts at the proper instants.

19 is the base-plate of the governor, which is secured to the shaft 1. 20 and 21 are arms pivotally connected to this base-plate 19 at opposite sides and in slightly offset position, the axes of their pivots being substantially parallel and at right angles to the shaft. 22 and 23 are wings secured to these arms 20 and 21, respectively. They are preferably stamped and formed of one piece with the arms.

24 is a sleeve slidably mounted on the shaft 1 and pressed from the base-plate 19 by means of the spring 25. The brake-disk is carried by this sleeve.

26 and 27 are links provided, respectively, for the wings 22 and 23 and by means of which these wings are held in a normal position, as shown in Figs. 1 and 3, under the impulse of the spring 25. The compression of the spring 25 as the wings fly outward and the centrifugal force increases is also increased, so as to a certain extent offset this effect. The effective resistance area of the wings of the governor may be always calculated as twice the area of a single wing minus the area of overlap. Since each wing of the governor is formed at an angle to its arm and rotates about the shaft 1 in the direction of the arm, a kind of scoop effect is attained, which greatly improves the effective operation.

When the instrument is first started into operation, there is a certain wind resistance, course, to the turning of the governor. As the instrument gets up speed the two wings 22 and 23 by centrifugal force are gradually thrown outward against the resistance of the spring 25. During the first portion of this speeding-up period it will be observed that the increase of resistance area is practically negligible. This is due to the fact that the normal overlap at the start or "rest" position is practically the same as the overlap at normal speed. This permits the instrument to come up quickly to its calculated running speed. Whenever the speed of the governor is sufficient to draw the disk 17 down into contact with the brake member of the regulator, acceleration is prevented. The speed, therefore, cannot rise above that determined by the position of the brake member.

The centrifugal force of each wing, which tends to throw it outward as the governor revolves, is the result of the combined effect of the speed, the weight of the member, and the distance of their centers of gravity from the axis of rotation or moment-arm. Since the weights are constant and the variable speed causes corresponding variations in the moment-arm, some variable resistance must be provided which will offset the changing speed as well as the change of the moment-arm. The shape of the wings of the governor is such that the change in the effective resistance area approximately corresponds with the change in the moment-arm. Consequently as the speed increases, and the moment-arm correspondingly, the resistance area also increases, which tends to check the rotation of the governor, and thus hold it down to that speed which is limited by the brake-regulator and, conversely, to come up to the speed when required.

The advantages of this simple construction, which has such self-governing characteristics, are obvious.

What I claim is—

1. A governor of the character described, including a rotatable shaft, a base-plate carried thereby, a pair of wings pivoted to said base-plate and resting against the same when at rest, a disk mounted on said shaft connected to said wings and movable longitudinally as the wings swing about their pivots, a brake-arm adapted to coact with the disk and means for adjusting the position of the brake-arm relatively to the disk.

2. A governor of the character described, including a rotatable shaft, a base-plate carried thereby, a pair of wings pivoted to said base-plate, and resting against the same when at rest; a disk mounted on said shaft connected to said wings and movable longitudinally as the wings swing about their pivots, a brake-arm adapted to coact with the disk, a longitudinally-movable rod carrying said brake-arm, a frame forming supports for said rod, one end of the rod projecting beyond a portion of the frame and a lever pivoted to said frame having a cam-face adapted to coact with the rod to adjust its position.

3. A governor of the character described comprising a pair of rotatable wind-resisting wings, a shaft therefor, a rotatable disk on said shaft and longitudinally movable thereon, a connection between said disk and said wings,

a frame forming a support for one end of said shaft, a brake having arms for engagement with said disk, a rod secured to said brake and having a longitudinal movement parallel to said shaft, a spring pressing against said rod, the end of said rod projecting through said frame and having a bearing therein, a lever pivoted to said frame and having a cam-surface for engagement with the end of said rod.

4. A governor of the character described comprising, a rotatable shaft, a base-plate mounted thereon, a pair of wings pivoted to said base-plate with their axes at right angles to the shaft, the wind-resisting area of each of said wings comprising a surface substantially a quarter-segment of a circle with its inner edge resting against said plate and said wings overlapping when in their position of rest.

Signed at Geneva, Switzerland, this 8th day of April, 1903.

ALFRED KELLER.

Witnesses:
CHARLES KIENLE,
L. H. MUNICRY.