(12) INTERNATIONAL APPLICATION PUBLISHED UNDER THE PATENT COOPERATION TREATY (PCT)

(19) World Intellectual Property Organization
International Bureau

(43) International Publication Date
31 May 2019 (31.05.2019)

WIPO | PCT

(10) International Publication Number
WO 2019/102501 A1

(51) International Patent Classification:
A61F 5/41 (2006.01) *A61F 6/04* (2006.01)

(21) International Application Number:
PCT/IT2017/000267

(22) International Filing Date:
24 November 2017 (24.11.2017)

(25) Filing Language: Italian

(26) Publication Language: English

(72) Inventors; and
(71) Applicants: **BOSCHETTO, Carlo** [IT/IT]; Via Carlo Albizzati, 519, 00119 Roma (RM) (IT). **BOSCHETTO, Emiliano** [IT/IT]; Via Mastro Giorgio, 8, 00153 Roma (RM) (IT). **BOSCHETTO, Caterina** [IT/IT]; Via Acusilao, 43, 00124 Roma (RM) (IT).

(74) Agent: **MARI, Marco Giovanni**; c/o Ing. Mari & C. Srl, Via Garibotti, 3, 26100 Cremona (IT).

(81) Designated States *(unless otherwise indicated, for every kind of national protection available)*: AE, AG, AL, AM, AO, AT, AU, AZ, BA, BB, BG, BH, BN, BR, BW, BY, BZ, CA, CH, CL, CN, CO, CR, CU, CZ, DE, DJ, DK, DM, DO, DZ, EC, EE, EG, ES, FI, GB, GD, GE, GH, GM, GT, HN, HR, HU, ID, IL, IN, IR, IS, JO, JP, KE, KG, KH, KN, KP, KR, KW, KZ, LA, LC, LK, LR, LS, LU, LY, MA, MD, ME, MG, MK, MN, MW, MX, MY, MZ, NA, NG, NI, NO, NZ, OM, PA, PE, PG, PH, PL, PT, QA, RO, RS, RU, RW, SA, SC, SD, SE, SG, SK, SL, SM, ST, SV, SY, TH, TJ, TM, TN, TR, TT, TZ, UA, UG, US, UZ, VC, VN, ZA, ZM, ZW.

(84) Designated States *(unless otherwise indicated, for every kind of regional protection available)*: ARIPO (BW, GH, GM, KE, LR, LS, MW, MZ, NA, RW, SD, SL, ST, SZ, TZ, UG, ZM, ZW), Eurasian (AM, AZ, BY, KG, KZ, RU, TJ, TM), European (AL, AT, BE, BG, CH, CY, CZ, DE, DK, EE, ES, FI, FR, GB, GR, HR, HU, IE, IS, IT, LT, LU, LV, MC, MK, MT, NL, NO, PL, PT, RO, RS, SE, SI, SK, SM, TR), OAPI (BF, BJ, CF, CG, CI, CM, GA, GN, GQ, GW, KM, ML, MR, NE, SN, TD, TG).

Declarations under Rule 4.17:
— *of inventorship (Rule 4.17(iv))*

Published:
— *with international search report (Art. 21(3))*

(54) Title: DEVICE FOR OVERCOMING ERECTILE DYSFUNCTION

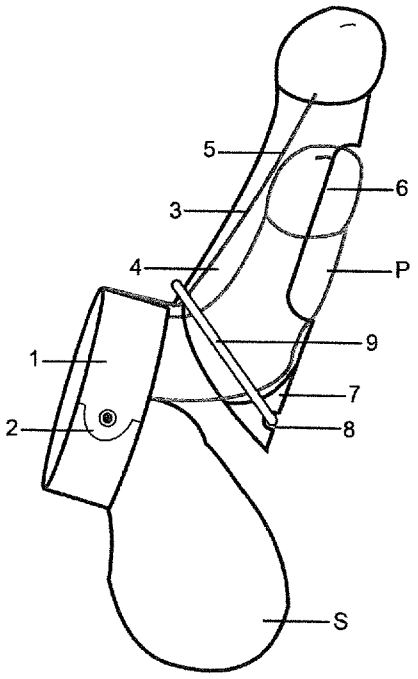

FIG. 4

(57) Abstract: The invention concerns a device for overcoming erectile dysfunction, comprising: - an annular band (1), adapted to be applied between the root of the scrotum and the base of an impotent flaccid penis (P); - a supporting shaft (3), associated with said annular band (1); - a capsule (4) for containing said impotent flaccid penis (P), adapted to be coupled to said supporting shaft (3), where said band (1), said shaft (3) and said capsule (4) cooperate to facilitate natural insertion of said impotent flaccid penis (P) into the vagina and consequent performance of sexual intercourse that is functional and satisfactory for both subjects.

WO 2019/102501 A1

DEVICE FOR OVERCOMING ERECTILE DYSFUNCTION

* * * * *

Technical field of the invention

The invention relates to the sector of medical devices to aid physiological handicaps of the male reproductive system.

More in detail, the invention concerns a device for overcoming erectile dysfunction.

The male problem of erectile dysfunction, commonly referred to as sexual impotence, consists in the impossibility of reaching and maintaining a sufficiently strong erection to allow sexual intercourse that is functional and satisfactory both for the man and for the woman.

To overcome the male problem of erectile dysfunction the following solutions are conventionally adopted:

- vacuum pumps, applicable and operable on the male sexual organ to cause a mechanical erection, through a flow of blood forced through the related corpora cavernosa;
- hollow penile prostheses, which can be placed over the male sexual organ to simulate an erection;
- artificial penile implants, surgically implantable in the male sexual organ to strengthen the deficient erective action of the natural corpora cavernosa;
- pharmaceutical products, applicable locally or taken orally to cause a chemical erection of the male sexual organ.

The aforesaid solutions have important negative factors, as:

- vacuum pumps oblige the subject to use an elastic ring at the base of the penis to prevent emptying of the corpora cavernosa for the time sufficient to complete sexual intercourse, dangerously blocking the natural blood flow in the male sexual organ;
- penile prostheses required cumbersome and uncomfortable harnesses to constrain them to the hips of the user, rising from under the scrotum to the waist, cover the penis completely and therefore do not allow tactile stimulation of the male sexual organ on the vaginal walls;

- artificial penile implants must be reversibly filled with expansion fluids operated by subcutaneous pumps, to be used manually just before and at the end of sexual intercourse, and have high risks of infection;
- pharmaceutical products require to be applied or taken before the sexual intercourse, their efficacy is uncertain and they have inevitable side effects.

Summary of the invention

The object of the invention is to overcome the aforesaid drawbacks of the solutions conventionally used to combat the male problem of erectile dysfunction, through the production of a device adapted to allow individuals suffering from erectile dysfunctions or weak erections natural insertion of the male sexual organ into the vagina and consequent performance of sexual intercourse that is functional and satisfactory.

The object of the invention is achieved with a device for overcoming erectile dysfunction according to the independent claim 1.

Further features of the invention are described in the dependent claims.

The device forming the subject matter of the invention produces the following important advantages, allowing individuals suffering from erectile dysfunctions or weak erections to:

- provide for natural insertion of the sexual organ into the vagina and consequent natural performance of sexual intercourse that is functional and satisfactory for both subjects;
- benefit from the natural stimulation of the male sexual organ through contact with the vaginal walls as a result of pelvic thrusts of the sexual intercourse in progress;
- provide for continuation of the sexual intercourse in progress until reaching the female orgasm, which physiologically takes longer to reach than the male orgasm.

The device forming the subject matter of the invention produces the further important advantages of:

- having minimum overall dimensions;

- being easy and quick to apply to the male sexual organ;
- being simple to use.

Brief description of the drawings

Further features and advantages of the invention will be more evident from the more detailed description set forth below, with the aid of the drawings, which show a preferred embodiment thereof, illustrated by way of non-limiting example, wherein:

- Fig. 1 shows, in a flat side view and in an exploded view, the structural form of a device for overcoming erectile dysfunctions according to the invention;
- Fig. 2 shows, in a longitudinal section, a component of said device;
- Fig. 3 shows, in a flat side view, said device during preparation for use;
- Fig. 4 shows, in a flat side view, said device during use.

Detailed description of the invention

With reference to the details of the figures, a device for overcoming erectile dysfunctions according to the invention substantially comprises:

- an annular band 1, adapted to surround the root of the scrotum and the base of an impotent flaccid penis P;
- a supporting shaft 3, associated with said annular band 2;
- a semi-rigid capsule 4, phallic shaped, which can be coupled to said supporting shaft 3, adapted to contain said impotent flaccid penis P;
- an elastic ring 9.

The annular band 1, made with textile or plastic materials, which may also be elastic, comprises reversible closing and adjustment means 2, of the type with a buckle or Velcro® inserts.

The supporting shaft 3, made of metal material, is constructively or reversibly associated with the annular band 1 and acts as stiffening element of the capsule 4.

Said shaft 3 can be bent and formed by the user to direct the inclination and adjust the form of the capsule 4.

The semi-rigid capsule 4, made of medical plastic or silicone materials, comprises:

- a longitudinal seat 5, adapted to be engaged by said supporting shaft 3, allowing reversible coupling of the capsule 4 to the supporting shaft 3;
- a window 6, adapted to allow the penis P to face outward to facilitate stimulation of the frenulum and of the front part of the flaccid penis P on the vaginal walls;
- a wedge-shaped support 7 rotatingly associated with said capsule 4, adapted to facilitate insertion of the flaccid penis P into the capsule 4 and to support the base of the flaccid penis P to prevent it from dropping once in position, provided with a transverse seat 8, adapted to allow it to be blocked in position by means of said elastic ring 9 or the lower rim of a condom placed over the capsule 4, or other known elastic means.

With reference to the details of the figures, the use of a device to overcome erectile dysfunctions according to the invention can be summarized as described below.

The annular band 1 is positioned in the pelvic area, so as to surround the root of the scrotum and the base of the impotent flaccid penis P of the user.

Said annular band 1 is provided with reversible closing and adjustment means 2, adapted to allow it to be blocked in position without discomfort for the user, adapting to his physiological form.

Said annular band 1 is further provided with a supporting shaft 3, coupled to which is a semi-rigid capsule 4, into which the flaccid penis P of the user is inserted.

Coupling of the semi-rigid capsule 4 to the related supporting shaft 3 is made possible by a specific longitudinal seat 5, inside the capsule, adapted to reversibly house the supporting shaft in its entirety.

The metal structure of the supporting shaft 3 allows the inclination of the semi-rigid capsule 4 to be varied to facilitate insertion of the flaccid penis P of the user into it and also causes a general strengthening of the capsule, functional to its insertion into the vagina.

The window 6 of the semi-rigid capsule 4 causes exposure of the frenulum and of the front part of the prepuce of the flaccid penis P of the user, inserted into

it.

The mobile support 7 of the semi-rigid capsule 4 is rotated to be positioned at the base of the flaccid penis P of the user, inserted into it, and blocked in position through elastic means 9 cooperating with the supporting shaft 3 or lower rims of condoms placed over the capsule.

Rotation of the support 7 is made possible due to the hinge constraint produced between the support 7 and the capsule 4, due to the material and the thickness of the material with which said components are manufactured.

Blocking of the mobile support 7 of the semi-rigid capsule 4 is facilitated by a specific transverse seat 8, on the outside of the support, adapted to house said elastic means or said lower rims of said condoms.

The device arranged as described allows the user:

- a natural pelvic thrust movement, by means of the annular band 1 and the related supporting shaft 3 of the semi-rigid capsule 4 for containing the impotent flaccid sexual organ P;
- natural insertion into the vagina of the impotent flaccid sexual organ P, by means of the semi-rigid capsule 4;
- natural stimulation of the impotent flaccid sexual organ P on the vaginal walls, by means of the window 6 of the semi-rigid capsule 4 open at the frenulum and at the front part of the prepuce;
- natural continuation of sexual intercourse until the female orgasm is reached, by means of the semi-rigid capsule 4 and the mobile support 7 of the capsule, which prevents the impotent flaccid sexual organ P from dropping;
- performance of protected sexual intercourse, by means of condoms that can be placed over the semi-rigid capsule 4.

Naturally, the device can be produced in different shapes and sizes so as to adapt to the size of the male genital organ of the user and can be supplied packaged in kits of different sizes.

CLAIMS

1. Device for overcoming erectile dysfunction, characterized in that it comprises:
   - an annular band (1), adapted to be applied between the root of the scrotum and the base of an impotent flaccid penis (P);
   - a supporting shaft (3), associated with said annular band (1);
   - a capsule (4) for containing said impotent flaccid penis (P), adapted to be coupled to said supporting shaft (3),

   wherein said band (1), said shaft (3) and said capsule (4) cooperate to facilitate natural insertion into the vagina of said impotent flaccid penis (P) and consequent performance of sexual intercourse that is functional and satisfactory for both subjects.
2. Device according to claim 1, characterized in that the annular band (1) comprises reversible closing and adjustment means (2).
3. Device according to claim 1, characterized in that the capsule (4) is phallic shaped and has a semi-rigid structure.
4. Device according to claim 1, characterized in that the capsule (4) comprises a longitudinal seat (5) for coupling of the supporting shaft (3).
5. Device according to claim 1, characterized in that the capsule (4) comprises a window (6), adapted to allow stimulation of the frenulum and of the front part of the prepuce of the flaccid penis (P) on the vaginal walls.
6. Device according to claim 1, characterized in that the capsule (4) comprises a support (7) rotatingly associated with it, adapted to cooperate with the base of the flaccid penis (P) to prevent it from dropping and slipping out of the capsule.
7. Device according to claim 6, characterized in that it comprises elastic means (9) adapted to cooperate with said support (7) to block it in position.
8. Device according to claim 7, characterized in that the mobile support (7) comprises a seat (8) for housing said elastic blocking means (9).

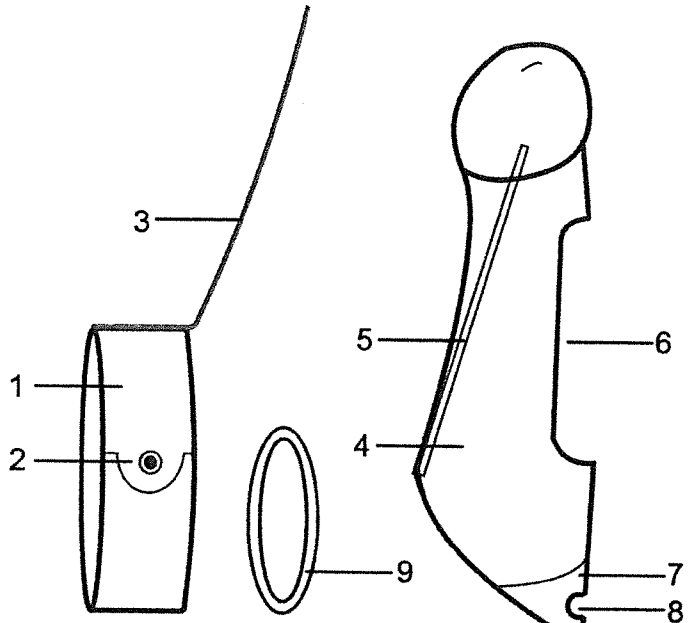

FIG. 1

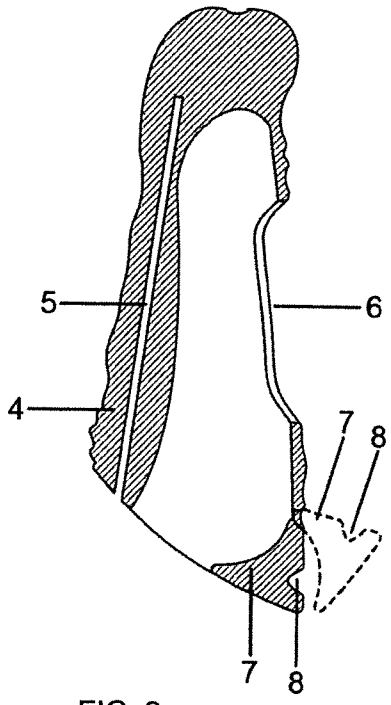

FIG. 2

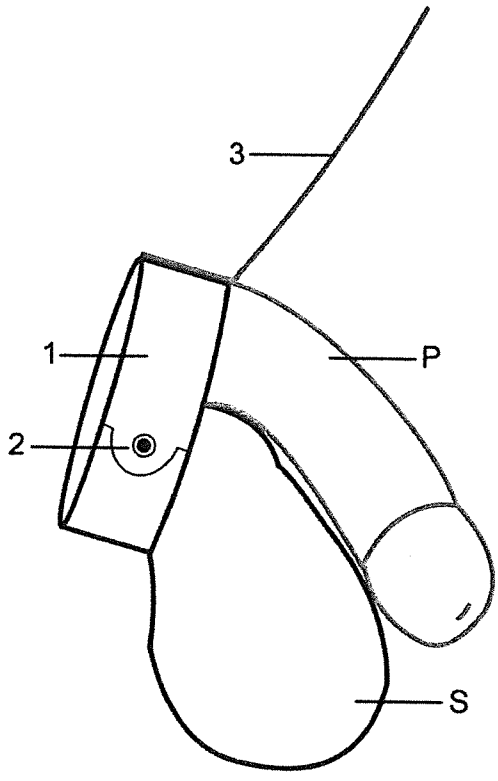

FIG. 3

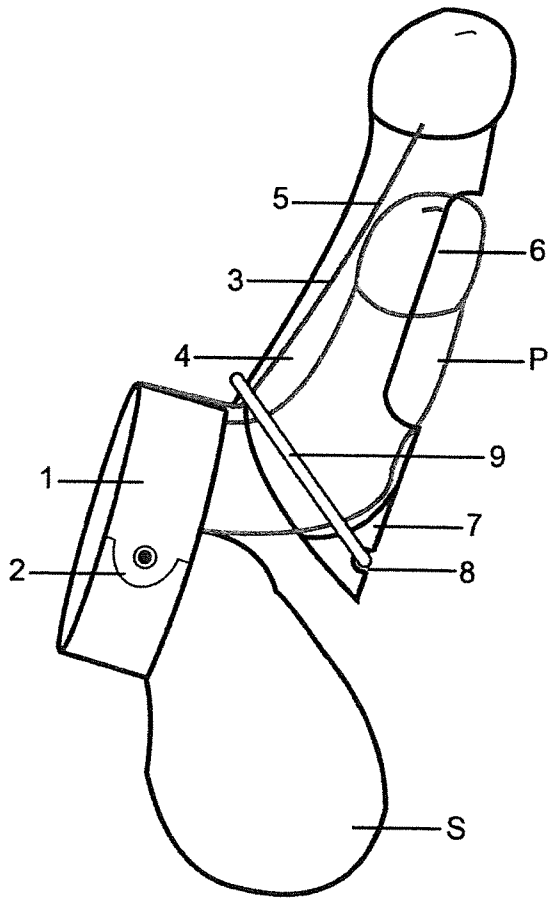

FIG. 4

INTERNATIONAL SEARCH REPORT

International application No
PCT/IT2017/000267

A. CLASSIFICATION OF SUBJECT MATTER
INV. A61F5/41 A61F6/04
ADD.

According to International Patent Classification (IPC) or to both national classification and IPC

B. FIELDS SEARCHED

Minimum documentation searched (classification system followed by classification symbols)
A61F

Documentation searched other than minimum documentation to the extent that such documents are included in the fields searched

Electronic data base consulted during the international search (name of data base and, where practicable, search terms used)
EPO-Internal, WPI Data

C. DOCUMENTS CONSIDERED TO BE RELEVANT

Category*	Citation of document, with indication, where appropriate, of the relevant passages	Relevant to claim No.
X	GB 2 259 017 A (FORD ALBERT STRANSHAM [ZA]) 3 March 1993 (1993-03-03) Figures // reference numbers 11, 12 and 13	1-8
X	US 4 429 689 A (YANONG PROCOPIO U [US]) 7 February 1984 (1984-02-07) Figures // reference numbers 22, 41 and 42	1-8
X	US 2009/069629 A1 (USON CALVO AURELIO [ES]) 12 March 2009 (2009-03-12) Figures	1

☐ Further documents are listed in the continuation of Box C.

☒ See patent family annex.

* Special categories of cited documents :

"A" document defining the general state of the art which is not considered to be of particular relevance

"E" earlier application or patent but published on or after the international filing date

"L" document which may throw doubts on priority claim(s) or which is cited to establish the publication date of another citation or other special reason (as specified)

"O" document referring to an oral disclosure, use, exhibition or other means

"P" document published prior to the international filing date but later than the priority date claimed

"T" later document published after the international filing date or priority date and not in conflict with the application but cited to understand the principle or theory underlying the invention

"X" document of particular relevance; the claimed invention cannot be considered novel or cannot be considered to involve an inventive step when the document is taken alone

"Y" document of particular relevance; the claimed invention cannot be considered to involve an inventive step when the document is combined with one or more other such documents, such combination being obvious to a person skilled in the art

"&" document member of the same patent family

Date of the actual completion of the international search	Date of mailing of the international search report
10 August 2018	20/08/2018

Name and mailing address of the ISA/	Authorized officer
European Patent Office, P.B. 5818 Patentlaan 2 NL - 2280 HV Rijswijk Tel. (+31-70) 340-2040, Fax: (+31-70) 340-3016	Foged, Søren

1

INTERNATIONAL SEARCH REPORT

Information on patent family members

International application No
PCT/IT2017/000267

Patent document cited in search report	Publication date	Patent family member(s)	Publication date
GB 2259017 A	03-03-1993	DE 9210914 U1	19-11-1992
		GB 2259017 A	03-03-1993
		JP H06205800 A	26-07-1994
		ZA 9206056 B	05-03-1993
US 4429689 A	07-02-1984	NONE	
US 2009069629 A1	12-03-2009	ES 2251885 A1	01-05-2006
		US 2009069629 A1	12-03-2009
		WO 2006048475 A1	11-05-2006