Jan. 28, 1958 D. M. McLINTOCK 2,821,195

LIQUID-DOSING INSTRUMENTS

Filed July 6, 1954 2 Sheets-Sheet 1

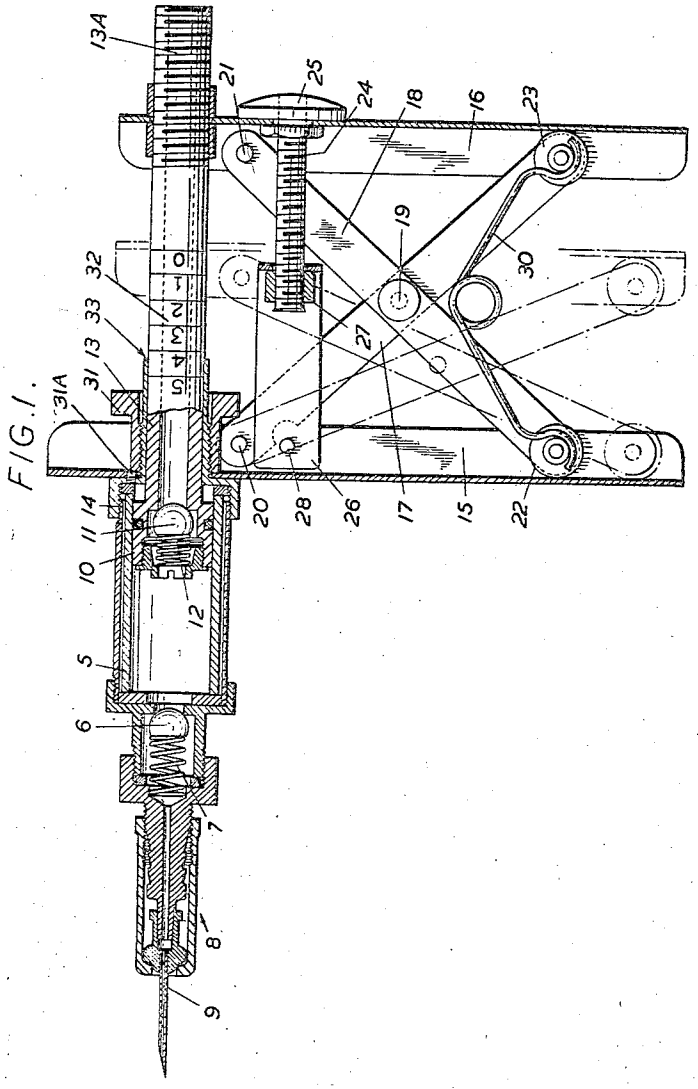


FIG. 1.

DUNCAN MENZIES McLINTOCK Inventor

By John B. Grady Attorney

Jan. 28, 1958 D. M. McLINTOCK 2,821,195

LIQUID-DOSING INSTRUMENTS

Filed July 6, 1954 2 Sheets-Sheet 2

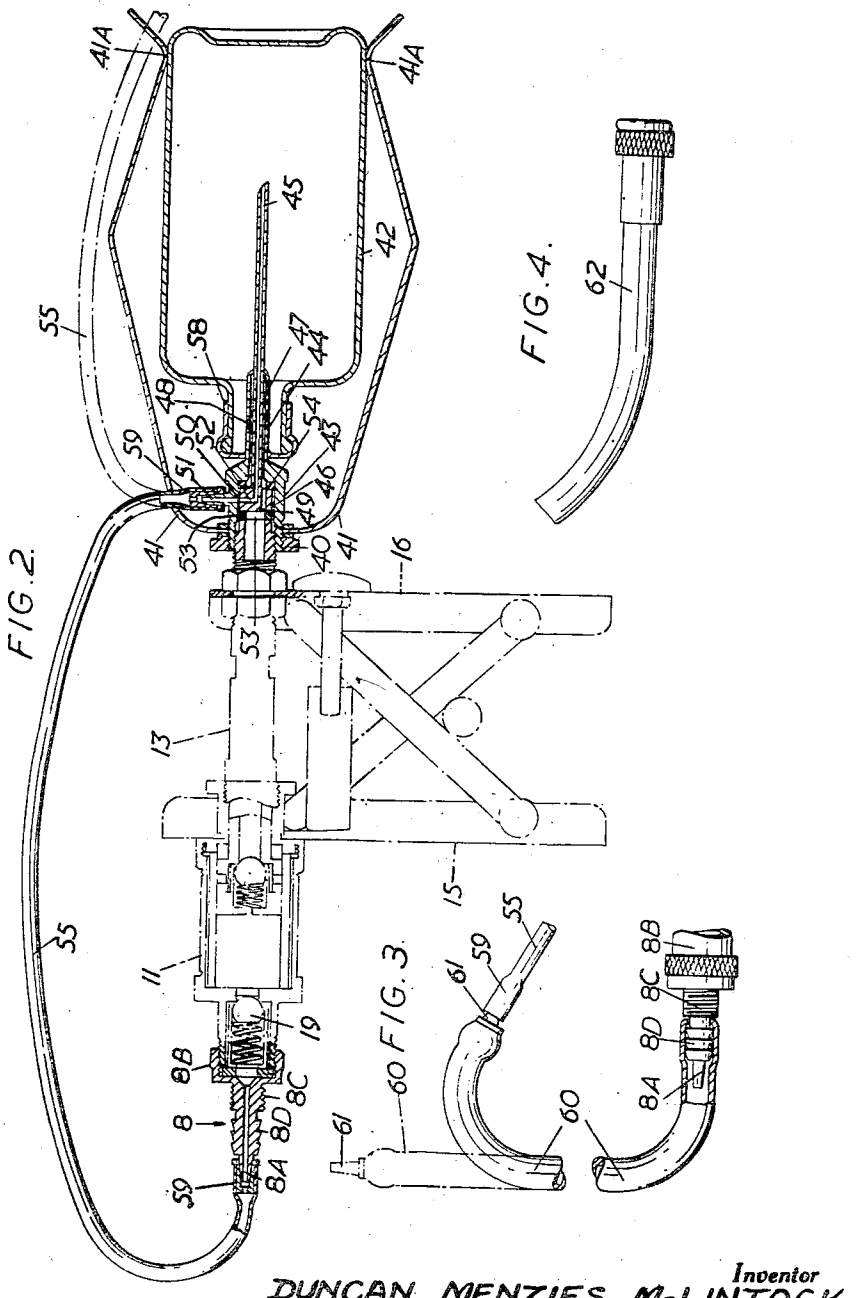


FIG. 2.

FIG. 3.




FIG. 4.

Inventor

DUNCAN MENZIES McLINTOCK

By John B. Brody Attorney

United States Patent Office 2,821,195
Patented Jan. 28, 1958



2,821,195

# LIQUID-DOSING INSTRUMENTS

Duncan M. McLintock, Prestwick, Scotland

Application July 6, 1954, Serial No. 441,501

8 Claims. (Cl. 128—218)

This invention relates to liquid dosing instruments of a kind used by veterinary surgeons and comprising a manually operated cylinder-and-plunger pump unit having a suction conduit leading from a container for the liquid to be injected and a nozzle assembly for discharging the liquid.

The present invention is a liquid dosing instrument of the kind stated characterised by a pump-operating handle incorporating a parallel linkage mechanism, which is connected between the pump cylinder and the pump plunger and which is so contrived that when the handle is manually compressed the plunger is actuated to discharge the contents of the cylinder.

The instrument is useful for veterinary dosing in general. For instance, the instrument may be adapted for injecting doses of liquids into the throats of animals, in which event the nozzle ordinarily would be a curved tube with a blunt end. The instrument also may be adapted for, say, hypodermic and intravenous injections, in which event the nozzle would be a pointed tubular needle.

In the use of such instruments hitherto, the container is connected to the instrument by a flexible tube. One end of the conduit fits upon the suction branch and a tubular needle at the opposite end is pierced through a rubber or equivalent cap on the container. The container is supported in any of various ways, notably as follows: the surgeon or an assistant holds the container; the surgeon straps the container to his body; the container is placed upon a table or other supporting platform.

The present invention also is an attachment for liquid-dosing instruments of the kind stated, the attachment comprising a gripping device consisting of a boss which has a number of resilient fingers and which is securable to the suction branch of the instrument, the fingers being adapted to grip the wall of a liquid container, a cap to which said boss is secured and which can be applied to the mouth of the suction branch, and a tubular needle projecting from the cap, being adapted to pierce the container cap as the container is being inserted in the grip of the fingers.

In use of such a liquid-dosing instrument it sometimes happens that the veterinary surgeon has to give numerous injections. At the start of each series of injections, the surgeon should be assured that there is no air in the liquid-discharge system; and to get this assurance it is customary for him to expel any air beforehand by giving the pump plunger a few initial strokes. Liquid expelled by those strokes is wasted, and as the liquid is expensive there is a proportionate loss.

Therefore, in order to make provision in an instrument such as described for expelling air from the liquid-discharge system without loss of liquid, the attachment has an air-inlet branch communicating through the air needle with the interior of the container and an external conduit temporarily connectible between the air-inlet branch and the liquid-discharge branch.



The liquid-discharge branch preferably incorporates a nozzle assembly, to and from which a hypodermic or equivalent needle can be attached and detached.

When the conduit is connected by the veterinary surgeon between the two branches and he works the pump plunger, liquid and any unwanted air are pumped from the pump cylinder through the conduit into the container. After a few strokes, the discharge system will be free from air, so that the conduit can be disconnected and the instrument made ready for immediate use.

An example of a liquid-dosing instrument according to the invention, having an attachment applied to it, will now be described with reference to the accompanying drawings, in which:

Fig. 1 is a sectional side elevation of the instrument itself.

Fig. 2 is a sectioned side elevation of the instrument and attachment, the instrument being drawn mainly in dot-dash outline.

Fig. 3 is an elevation of the liquid-discharge branch but illustrating an alternative to the arrangement according to Fig. 1.

Fig. 4 is an elevation of a so-called oral or drenching nozzle attachable to the liquid-discharge branch.

The instrument shown in Fig. 1 comprises a manually operated cylinder-and-plunger pump unit in which the discharge end of the pump cylinder **5** is fitted with a non-return ball valve **6** which is held against its valve seat by a coil spring **7** and terminates in a nozzle assembly **8** including a nozzle **9** formed as a so-caled hypodermic needle. The pump plunger has a piston portion **10** which is fitted internally with a non-return ball valve **11** also urged against its valve seat by a coil spring **12**, and a rod portion **13** which is hollow, extending through a gland nut **14** fitted to that end of the cylinder **5** which is opposite to the nozzle assembly **8**. The rod portion **13** forms the suction branch of the instrument. The plunger is constrained to rectilinear motion in relation to the cylinder **5** by the gland nut **14**, through which the portion **13** is a sliding fit, as Fig. 1 shows.

The handle by means of which the pump unit is operated includes two parallel bars **15** and **16** which normally are spaced apart at such a distance that they can be grasped by the open hand of a veterinary surgeon. Each of these bars **15** and **16** is of channel section, the channels of the two bars **15** and **16** facing one another and in effect providing a part casing in which the parallel linkage mechanism is housed. The two bars **15** and **16** extend laterally from the pump unit, so that the place where the surgeon exerts his grasp is substantially offset from the pump axis (approximately as a pistol grip is offset from the barrel axis). The inner bar **15** is secured to the gland nut **14** at one end of the pump cylinder **5**, while the outer bar **16** is secured to a screwed portion **13A** of the plunger rod **13** near its distal end. The two bars **15** and **16** constitute the parallel members of the parallel linkage mechanism of which the pump-operating means consists. The other members of this mechanism are two diagonal bars **17** and **18**, which are pivotally interconnected midway of their lengths as indicated at **19**, and which, moreover, have connections at their ends with the inner and outer bars. The diagonal bars **17** and **18**, at their ends nearer to the pump unit, have simple pivotal connections **20** and **21** with the inner and outer bars **15** and **16** respectively. The diagonal bars **17** and **18**, at their opposite ends, carry rollers **22** and **23** respectively which ride in the channel formations of the inner and outer bars **15** and **16**, so that these bars **15** and **16** form tracks for these rollers **22** and **23**. The inner and outer bars **15** and **16** are also inter-connected by a motion-limiting connection of adjustable length. This connection

comprises a turnable screw 24, which has a head 25 turnably anchored to the outer bar 16, and a yoke 26 which has a pivotal connection 28 with the inner bar 15 and through which the screw 24 passes freely. The screw 24 has a non-rotatable nut 27 which is fitted in the yoke 26 and which presses against the end thereof opposite to the pivotal connection 28.

In order to adjust the motion-limiting connection, the surgeon turns the head 25, thus rotating the screw 24 in the nut 27, with the result that the outer bar 16 is pulled closer to or pushed farther from the inner bar 16, as determined by the direction of rotation of the head.

A substantially inverted V-shaped tension spring 30 extends between the rollers 22 and 23, the ends of the spring 30 being looped around the axles of said rollers 22 and 23. The spring 30 strives to extend the mechanism so that the outer bar 16 presses against the head 25 of the screw 24 of the motion-limiting connection.

Referring to the connection between the inner bar 15 and the cylinder 5 of the pump unit, this connection includes a nut 31, which clamps the bar 15 tightly against the gland nut 14. The bar 15 is held against turning by a small grub screw 31A.

By turning the head 25 of the motion-limiting connection, the size of dose, namely the quantity of liquid pumped in one full stroke of the pump, can be regulated to an extent indicated by a scale 32 of units marked on the rod 13 of the plunger and readable against an indicator 33 projecting from the cylinder gland nut 14.

An advantage of the instrument according to the invention is that the veterinary surgeon is enabled to impart as long a stroke as is permitted by the stretch of his hand and, nevertheless, by virtue of the effective guiding and rectilinear motion-transmitting action of the parallel motion mechanism, there is no tendency whatsoever to jamming due to the offset position of his hand in relation to the axis of the pump.

Modifications in the instrument may be made. For instance, instead of having the inverted-V tension spring 30, the motion limiting mechanism may be provided with a tension spring which is housed in the channel of the inner bar 15 and which connects the pivotal connection 20 of the diagonal bar 17 to the roller end of the other diagonal bar 18, this spring serving to extend the mechanism so that the outer bar 16 presses against the head of the motion-limiting member.

With reference now to Fig. 2, the instrument is shown therein with the nozzle assembly 8 dismantled and the needle 9 removed and with an attachment added including a gripping device fitted with a liquid container. As shown, the gripping device includes an internally screw-threaded boss 40. The fingers of the device are resilient metal prongs 41, each extending from the boss 40 and each formed somewhat like a calliper limb, as Fig. 2 shows. These fingers extend outside of a horizontal-axis cylindrical container 42, turned on its side, and bear against the wall thereof near the container bottom. There are several of these fingers, say three or four, and they are equi-spaced so that they grip the container. In Fig. 2, two fingers only are seen. The gripping portions 41A of the fingers are curved to present in effect a flaring mouth, into which the container can be pressed, thus spreading the fingers apart.

The cap of the attachment is a hollow cylindrical fitting 43 upon which the boss 40 is screwed and which is internally screw-threaded and screwed upon the end of the suction branch 13A. From the cap there extends an outer sheath 44, and there is a fine hollow air needle 45 which is much longer than the sheath and extends through it. The needle 45 has, as its head, a cylindrical body 46 inserted into the cap 43. There is a fine annular space 47 between the sheath and the needle, and the sheath has a number of ports 48 for the admission of liquid from the container 42 into the annular space. There are also a number of ports 49 in the head 46 parallel to the needle axis for transmission of the liquid from the sheath 44 into the suction branch 13A. The needle head 46 is a loose fit in the cap 43, forming a fine annular space 50 between it and the cap, which space communicates with a radial-air-inlet branch 51 in the cap. The needle interior communicates with the air-inlet branch 51 by way of a radial port 52 in the head 46 communicating with the last-mentioned fine annular space 50. This space and the aforesaid annular space 47 between the needle and the sheath are effectively sealed from each other by gaskets 53, 54.

In Fig. 2 there is shown a flexible conduit 55 which connects the air inlet branch 51, with a component of the nozzle assembly 8, namely the nozzle-shaped end portion 8A of a fitting also comprising a ferrule 8B screwed on the liquid-discharge branch of the pump cylinder 5, a screw-threaded portion 8C and a corrugated portion 8D.

Let it be supposed for the present that no such tube 55 is provided. Suppose instead that there is fitted to the nozzle assembly 8 a hypodermic or other like needle 9, as shown in Fig. 1. Thus, one has a complete instrument ready for use.

When the instrument is to be used, the air needle 45 and sheath 44 are pierced through a self-sealing rubber or equivalent cap 58 on the container 42, so that both parts 44, 45 enter the interior of the container, as in Fig. 2. Therefore, it will be manifest that the attachment cap 43 provides a sealed outer passage 47, 49 for liquid from the container 42 via the sheath into the suction branch 13, and an inner passage for air from the air inlet branch 51 via the space 50, port 52 and needle 45 to the interior of the container.

It will also be manifest that the attachment comprises an assembly 40, 41, 43, 46 which is secured to the suction branch 13 of the instrument, means 41A extending from said assembly for gripping the liquid container 42, a cap 43 incorporated in said assembly, a sheath 44 projecting from said cap to extend into the container, a needle head 46 also incorporated in said assembly, being fitted inside said cap, a needle 45 projecting from said cap to extend through and beyond the sheath 44 into the container, a passage 48, 47, 49 for liquid from the container into the sheath and through the needle head to the suction branch and a passage 51, 52 for air from the cap through the needle head and the needle 45 to the container.

The surgeon can hold the instrument by the grip 15, 16 and operate it by use of one hand only, leaving his other hand free, the container 42 being a rigid extension of the instrument, which forms with the container a single unit.

As previously stated herein, with an instrument such as described with reference to Figs. 1 and 2, the surgeon would find it necessary to expel any air beforehand by giving the pump plunger a few initial strokes. It is to avoid such initial waste of liquid that the flexible conduit 55 is provided.

Referring again to Fig. 2, the flexible conduit 55 is a simple tube with union fittings 59 at its opposite ends. Moreover, the air-inlet branch 51 is formed complemental to said union fittings, so that one of them can be connected to it. The nozzle end 8A also is formed complemental to said union fittings, being adapted for connection to it of either one end of the flexible conduit 55, as Fig. 2 shows, or alternatively a hypodermic or like needle 9, as Fig. 1 shows. In order to use the flexible conduit 55, the surgeon couples one union fitting 59 to the nozzle end 8A (the needle 9, if attached thereto, being detached beforehand) and couples the other fitting 59 to the air-inlet branch 51. The surgeon operates the pump plunger sufficiently to expel any air from the pump, the expelled air and liquid passing through the conduit 55 to the container 42. Then he uncouples the conduit 55 from the nozzle end 8A, reattaching the needle 9 if this is to be used. Moreover, he attaches the now uncoupled end of the conduit 55, as indicated in Fig. 2 by dot-dash lines, to the container-gripping de-

vice in such a way that the open end of the conduit is above the level of the air needle **54** in order to keep the needle interior free of liquid.

To facilitate attachment of the conduit to the container-gripping device, the uppermost finger **41** at its end **41A** may be formed with a slot to receive and hold the appropriate union **59**.

With reference now to Fig. 3, this view illustrates how the flexible conduit **55** can be used whenever the instrument has to be used with the liquid-discharging component, whether a needle or a nozzle, attached indirectly to the liquid-discharge branch by means of another flexible conduit. As Fig. 3 shows, a flexible conduit **60** consisting of a simple tube is attached at one end to the liquid-discharge branch by being expanded over the corrugated portion **8D** of the nozzle fitting **8A—3D**. An adaptor **61** is fitted to the other end of the conduit **60**.

Preparatory to a series of injections, the surgeon detaches the open end of the flexible conduit **55** (now in its normal out-of-use position represented by dot-dash lines in Fig. 2) and couples the union **59** at that end to the adaptor **61**, as shown in full lines in Fig. 3. He now operates the pump sufficiently to expel air from the pump. Thereafter, he uncouples from the adaptor **61** the union **59** and again clips the detached union at an appropriately high level to the container **42**. The adaptor **61** is thus held free as shown in dot-dash lines in Fig. 3. In order to put the instrument into condition for immediate use, the surgeon attaches either a needle (such as the needle **9** in Fig. 1) or a nozzle to the adaptor **61**, his choice being dependent upon the nature of the injections to be given to the animals under treatment.

A nozzle **62** suitable for oral injections or drenching treatment is shown in Fig. 4. Such a nozzle may be attached to the liquid-discharge branch, either directly like the needle **9** in Fig. 1 or indirectly by means of the flexible conduit **60** in Fig. 3.

I claim:

1. A liquid dosing instrument for use by veterinary surgeons and comprising a manually operated cylinder-and-plunger pump, with a suction conduit for leading liquid to said pump, said liquid to be injected by the instrument, and a nozzle assembly for discharging the liquid, means constraining the pump plunger and pump cylinder to relative motion which is rectilinear, a pump-operating handle incorporating a pair of hand members which are connected to said plunger and cylinder respectively, a pair of diagonal links which are pivotally interconnected and which have connections with said hand members, said hand members and links together constituting a parallel linkage mechanism which effects relative rectilinear motion between the plunger and cylinder whenever said handle is manually compressed, so that a dose of the liquid from the cylinder is discharged, and a motion-limiting connection between said hand members for regulating the size of the dose to be injected.

2. A liquid dosing instrument for use by veterinary surgeons and comprising a manually operated cylinder-and-plunger pump having a suction branch to receive from a container the liquid to be injected by the instrument, a nozzle assembly connected to the pump cylinder for discharging the liquid, an attachment comprising a gripping device consisting of a boss which has a number of resilient fingers and which is secured to the suction branch, the fingers being adapted to grip the liquid container, a cap to which said boss is secured and which can be applied to the suction branch, and a tubular needle projecting from the cap, being adapted to pierce the container as the container is being inserted in the grip of the fingers.

3. A liquid dosing instrument for use by veterinary surgeons and comprising a manually operated cylinder-and-plunger pump having a suction branch to receive from a container the liquid to be injected by the instrument, an attachment comprising an assembly which is secured to the suction branch of the pump, means extending from said assembly for gripping the liquid container, a cap incorporated in said assembly, a sheath projecting from said cap to extend into the container, a needle head also incorporated in said assembly, being fitted inside said cap, a needle projecting from said cap to extend through and beyond the sheath into the container, a passage for liquid from the container into the sheath and through the needle head to the suction branch and a passage for air from the cap through the needle head and the needle to the container.

4. A liquid dosing instrument as claimed in claim 1, in which the parallel linkage mechanism is provided with a spring which is interposed between the hand members of the linkage mechanism and serves to extend the linkage mechanism by pressing said members apart to the fullest extent allowed for by the motion-limiting connection.

5. A liquid dosing instrument according to claim 2 in which the cap has a sheath projecting from it, the needle extending through and beyond this sheath, the arrangement being such that the needle interior forms an air passage leading through the cap from the exterior of the pump and the needle and sheath provide a space between them as a passage for liquid leading through the cap to the interior of the pump.

6. A liquid dosing instrument according to claim 5 in which the needle has a head that fits inside the cap, the head being ported to provide an air passage and a liquid passage both leading through the head, the air port connecting the needle interior to an air inlet on the cap and the liquid port connecting the space between the needle and sheath to the suction branch of the pump.

7. A liquid dosing instrument according to claim 3 in which a nozzle assembly is connected to the pump cylinder for discharging the liquid from the instrument and in which the attachment has an air-inlet branch communicating through the needle with the interior of the liquid container and an external conduit connected from said branch to said nozzle assembly.

8. A liquid dosing instrument according to claim 3 in which a nozzle assembly is connected to the pump cylinder for discharging the liquid from the instrument and in which the attachment has an air-inlet branch communicating through the needle with the interior of the liquid container and an external conduit connected at one end to said air-inlet branch and in which a second external conduit is connected at one end to said nozzle assembly normally for attachment to its other end of a liquid-injecting device such as a needle or nozzle and in which the other end of the first conduit is connectible to said other end of the second conduit.

**References Cited** in the file of this patent

UNITED STATES PATENTS

| | | |
|---|---|---|
| 1,933,192 | Taylor | Oct. 31, 1933 |
| 2,074,401 | Kauzal | Mar. 23, 1937 |
| 2,156,023 | McKay | Apr. 25, 1939 |
| 2,316,095 | Mead | Apr. 6, 1943 |
| 2,409,343 | Curtis | Oct. 15, 1946 |

FOREIGN PATENTS

| | | |
|---|---|---|
| 138,144 | Great Britain | Feb. 5, 1920 |
| 211,491 | Germany | July 1, 1909 |
| 509,675 | France | Nov. 17, 1920 |