May 31, 1938. F. HOGG 2,119,010

FUEL DEFLECTOR

Original Filed April 10, 1935

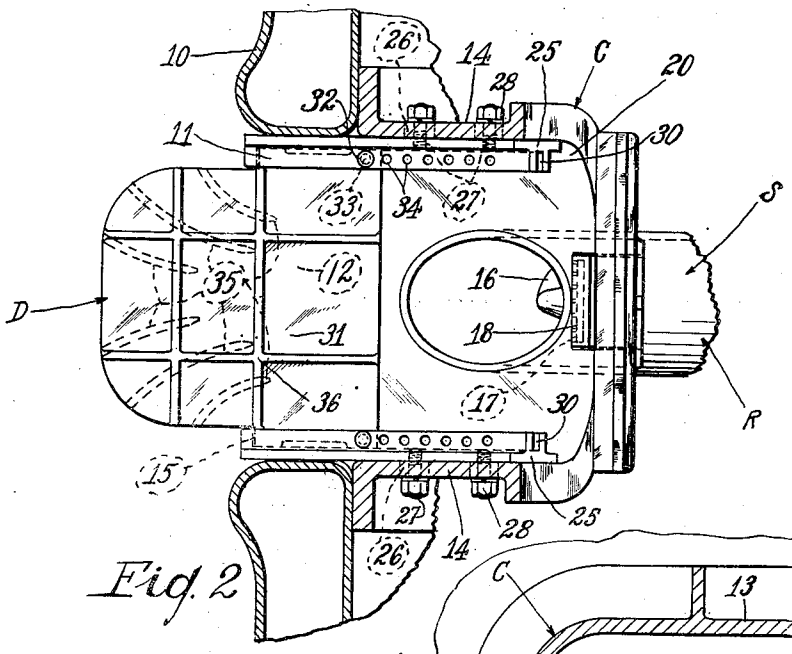

Fig. 2

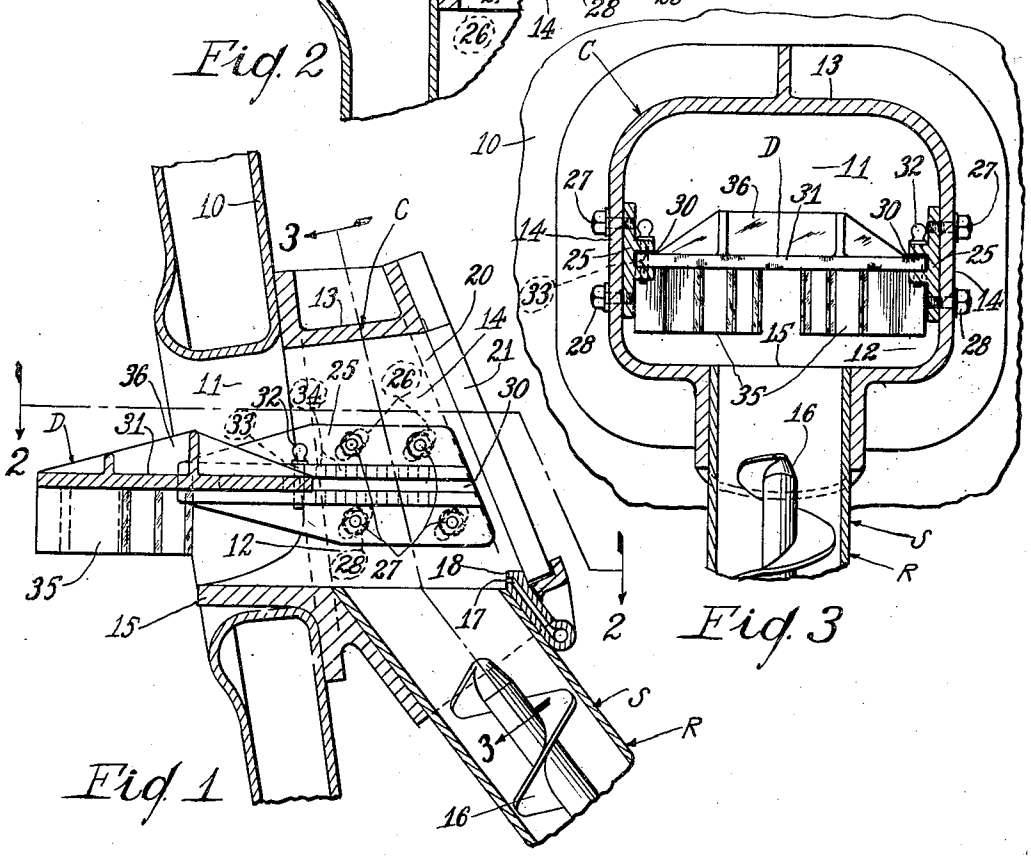

Fig. 3

Fig. 1

INVENTOR
Francis Hogg
BY
E. Archer Turner
ATTORNEY

Patented May 31, 1938

2,119,010

UNITED STATES PATENT OFFICE

2,119,010

FUEL DEFLECTOR

Francis Hogg, Wesleyville, Pa., assignor, by mesne assignments, to The Standard Stoker Company, Inc., New York, N. Y., a corporation of Delaware

Application April 10, 1935, Serial No. 15,567
Renewed July 9, 1937

9 Claims. (Cl. 110—101)

My present invention relates to fuel deflectors for stokers.

The main object is to provide a fuel deflector positioned above the projected fuel and movable bodily vertically and longitudinally with respect thereto.

On the drawing:

Fig. 1 is a longitudinal central vertical section through the rear portion of a furnace and through the delivery end portion of a stoker applied thereto and embodying the fuel deflector of the invention;

Fig. 2 is a plan sectional view of the structure of Fig. 1 taken on the line 2—2 thereof; and

Fig. 3 is a transverse vertical sectional view on the line 3—3 of Fig. 1.

Referring to these figures, 10 represents the upstanding backhead or firing wall of a furnace and 11 indicates the firing opening. Fuel is conveyed to the firing opening by the stoker S, only that portion being shown necessary to disclose the novel fuel deflector of the present invention.

The stoker S includes the fuel casing C and the inclined riser conduit R. In the construction as shown, the casing C is mounted on the firing wall 10 with the discharge outlet 12 in register with the firing opening 11. A top wall 13 and side walls 14 of the casing embrace corresponding portions of the firing opening and the flat bottom wall or floor 15 extends into the aforesaid opening directly above the bottom thereof.

The riser conduit R opens upwardly into the casing through that portion of the bottom wall or floor 15 rearward of the firing wall 10. A screw 16 advances the fuel in columnar formation through the riser conduit R into the casing C. There the fuel is projected forwardly through the discharge outlet 12 toward the furnace by pressure fluid blasts directed against the fuel and casing from jet openings 17 in a distributor head or nozzle 18 disposed in any suitable manner in the casing C rearward of and slightly above the discharge end of the riser conduit. The jet openings 17 are laterally spaced and radially directed to discharge a plurality of conical shaped pressure fluid blasts in effect merging to form a single fan shaped blast equal in width to the width of the casing at the discharge outlet 12.

An opening 20 in the rear wall of the casing C opposite the discharge outlet 12 is provided for hand firing of fuel into the pressure fluid jet or directly into the furnace and also to afford access to the interior thereof. The opening 20 may be closed by any suitable firedoor 21.

In order to deflect and spread the projected fuel over the firebed as it enters the furnace, my present invention provides an improved overhead fuel deflector D. Plate-like members 25 support the deflector D from the side walls 14 of the casing in a position in the firing opening 11 over and above the fuel projected by the pressure fluid blasts of the nozzle 18. The members 25 extend into the firing opening 11 to the inside sheet of the firing wall 10 and are placed in contact with or closely adjacent the side walls of the firing opening. Rearwardly and upwardly inclined slots 26 arranged in parallelism in the side walls 14 of the casing receive the studs 27 threaded in the members 25. By loosening or tightening the nuts 28 on the studs 27 the members 25 may be moved up or down, and also longitudinally by reason of the inclination of the slots.

Each plate-like member 25 is formed with a longitudinally extending groove 30 open at its rearward end. The grooves are positioned in the same plane and face each other to receive and form guideways for the top plate 31 of the deflector. The top plate 31 slides loosely in the grooves and extends between the members 25 to form a cover in the firing opening over and above the projected fuel and above the bottom wall or floor 15 of the casing C. Each groove 30 is closed at its forward end and that portion of the top plate 31 extending forwardly into the furnace beyond the grooves is slightly less in width than the portion extending into the grooves, thus permitting longitudinal movement in the grooves of the deflector D. The position of the deflector in the supporting members 25 may be adjusted longitudinally by changing the setting of the locking pins 32 fitting in the openings 33 and 34 in said members.

That portion of the top plate 31 extending into the furnace is provided with laterally spaced forwardly and laterally curved depending ribs 35 positioned in the path of the projected fuel to intercept and deflect the fuel to various parts of the furnace. Preferably the ribs 35 are spaced above and somewhat forward of the bottom wall or floor 15 so that a portion of the projected fuel may pass unobstructed into the furnace.

Ribs 36 on the upper side of the top plate 31 prevent warping or sagging of the deflector.

From the foregoing it is believed apparent that deflection of the fuel may be varied or changed to suit the different furnace requirements by bodily adjusting the position of the deflector D vertically and longitudinally with respect to the

projected fuel. If preferred it will be seen that the slots **26** could be disposed vertically and all of the longitudinal movement of the deflector provided for in the grooves **30**.

I claim:

1. In a stoker, a fuel discharge casing including upstanding oppositely disposed side walls and having a discharge outlet opening forwardly between said side walls and a fuel inlet opening upwardly between said side walls rearward of said discharge outlet, means delivering fuel upwardly into said casing through said fuel inlet, pressure fluid distributing means disposed at the rearward side of said fuel inlet acting against the fuel to project it from said casing through said discharge outlet, a fuel deflector above the path of the projected fuel having a portion forward of said discharge outlet disposed in the path of the projected fuel, and means supporting the fuel deflector from said side walls of the casing movable to bodily adjust the position of the deflector vertically and longitudinally with respect to the path of the projected fuel.

2. In a stoker, a fuel discharge casing including upstanding oppositely disposed side walls and having a discharge outlet opening forwardly between said side walls and a fuel inlet opening upwardly between said side walls rearward of said discharge outlet, means delivering fuel upwardly into said casing through said fuel inlet, pressure fluid distributing means disposed at the rearward side of said fuel inlet acting against the fuel to project it from said casing through said discharge outlet, a fuel deflector above the path of the projected fuel having a portion forward of said discharge outlet disposed in the path of the projected fuel, and means supporting the fuel deflector from said side walls of the casing movable to bodily adjust the position of the deflector vertically and longitudinally with respect to the path of the projected fuel, said means including a plate-like member adjustably movable longitudinally and vertically on each side wall, each plate-like member having a longitudinally extending groove open at an end to receive said deflector.

3. In a stoker, a fuel discharge casing including upstanding oppositely disposed side walls and having a discharge outlet opening forwardly between said side walls and a fuel inlet opening upwardly between said side walls rearward of said discharge outlet, means delivering fuel upwardly into said casing through said fuel inlet, pressure fluid distributing means disposed at the rearward side of said fuel inlet acting against the fuel to project it from said casing through said discharge outlet, a fuel deflector above the path of the projected fuel having a portion forward of said discharge outlet disposed in the path of the projected fuel, and means supporting the fuel deflector from said side walls of the casing movable to bodily adjust the position of the deflector vertically and longitudinally with respect to the path of the projected fuel, said means including a supporting member movable vertically on each side wall, each supporting member having a longitudinally extending groove open at an end to receive said deflector, the latter being adjustably movable lengthwise in said groove.

4. In a stoker, a fuel discharge casing including upstanding oppositely disposed side walls and having a discharge outlet opening forwardly between said side walls and a fuel inlet opening upwardly between said side walls rearward of said discharge outlet, means delivering fuel upwardly into said casing through said fuel inlet, pressure fluid distributing means disposed at the rearward side of said fuel inlet acting against the fuel to project it from said casing through said discharge outlet, a fuel deflector above the path of the projected fuel having a portion forward of said discharge outlet disposed in the path of the projected fuel, and means supporting the fuel deflector from said side walls of the casing movable to bodily adjust the position of the deflector vertically and longitudinally with respect to the path of the projected fuel, said means including a supporting member movable longitudinally and vertically on each side wall, each supporting member having a longitudinally extending groove open at an end to receive said deflector, the latter being adjustably movable lengthwise in said groove.

5. In a stoker, a fuel discharge casing including upstanding oppositely disposed side walls and having a discharge outlet opening forwardly between said side walls and a fuel inlet opening upwardly between said side walls rearward of said discharge outlet, means delivering fuel upwardly into said closing through said fuel inlet, pressure fluid distributing means disposed at the rearward side of said fuel inlet acting against the fuel to project it from said casing through said discharge outlet, a fuel deflector above the path of the projected fuel having a portion forward of said discharge outlet disposed in the path of the projected fuel, and means supporting the fuel deflector from said side walls, said means including a supporting member movable vertically on each side wall, each supporting member having a longitudinally extending groove open at an end to receive said deflector, the latter being adjustably movable lengthwise in said groove.

6. In a stoker, a fuel discharge casing including upstanding oppositely disposed side walls and having a discharge outlet opening forwardly between said side walls and a fuel inlet opening upwardly between said side walls rearward of said discharge outlet, means delivering fuel upwardly into said casing through said fuel inlet, pressure fluid distributing means disposed at the rearward side of said fuel inlet acting against the fuel to project it from said casing through said discharge outlet, a fuel deflector above the path of the projected fuel having a portion forward of said discharge outlet disposed in the path of the projected fuel, and means supporting the fuel deflector from said side walls, said means including a supporting member on each side wall, each supporting member having a longitudinally extending groove open at an end to receive said deflector, the latter being adjustably movable lengthwise in said groove.

7. In a stoker, a fuel discharge casing including upstanding oppositely disposed side walls and having a discharge outlet opening forwardly between said side walls and a fuel inlet opening upwardly between said side walls rearward of said discharge outlet, means delivering fuel upwardly into said casing through said fuel inlet, pressure fluid distributing means disposed at the rearward side of said fuel inlet acting against the fuel to project it from said casing through said discharge outlet, a fuel deflector above the path of the projected fuel having a portion forward of said discharge outlet disposed in the path of the projected fuel, and means supporting the fuel deflector from said casing, said means including a pair of supporting members each movable vertically on said casing, each supporting member

having a longitudinally extending groove open at an end to receive said deflector, the latter being adjustably movable lengthwise in said groove.

8. In a stoker, a fuel discharge casing including upstanding oppositely disposed side walls and having a discharge outlet opening forwardly between said side walls and a fuel inlet opening upwardly between said side walls rearward of said discharge outlet, means delivering fuel upwardly into said casing through said fuel inlet, pressure fluid distributing means disposed at the rearward side of said fuel inlet acting against the fuel to project it from said casing through said discharge outlet, a fuel deflector above the path of the projected fuel having a portion forward of said discharge outlet disposed in the path of the projected fuel, and means supporting the fuel deflector from said casing, said means including a pair of supporting members on said casing, each supporting member having a longitudinally extending groove open at an end to receive said deflector, the latter being adjustably movable lengthwise in said groove.

9. In a stoker, a fuel discharge casing including upstanding oppositely disposed side walls and having a discharge outlet opening forwardly between said side walls and a fuel inlet opening upwardly between said side walls rearward of said discharge outlet, means delivering fuel upwardly into said casing through said fuel inlet, pressure fluid distributing means disposed at the rearward side of said fuel inlet acting against the fuel to project it from said casing through said discharge outlet, a fuel deflector above the path of the projected fuel having a portion forward of said discharge outlet disposed in the path of the projected fuel, and means supporting the fuel deflector from said casing, said means being movable to bodily adjust the position of the deflector vertically and longitudinally with respect to the path of the projected fuel.

FRANCIS HOGG.