PCT WORLD INTELLECTUAL PROPERTY ORGANIZATION
International Bureau

INTERNATIONAL APPLICATION PUBLISHED UNDER THE PATENT COOPERATION TREATY (PCT)

(51) International Patent Classification 6 : G09F 15/00 | A1

(11) International Publication Number: WO 98/43230

(43) International Publication Date: 1 October 1998 (01.10.98)

(21) International Application Number: PCT/US98/05662

(22) International Filing Date: 20 March 1998 (20.03.98)

(30) Priority Data:
08/823,342 24 March 1997 (24.03.97) US

(71) Applicant *(for all designated States except US)*: MARKETING DISPLAYS, INC. [US/US]; 38271 W. Twelve Mile Road, Farmington Hills, MI 48331 (US).

(72) Inventor; and
(75) Inventor/Applicant *(for US only)*: GREWE, Ronald, E. [US/US]; 22437 Granbrooke Drive, Novi, MI 48375 (US).

(74) Agents: ARTZ, John, A. et al.; Lyon & Artz, Suite 250, 28333 Telegraph Road, Southfield, MI 48034 (US).

(81) Designated States: AL, AM, AT, AU, AZ, BA, BB, BG, BR, BY, CA, CH, CN, CU, CZ, DE, DK, EE, ES, FI, GB, GE, GH, GM, GW, HU, ID, IL, IS, JP, KE, KG, KP, KR, KZ, LC, LK, LR, LS, LT, LU, LV, MD, MG, MK, MN, MW, MX, NO, NZ, PL, PT, RO, RU, SD, SE, SG, SI, SK, SL, TJ, TM, TR, TT, UA, UG, US, UZ, VN, YU, ZW, European patent (AT, BE, CH, DE, DK, ES, FI, FR, GB, GR, IE, IT, LU, MC, NL, PT, SE).

Published
With international search report.
With amended claims and statement.

(54) Title: SIGN STAND WITH ROLLING BASE

(57) Abstract

A portable sign stand (10, 80) with rollers (100) and an adjustable weighted base (12, 82). The base member (12, 82) has one or more compartments (22) so that liquid or solid ballast can be added to stabilize the sign stand (10, 80) in windy conditions. Wheels (32, 100) are provided on one edge of the base member (12, 82) in order to allow the sign stand (10, 80) to be rolled and easily moved to different positions. The axle member (34, 98) for the wheels (32, 100) is held in place on the base member (12, 82) by a bracket member (42, 94) which also helps secure the sign member (14, 84) to the base member (12, 82). A pair of springs (20, 106), resilient members or the like can be used to connect the sign member (14, 84) to the base (12, 82) in order to provide a better wind–resistant sign stand (10, 80).

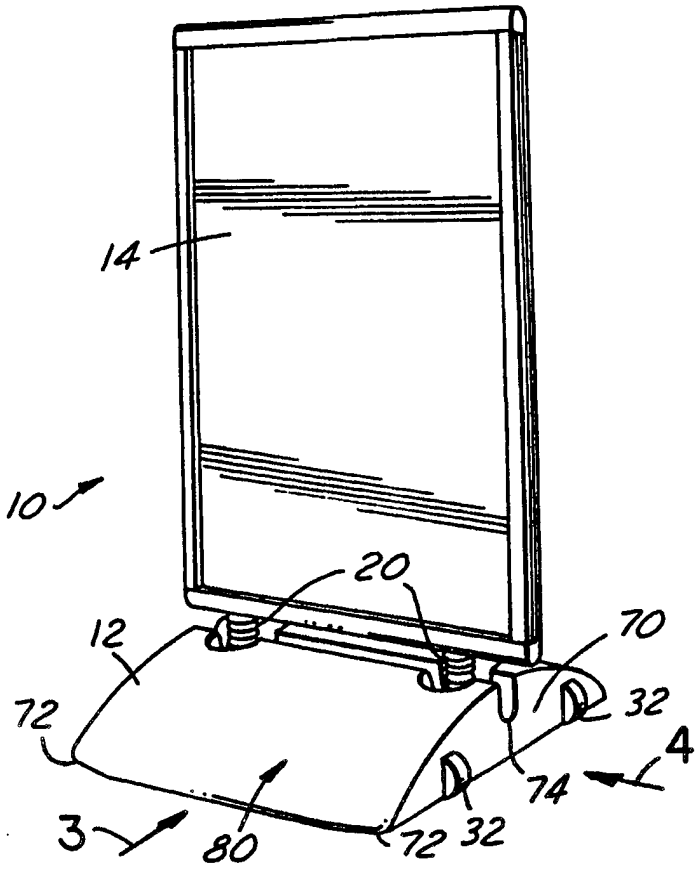

FOR THE PURPOSES OF INFORMATION ONLY

Codes used to identify States party to the PCT on the front pages of pamphlets publishing international applications under the PCT.

AL	Albania	**ES**	Spain	**LS**	Lesotho	**SI**	Slovenia
AM	Armenia	**FI**	Finland	**LT**	Lithuania	**SK**	Slovakia
AT	Austria	**FR**	France	**LU**	Luxembourg	**SN**	Senegal
AU	Australia	**GA**	Gabon	**LV**	Latvia	**SZ**	Swaziland
AZ	Azerbaijan	**GB**	United Kingdom	**MC**	Monaco	**TD**	Chad
BA	Bosnia and Herzegovina	**GE**	Georgia	**MD**	Republic of Moldova	**TG**	Togo
BB	Barbados	**GH**	Ghana	**MG**	Madagascar	**TJ**	Tajikistan
BE	Belgium	**GN**	Guinea	**MK**	The former Yugoslav Republic of Macedonia	**TM**	Turkmenistan
BF	Burkina Faso	**GR**	Greece			**TR**	Turkey
BG	Bulgaria	**HU**	Hungary	**ML**	Mali	**TT**	Trinidad and Tobago
BJ	Benin	**IE**	Ireland	**MN**	Mongolia	**UA**	Ukraine
BR	Brazil	**IL**	Israel	**MR**	Mauritania	**UG**	Uganda
BY	Belarus	**IS**	Iceland	**MW**	Malawi	**US**	United States of America
CA	Canada	**IT**	Italy	**MX**	Mexico	**UZ**	Uzbekistan
CF	Central African Republic	**JP**	Japan	**NE**	Niger	**VN**	Viet Nam
CG	Congo	**KE**	Kenya	**NL**	Netherlands	**YU**	Yugoslavia
CH	Switzerland	**KG**	Kyrgyzstan	**NO**	Norway	**ZW**	Zimbabwe
CI	Côte d'Ivoire	**KP**	Democratic People's Republic of Korea	**NZ**	New Zealand		
CM	Cameroon			**PL**	Poland		
CN	China	**KR**	Republic of Korea	**PT**	Portugal		
CU	Cuba	**KZ**	Kazakstan	**RO**	Romania		
CZ	Czech Republic	**LC**	Saint Lucia	**RU**	Russian Federation		
DE	Germany	**LI**	Liechtenstein	**SD**	Sudan		
DK	Denmark	**LK**	Sri Lanka	**SE**	Sweden		
EE	Estonia	**LR**	Liberia	**SG**	Singapore		

SIGN STAND WITH ROLLING BASE

Cross-Reference to Related Application

This is a continuation-in-part of United States patent application Serial No. 08/740,329 filed on October 28, 1996.

Technical Field

The present invention relates to portable sign stands which have a rolling base.

Background Of The Invention

Signs and sign stands are used for a variety of different purposes today with virtually all types of businesses. For example, signs and sign stands of various types are used for point of purchase displays, either interior or exterior to the establishment. Signs and sign stands are also used by the traffic control and safety industry to provide notice and/or warnings to passing pedestrians and motorists.

Many of the sign stands in use today are spring-mounted wind-resistant sign stands. Some of these are shown, for example, in U.S. Patent Nos. 3,646,696, 3,662,482, 4,288,053, and 4,548,379. There also are numerous sign stands in use today which use T-shaped legs or weighted bases in order to keep them in place. Where weighted bases are used, it is often difficult to provide appropriate size and weight base in

order to provide the best wind-resistance and yet, at the same time, allow the sign stands to be portable.

It is an object of the present invention to provide an improved sign stand which has a weighted base and is readily portable. It is also an object of the present invention to have a sign stand which has wheels or rollers for ease of placement and movement.

It is a further object of the present invention to provide a portable sign stand in which the weight of the base can be adjusted easily. It is still another object of the present invention to provide a portable sign stand which has a base member with a cavity therein so the cavity can be filled with a liquid or solid material in order to hold the sign stand in place and yet be emptied in order to allow the sign stand to be easily moved and stored.

These and other objects, and purposes of the present invention will become apparent from the following summary and descriptions of the invention.

Summary Of The Invention

The invention provides a portable sign stand with a base which can have the weight adjusted. The base has one or more compartments or cavities with inlet ports or openings in order to allow the compartments or cavities to be filled or emptied. Preferably, except for one or more sealed inlet/outlet ports, the base does not have any openings or joints which could cause leakage problems. A sign or sign stand, particularly a

spring-mounted wind-resistant sign stand, is mounted to the base member.

One or more wheels or rollers are provided in one of the sides of the base member to allow the base member and sign stand to be easily moved from one position to another.

These and other features, benefits and advantages of the present invention will become apparent from the following description of the invention, when viewed in accordance with the attached drawings and appended claims.

Brief Description Of The Drawings

FIGURE 1 illustrates a preferred embodiment of the present invention;

FIGURE 2 is an exploded view of the embodiment illustrated in Figure 1;

FIGURE 3 is a side view of the embodiment of the base member shown in Figure 1, with some of the parts broken away;

FIGURE 4 is an end view of the embodiment of the base member shown in Figure 1, with some of the parts broken away;

FIGURE 5 is a cross-sectional view taken along lines 5-5 in Figure 3 and in the direction of the arrows;

FIGURE 6 is a partial top view of the base member;

FIGURE 7 depicts a preferred embodiment of the invention in a position to be filled with ballast;

FIGURE 8 illustrates the manner in which the invention can be moved from one position to another;

FIGURE 9 illustrates an alternate embodiment of the invention; and

FIGURE 10 is a cross-sectional view taken along lines 10-10 in Figure 9 and in the direction of the arrows.

Best Mode(s) Of The Invention

The present invention is referred to generally by the numeral 10 in the drawings. The invention comprises a sign and sign stand apparatus having a weighted base member in which the weight can be adjusted and which has roller members in order to allow the sign stand to be easily moved from one position to another.

The sign stand 10 includes a base member 12 and an upright sign member 14. The sign member 14 is connected to the base member 12 by a pair of coil springs 20. Although the invention 10 is shown in the preferred embodiment utilizing a pair of coil springs 20 connecting the sign member 14 to the base member 12, it is also understood that the sign member can be connected to the base member in any conventional manner. In this regard, the connection means can provide a wind-resis-

tant mounting, or the sign member can be connected solidly to the base member without allowing a provision for wind resistance.

Sign stands connected to base members with one or more spring members are disclosed, for example, in U.S. Patent Nos. 3,646,696, 3,662,482, and 4,288,053, the disclosures of which are hereby incorporated by reference. Sign stands of this type are sold under the trademark WINDMASTER™ by Marketing Displays, Inc., Farmington Hills, Michigan.

The base member 12 is preferably molded from a plastic material, such as polyethylene, polypropylene, or the like, although other equivalent materials which could fulfill the purposes and objects of the present invention could be utilized. The inside of the base member has one or more compartments or hollow chambers 22. One or more openings 24 are utilized to communicate with each of the chambers 22 so that they can be filled with a liquid or solid material, such as water, sand, or other ballast.

Although the base could be molded in two or more pieces and joined together, or molded in one piece with a plurality of openings or holes later machined into it, it is preferred that the base be molded in the size and configuration shown by rotational molding techniques. In this manner, openings or joints are unnecessary and the base can be provided without potential ballast leakage sites. Thus, in accordance with the preferred embodiment of the invention, the base has only one or more inlet/outlet ports for filling/emptying of the internal cavity or cavities, and these ports can

be readily sealed with an appropriate plug and situated at a position where leakage is not a concern.

A single or multiple hollow portions or chambers can be provided in the interior of the base member 12. In this regard, if more than one chamber is provided, then it is preferred that each chamber have at least one opening 24 allowing access to the volume of each chamber. Also, there can be two or more ports or openings in each of the chambers for ease of filling and emptying, if desired.

Figures 3 and 4 illustrate cross-sectional views of a base member 12 which has one interior chamber 22.

A plug member 26 of any conventional type, preferably made of plastic or an elastomeric/rubber material, is provided to removably seal the opening 24.

When it is desired to fill the chambers in the base member with ballast, the sign stand 10 is preferably tipped over and positioned on its side, as shown in Figure 6. In this manner, liquid such as water from a hose 28 can be introduced into the chamber through opening 24. Plug member 26 plugs the opening after the base member is filled with ballast.

When it is desired to empty the base member 12, the sign stand 10 can be tipped over in the opposite manner to that shown in Figure 7 so that the opening 24 is near the ground. This allows the liquid or solid ballast in the base member to flow out of opening 24.

As shown in Figure 2, a pair of wheels 32 are connected to axle member 34 and positioned on the bottom of the base member 12. The wheels fit within molded recesses 36 in the base member. The axle is positioned in a slot or channel 40 in the base member and the axle member 34 is held in place by bracket member 42.

The coil spring members 20 are connected to the sign stand 14 in any conventional manner. As shown in the drawings, the spring members 20 are preferably connected to the base member 12 by bracket member 44 which is positioned in a channel 46 in the base member. The bracket members 42 and 44 are secured together on opposite sides of the base member 12 by a plurality of fasteners 50. The fasteners 50 can be of any conventional type, such as machine bolts as shown in Figure 2. Washers 52 and nuts 54 are used to secure the fasteners 50 to the two plate members. The fasteners 50 are positioned in molded openings 60 in the base member 12.

In accordance with the preferred embodiment of the invention, it is unnecessary to drill holes in the base for the axle or bracket fasteners. The axle fits within an elongated molded recess and the fasteners are positioned in molded openings which provide sealed passageways through the base.

As shown, the bracket member 42 helps secure the sign stand 14 to the base member 12, and also holds the axle 34 and wheels 32 in place on the base member.

A pair of enlarged wells or openings 62 are also incorporated in the base member 12 and communicate with the central channel 46. The enlarged openings 62

allow for bending of the spring members 20 when the sign stand 14 is deflected by wind forces. This deflection is shown, for example, in hidden lines 201 in Figure 5.

The wheels 32 are positioned on a side 70 of the base member and used to accommodate tipping of the sign stand 10 so it can be moved to other positions. The sign stand could be moved, for example, indoor for security or from one position to another merely for convenience. As shown in Figure 7, in order to allow the sign stand 10 to be moved, the sign stand 10 is tipped slightly so that the wheel members 32 are fully engaged with the ground surface. In this position, as shown in Figure 7, the sign stand can be moved in any direction.

Preferably, the corners 72 of the base member are angled or radiused as shown in the drawings in order to provide clearance for the base member to be tipped in the manner shown in Figure 7. Although it is only necessary in this regard to angle the two corner members adjacent the wheels 32, it is preferred for aesthetic reasons to also angle the other two corners of the base member.

The channel 46 is preferably open at both ends 74 of the base member in order to allow drainage of water, snow or the like from the channel if the sign stand 10 is used outdoors.

Although the bracket member 44 and thus the connection between the springs 20 and the base member 12 is positioned in the channel member 46 several inches below the upper surface 76 of the base member, it is

also understood that the sign member 14 could be connected in other manners to the upper surface 76 of the base member. However, providing the connection between the springs and the base member in a lower portion of a channel creates a lower center of gravity for the sign stand 10. A lower center of gravity makes the sign stand more stable in windy conditions.

Preferably, in accordance with the present invention, the hollow portions or chambers in the base member hold between five and ten gallons of liquid material or ballast. The weight of the material in containers or chambers of that size is believed to provide satisfactory stability in windy conditions for the sign stand.

The base member 12 can have any exterior size or shape, although the size and shape of the base member shown in the drawings is preferred at this time. In this regard, a base member of the type shown in the drawings also can have one or more surfaces 80 which could be used for advertising members or messages. The advertisements could be decals, inserts, embossing, or the like.

An alternate embodiment of the present invention is shown in Figures 9 and 10. The sign stand 80 has a base member 82 and a sign member 84. The sign member 84 includes a sign panel 86 and an upright member 88. The sign member 84 can be attached to the upright member in any conventional manner, and can be a rigid or roll-up sign, both of which are commonly known and utilized in the traffic control sign stand field.

The upright member is connected to a bracket member 90 which is positioned in a well or recess 92 in the top of the base member 82. A second bracket member 94 is positioned in another recess 96 in the bottom of the base member. Similar to bracket member 42 described above with respect to Figures 1-8, the bracket member 96 holds axle 98 and wheels 100 in place on the base member.

The two brackets 90 and 94, in combination with threaded rods 102 and fasteners (e.g. nuts) 104, secure the sign member 84 to the base. Resilient members 106 are positioned on the rods 102 below the bracket member 94. The resilient members 106 can be compression coil springs (as shown) or can be made from any other type of resilient material, such as an elastomeric material. The connection of the sign member to the base member 82 below its upper surface maintains a low center of gravity for the sign stand 80 and helps its stability in windy conditions. Also, the entire base member 82 due to its structure and material construction acts as a resilient biasing mechanism which accommodates bending of the upright member 88 relative to the ground and assists in returning the upright member to its normal vertically upright position. (The plastic material flexes like a leaf spring.) The addition of compression springs or resilient members 106 assists in allowing the upright member 88 to bend from and return to its normal upright (rest) position. The springs 106 also help stabilize the plastic structure and hold the sign member upright in windless conditions.

The base member 82 is hollow and has one or more chambers which can be filled with water or another

ballast material. One or more holes covered by plug members 110 are used to fill the base with ballast.

A handle member 112 is preferably provided at one side of the base member, preferably opposite the wheels 100. The handle member is used to manually lift, tilt or move the base member and sign stand for adding ballast, removing or emptying the ballast, or simply transporting the sign stand to another position.

While the best modes for carrying out the invention have been described in detail, those familiar with the art to which this invention relates will recognize various alternative designs and embodiments for practicing the invention as defined by the following claims.

What Is Claimed Is:

1. A sign stand apparatus comprising a base member and an upright sign member connected thereto, the base member having at least one compartment therein for holding ballast, at least one inlet port in communication with each of said compartments, and roller members positioned on at least one edge of said base member.

2. The apparatus of claim 1 further comprising at least one resilient member connecting said base member to said upright sign member.

3. The apparatus of claim 2 wherein said resilient members comprise coil springs and two spaced apart coil springs are provided.

4. The apparatus of claim 1 wherein said roller members comprise a pair of wheels, and further comprising an axle member positioned between said wheels.

5. The apparatus of claim 4 further comprising a bracket member connected to said base member and securing said axle member in position.

6. The apparatus of claim 5 further comprising at least one resilient member positioned on a first side of said bracket member, and wherein said upright sign member is positioned on the opposite side of said bracket member.

AMENDED CLAIMS
[received by the International Bureau on 17 August 1998 (17.08.98); original claims 1-6 replaced by new claims 1-31 (12 pages)]

1. A portable sign device comprising:

a base member comprising a molded housing and having a hollow cavity, a lower surface and an upper surface;

an upright sign member positioned on said upper surface and having a first bracket member thereon;

a pair of wheel members connected together by an axle member, said wheel members being positioned on said lower surface;

a second bracket member positioned on said lower surface and securing said axle member to said housing;

at least one fastener member, said at least one fastener member extending entirely through said housing from said lower surface to said upper surface and connected to said first bracket member on said upper surface and to said second bracket member on said lower surface; and

a recess in said upper surface and wherein said sign member is positioned in said recess.

2. The portable sign device of claim 1 wherein said sign member comprises a sign display member and a resilient mechanism, said resilient mechanism attached to said first bracket member.

3. The portable sign device of claim 2 wherein said resilient mechanism comprises a pair of coil spring members.

4. The portable sign device of claim 1 wherein said base member comprises a one-piece leakproof molded housing, said base member also having at least one leakproof channel member extending through said hollow cavity from said lower surface to said upper surface, and wherein said at least one fastener member is positioned in said channel member.

5. The portable sign device of claim 4 wherein two of said leakproof channel members and two of said fastener members are provided, said two fastener members being positioned in said two channel members, and

wherein said two fastener members are each connected to said first bracket member on said upper surface and to said second bracket member on said lower surface.

6. The portable sign device of claim 1 wherein said sign member comprises a sign display member and at least one resilient member.

7. The portable sign device of claim 1 wherein two of said fastener members are provided, each of said fastener members connected to said first bracket member on said upper surface and to said second bracket member on said lower surface.

8. The portable sign device of claim 1 wherein said base member is substantially rectangular in shape and has at least one angled corner, wherein tipping of said base member can be accomplished more easily.

9. The portable sign device of claim 1 further comprising a recess in said lower surface and wherein said wheel members are positioned in said recess.

10. The portable sign device of claim 1 wherein said second bracket member secures said axle member and wheel members to said base member and at the same time in combination with said at least one fastener member securely holds said sign member to said base member.

11. The portable sign device of claim 1 wherein said base member has at least one opening therein for selective addition of a ballast in order to add stabilizing weight to said sign device.

12. A portable sign device comprising:

a base member comprising a molded housing with a hollow cavity and having a lower surface and an upper surface;

an upright sign member positioned on said upper surface and having a first bracket member thereon;

a pair of wheel members connected together by an axle member, said wheel members being positioned on said lower surface;

a second bracket member positioned on said lower surface and securing said axle member to said housing;

at least one fastener member, said at least one fastener member extending entirely through said housing from said lower surface to said upper surface and connected to said first bracket member on said upper surface and to said second bracket member on said lower surface; and

said sign member comprising a sign display member and a resilient mechanism, said resilient mechanism attached to said first bracket member and comprising a pair of coil spring members.

13. A portable sign device comprising:

a base member comprising a molded housing with a hollow cavity and having a lower surface and an upper surface;

an upright sign member positioned on said upper surface and having a first bracket member thereon;

a pair of wheel members connected together by an axle member, said wheel members being positioned on said lower surface;

a second bracket member positioned on said lower surface and securing said axle member to said housing;

at least one fastener member, said at least one fastener member extending entirely through said housing from said lower surface to said upper surface and connected to said first bracket member on said upper surface and to said second bracket member on said lower surface; and

at least one spring member positioned between said sign member and said base member, wherein said sign member can deflect relative to said base member.

14. The portable sign device of claim 13 further comprising a recess in said upper surface and wherein said sign member is positioned in said recess.

15. The portable sign device of claim 13 wherein two of said spring members are provided.

16. The portable sign device of claim 13 wherein said spring member comprises a coil spring member.

add stabilizing weight to said sign device.

17. A portable sign device comprising:

a base member comprising a one-piece leakproof molded housing with a hollow cavity therein and having a lower surface and an upper surface;

an upright sign member positioned on said upper surface and having a first bracket member thereon;

a pair of wheel members connected together by an axle member, said wheel members being positioned on said lower surface;

a second bracket member positioned on said lower surface and securing said axle member to said housing;

at least one leakproof channel member extending through said hollow cavity from said lower surface to said upper surface, and

at least one fastener member, said at least one fastener member being positioned in said at least one leakproof channel member and extending entirely through said hollow cavity from said lower surface to said upper surface and connected to said first bracket member on said upper surface and to said second bracket member on said lower surface.

18. The portable sign device of claim 17 further comprising a recess in said upper surface and wherein said sign member is positioned in said recess.

19. The portable sign device of claim 17 wherein said sign member comprises a sign display member and a resilient mechanism, said resilient mechanism attached to said first bracket member.

20. The portable sign device of claim 19 wherein said resilient mechanism comprises a pair of coil spring members.

21. The portable sign device of claim 17 wherein two of said fastener members are provided, each of said fastener members connected to said first bracket member on said upper surface and to said second bracket member on said lower surface.

22. The portable sign device of claim 17 further comprising at least one spring member positioned between said sign member and said base member, wherein said sign member can deflect relative to said base member.

23. A sign stand apparatus comprising a base member and an upright sign member connected thereto, the base member having at least one compartment therein for holding ballast, at least one inlet port in communication with said at least one compartment, a pair of wheels positioned on at least one edge of said base member, an axle member positioned between said wheels, a bracket mechanism connected to said base member and securing said axle member in position, and at least one resilient member positioned on a first side of said bracket mechanism, and wherein said upright sign member is positioned on a second side of said bracket mechanism.

24. The apparatus of claim 23 wherein said resilient member comprises a coil spring member.

25. The apparatus of claim 24 wherein two of said resilient members are provided, each comprising a coil spring member.

26. A portable sign device comprising:

a base member comprising a molded housing and having a hollow cavity therein for holding ballast, a lower surface and an upper surface;

an upright sign member positioned on said upper surface and having a first bracket member thereon;

a pair of wheel members connected together by an axle member, said wheel members being positioned on said lower surface;

a second bracket member positioned on said lower surface and securing said axle member to said housing; and

said sign member comprising a sign display member and a resilient mechanism, said sign member positioned on said first bracket member and said resilient mechanism positioned on said second bracket member.

27. The portable sign device of claim 26 wherein said resilient mechanism comprises a pair of coil spring members.

28. The portable sign device of claim 26 further comprising at least one fastener member connected to said first bracket member on said upper surface and to said second bracket member on said lower surface.

29. The portable sign device of claim 26 wherein said base member is substantially rectangular in shape and has at least one angled corner, wherein tipping of said base member can be accomplished more easily.

30. The portable sign device of claim 26 wherein said base member has at least one opening therein for selective addition of ballast into said cavity in order to add stabilizing weight to said sign device.

31. A portable sign device comprising:

a base member comprising a molded housing with a hollow cavity and having a lower surface and an upper

surface;

an upright sign member positioned on said upper surface and having a first bracket member thereon;

a pair of wheel members connected together by an axle member, said wheel members being positioned on said lower surface;

a second bracket member positioned on said lower surface and securing said axle member to said housing;

at least one fastener member, said at least one fastener member extending entirely through said housing from said lower surface to said upper surface and connected to said first bracket member on said upper surface and to said second bracket member on said lower surface; and

said sign member comprising a sign display member and a resilient mechanism, said sign display member positioned on and attached to said first bracket member and said resilient mechanism positioned on and attached to said second bracket member and comprising a pair of coil spring members.

Statement Under Article 19

Applicant hereby replaces the claims of the International Application to coincide with the claims in the pending United States patent application. Specifically, claims 1-6 have been replaced with a new set of claims (replacement pages 12-23).

It is respectfully submitted that the application as amended is in condition for subsequent processing.

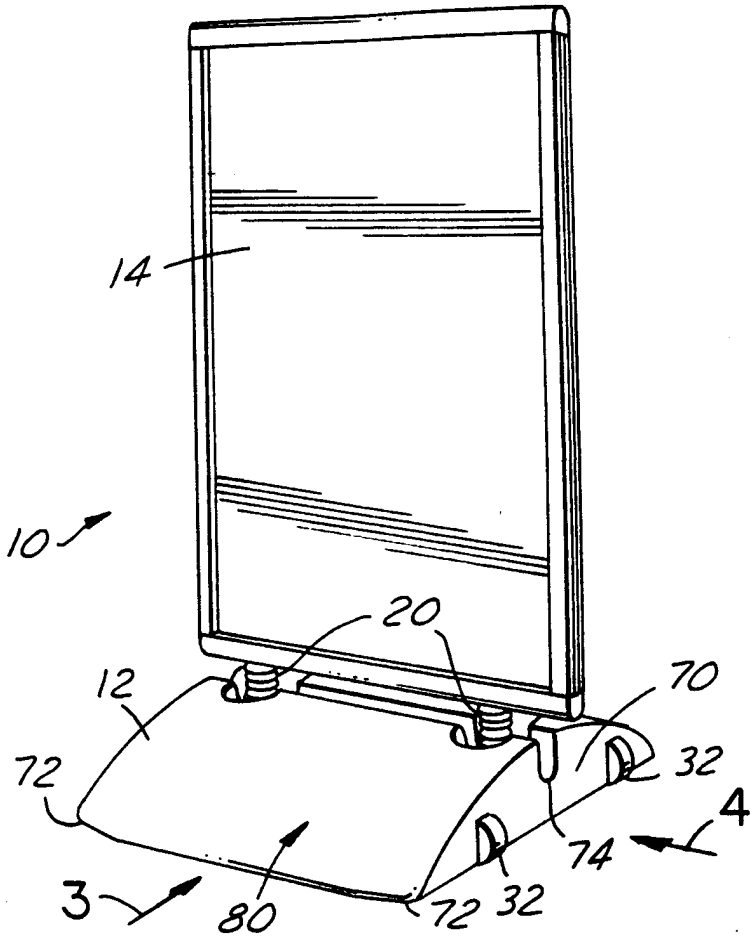
14
10
20
12
70
72
32
4
74
3
80
72
32

FIG.1

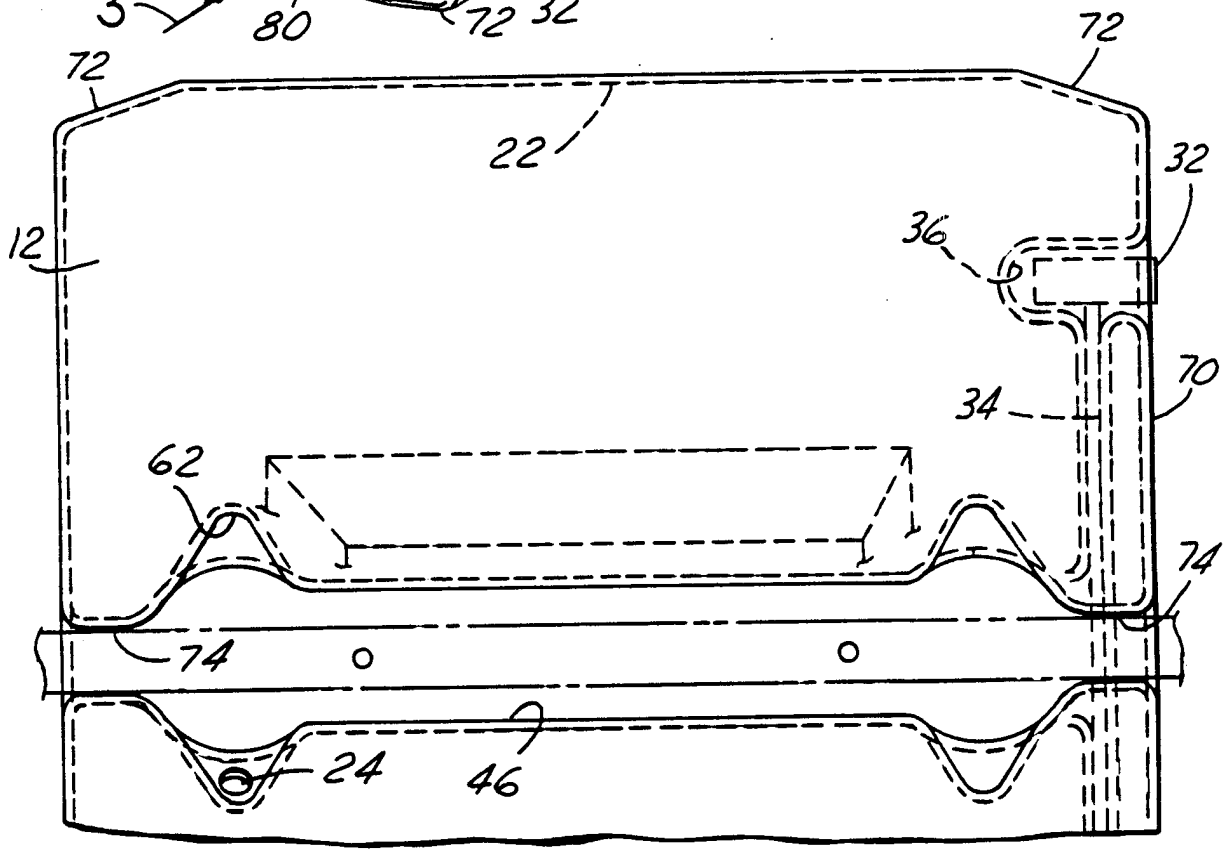
72
72
22
32
12
36
70
34
62
74
74
24
46

FIG.6

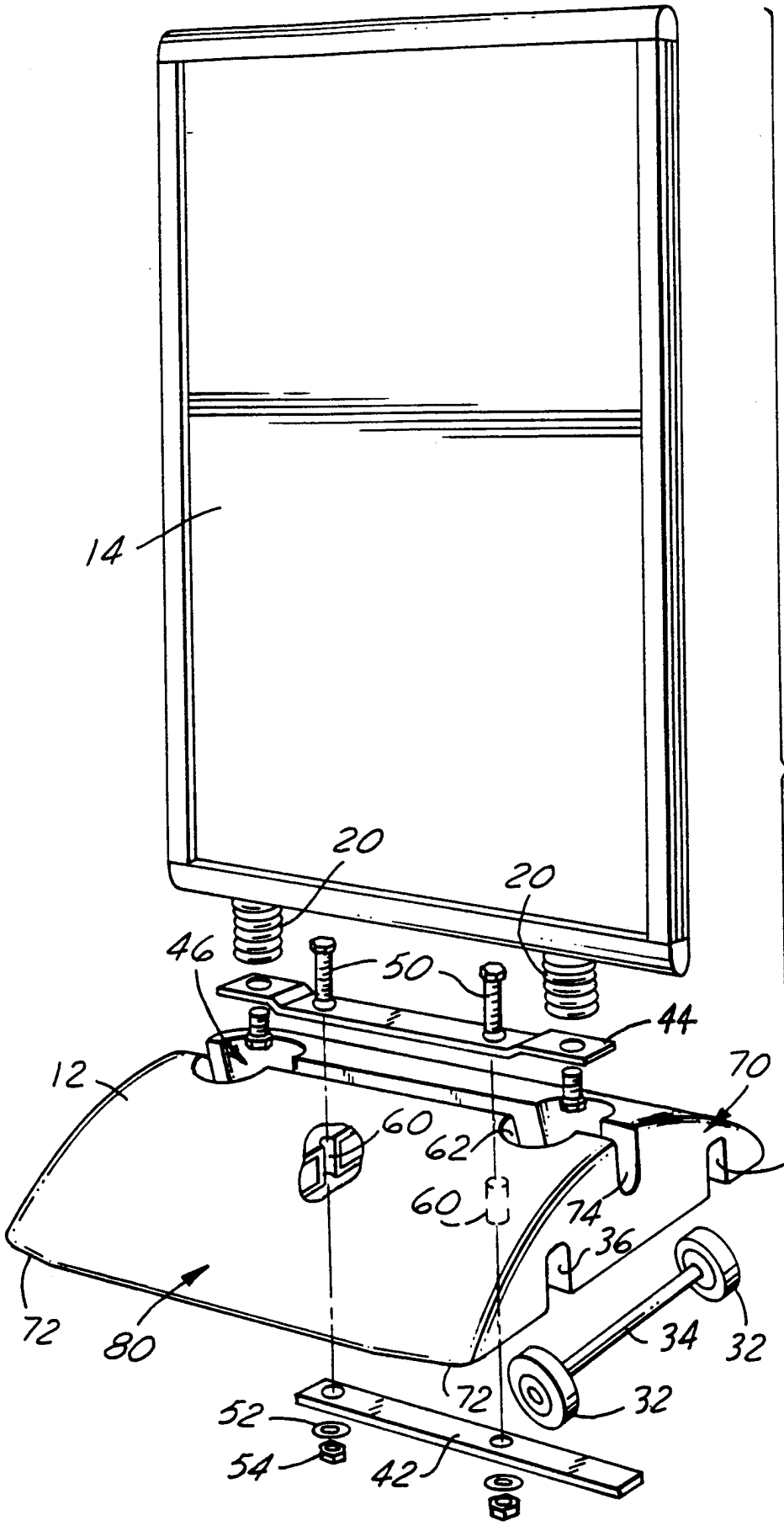

FIG.2

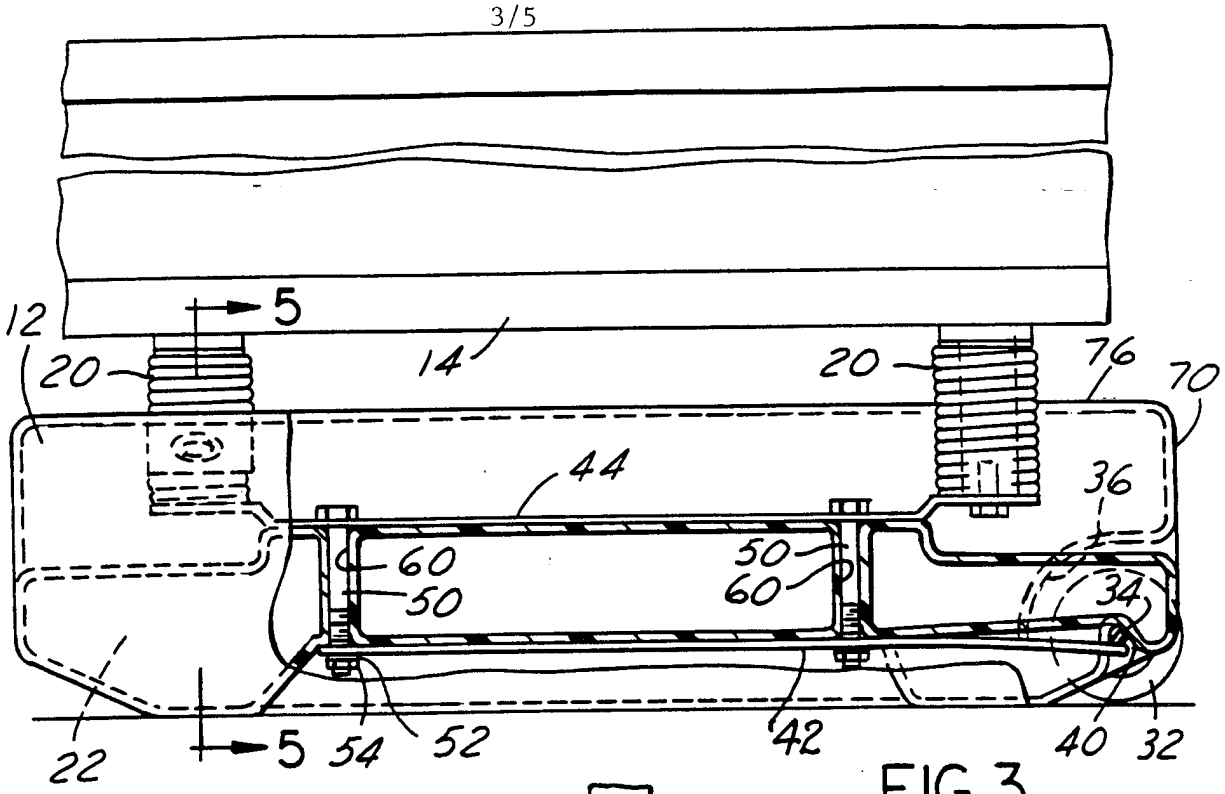

FIG.3

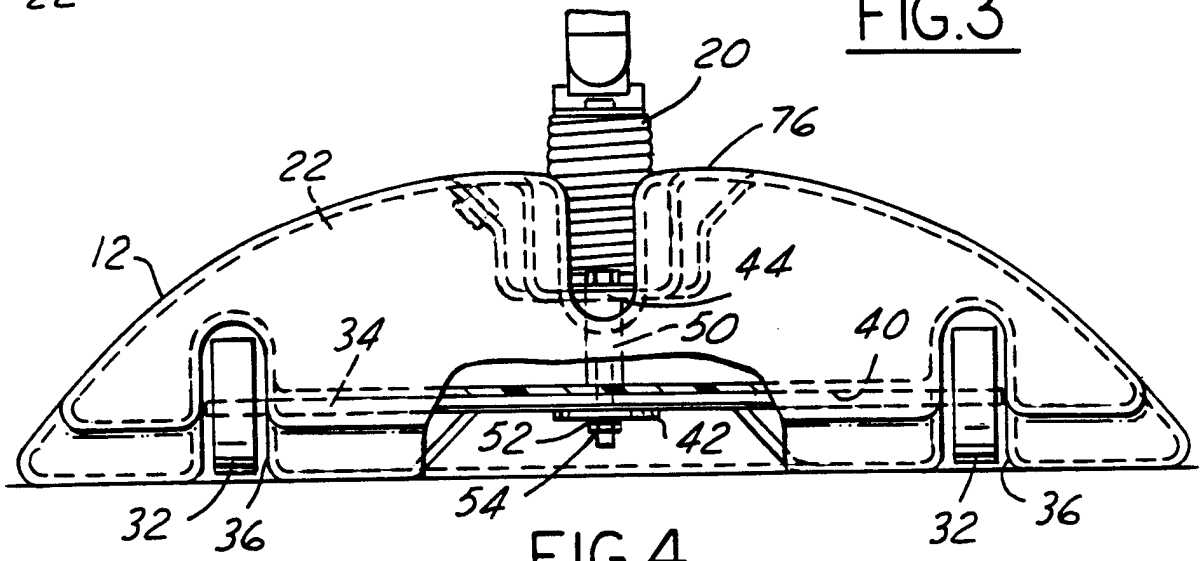

FIG.4

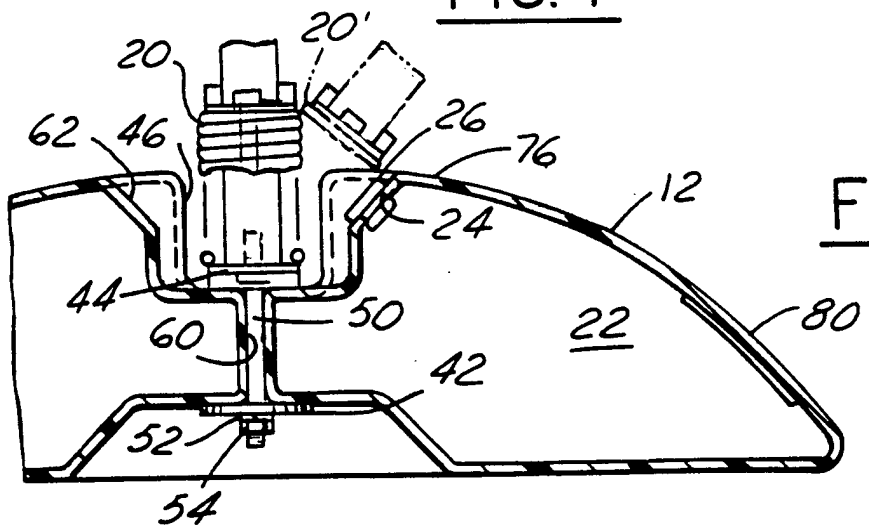

FIG.5

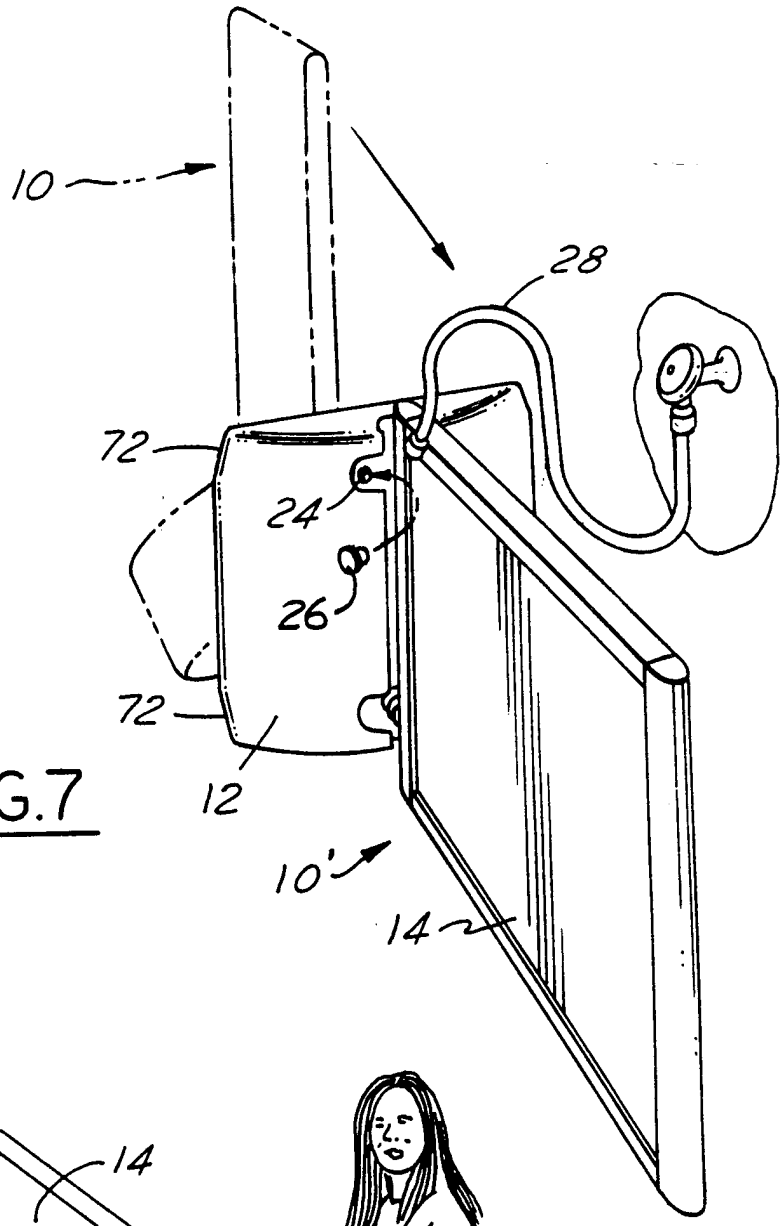

FIG.7

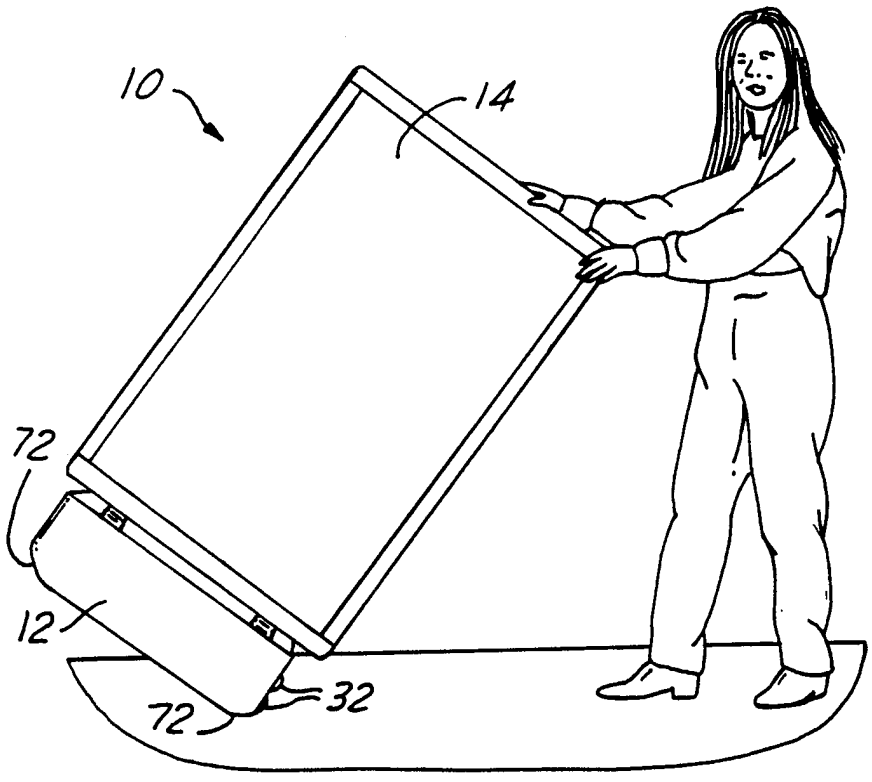

FIG.8

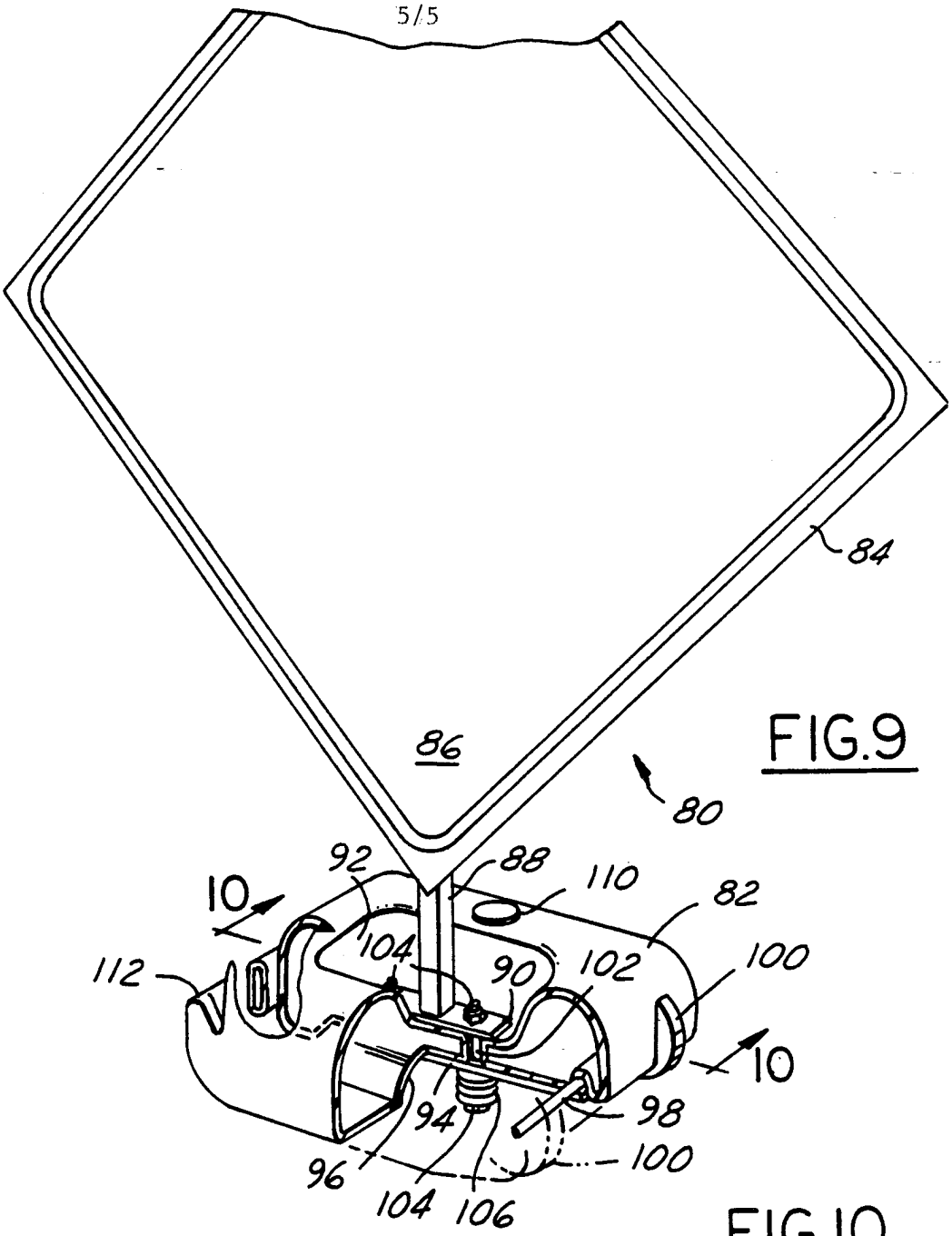
84
86
80
92
88
110
82
10
104
90
102
100
112
10
94
98
96
100
104
106

FIG.9

FIG.10

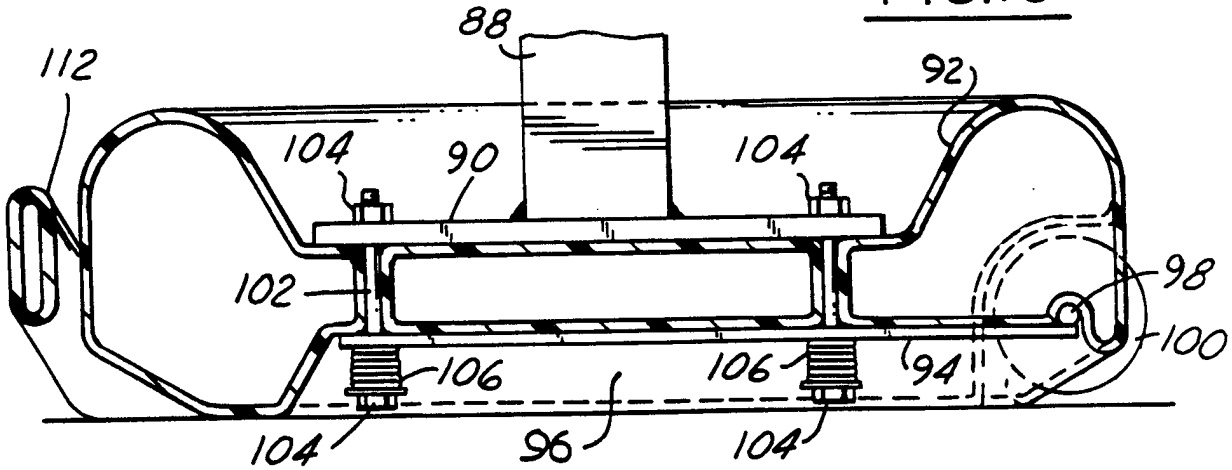
88
112
92
104
90
104
102
98
100
106
106
94
104
96
104

INTERNATIONAL SEARCH REPORT

International application No.
PCT/US98/05662

A. CLASSIFICATION OF SUBJECT MATTER

IPC(6) :G09F 15/00

US CL :40/606,608,612; 248/346.2,900

According to International Patent Classification (IPC) or to both national classification and IPC

B. FIELDS SEARCHED

Minimum documentation searched (classification system followed by classification symbols)

U.S. : 40/606,608,612,607,610; 248/346.2,900,548,910; 473/479

Documentation searched other than minimum documentation to the extent that such documents are included in the fields searched

NONE

Electronic data base consulted during the international search (name of data base and, where practicable, search terms used)

NONE

C. DOCUMENTS CONSIDERED TO BE RELEVANT

Category*	Citation of document, with indication, where appropriate, of the relevant passages	Relevant to claim No.
X ---- Y	US 5,220,740 A (BRAULT) 22 June 1993 (22/06/93), see Figures 1 and 4.	1,4,5 ------ 2 and 3
Y	US 4,033,536 A (HILLSTROM) 05 July 1977 (05/07/77), see Figure 1.	2 and 3

☐ Further documents are listed in the continuation of Box C. ☐ See patent family annex.

*	Special categories of cited documents:	"T"	later document published after the international filing date or priority date and not in conflict with the application but cited to understand the principle or theory underlying the invention
"A"	document defining the general state of the art which is not considered to be of particular relevance	"X"	document of particular relevance; the claimed invention cannot be considered novel or cannot be considered to involve an inventive step when the document is taken alone
"E"	earlier document published on or after the international filing date	"Y"	document of particular relevance; the claimed invention cannot be considered to involve an inventive step when the document is combined with one or more other such documents, such combination being obvious to a person skilled in the art
"L"	document which may throw doubts on priority claim(s) or which is cited to establish the publication date of another citation or other special reason (as specified)	"&"	document member of the same patent family
"O"	document referring to an oral disclosure, use, exhibition or other means		
"P"	document published prior to the international filing date but later than the priority date claimed		

Date of the actual completion of the international search 27 MAY 1998	Date of mailing of the international search report 15 JUN 1998
Name and mailing address of the ISA/US Commissioner of Patents and Trademarks Box PCT Washington, D.C. 20231 Facsimile No. (703) 305-3230	Authorized officer for BRIAN K. GREEN Telephone No. (703) 308-2168

Form PCT/ISA/210 (second sheet)(July 1992)★