(12) INTERNATIONAL APPLICATION PUBLISHED UNDER THE PATENT COOPERATION TREATY (PCT)

(19) World Intellectual Property Organization
International Bureau

(43) International Publication Date
30 June 2016 (30.06.2016)

WIPO | PCT

(10) International Publication Number
WO 2016/102090 A1

(51) International Patent Classification:
A47J 27/08 (2006.01)

(21) International Application Number:
PCT/EP2015/072567

(22) International Filing Date:
30 September 2015 (30.09.2015)

(25) Filing Language: English

(26) Publication Language: English

(30) Priority Data:
A 2014/15772 25 December 2014 (25.12.2014) TR

(71) Applicant: **ARCELIK ANONIM SIRKETI** [TR/TR]; E5 Ankara Asfalti Uzeri, Tuzla, 34950 Istanbul (TR).

(72) Inventors: **DONMEZ, Ersin**; E5 Ankara Asfalti Uzeri, Tuzla, 34950 Istanbul (TR). **YAMAN, Onur**; E5 Ankara Asfalti Uzeri, Tuzla, 34950 Istanbul (TR). **HAZIR, Sefa**; E5 Ankara Asfalti Uzeri, Tuzla, 34950 Istanbul (TR). **YORUKOGLU, Ahmet**; E5 Ankara Asfalti Uzeri, Tuzla, 34950 Istanbul (TR).

(81) Designated States *(unless otherwise indicated, for every kind of national protection available)*: AE, AG, AL, AM, AO, AT, AU, AZ, BA, BB, BG, BH, BN, BR, BW, BY, BZ, CA, CH, CL, CN, CO, CR, CU, CZ, DE, DK, DM, DO, DZ, EC, EE, EG, ES, FI, GB, GD, GE, GH, GM, GT, HN, HR, HU, ID, IL, IN, IR, IS, JP, KE, KG, KN, KP, KR, KZ, LA, LC, LK, LR, LS, LU, LY, MA, MD, ME, MG, MK, MN, MW, MX, MY, MZ, NA, NG, NI, NO, NZ, OM, PA, PE, PG, PH, PL, PT, QA, RO, RS, RU, RW, SA, SC, SD, SE, SG, SK, SL, SM, ST, SV, SY, TH, TJ, TM, TN, TR, TT, TZ, UA, UG, US, UZ, VC, VN, ZA, ZM, ZW.

(84) Designated States *(unless otherwise indicated, for every kind of regional protection available)*: ARIPO (BW, GH, GM, KE, LR, LS, MW, MZ, NA, RW, SD, SL, ST, SZ, TZ, UG, ZM, ZW), Eurasian (AM, AZ, BY, KG, KZ, RU, TJ, TM), European (AL, AT, BE, BG, CH, CY, CZ, DE, DK, EE, ES, FI, FR, GB, GR, HR, HU, IE, IS, IT, LT, LU, LV, MC, MK, MT, NL, NO, PL, PT, RO, RS, SE, SI, SK, SM, TR), OAPI (BF, BJ, CF, CG, CI, CM, GA, GN, GQ, GW, KM, ML, MR, NE, SN, TD, TG).

Published:

— *with international search report (Art. 21(3))*

WO 2016/102090 A1

(54) Title: A FOOD PREPARATION APPLIANCE

Figure 1

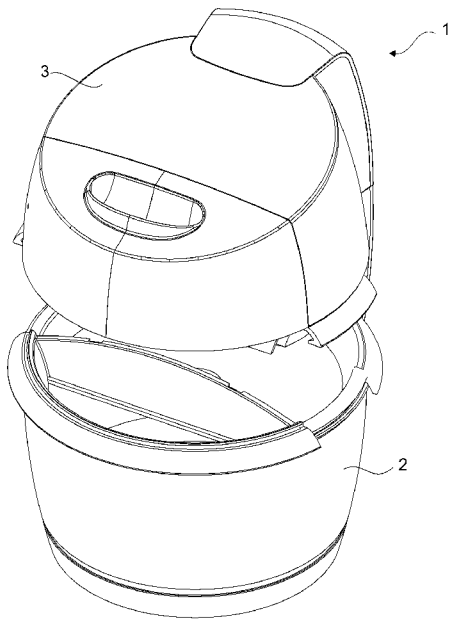

(57) Abstract: The present invention relates to a food preparation appliance (1) suitable to be operated on an induction heating cooker, comprising a body (2) wherein foods are placed for food preparation operations like cooking, cutting and nnixing; a cover (3) mounted over the body (2); one or more than one jaw (4) that is disposed on the cover (3) and that enables the cover (3) to be locked onto the body (2) and a locking mechanism (5) that is disposed inside the cover (3) and that enables the cover (3) to be freed so as to be opened or enables the cover (3) to be locked onto the body (2) by moving the jaws (4) in the horizontal direction.

Description

A FOOD PREPARATION APPLIANCE

[0001] The present invention relates to a food preparation appliance that is operated wirelessly on an induction heating cooker and that is energized from its base.

[0002] The use of kitchen appliances that are operated with the principle of wireless power transmission on the induction heating cooker is known. The appliances that acquire smart features by adding the electronic unit save considerable time for preparing foods and beverages. In these appliances wherein energy can also be delivered from the cover, operations like cutting and mixing can be performed. Moreover, in some appliances the motor and the electronic control unit that control cutting and mixing operations are located inside the cover and energy must be transmitted to these components by taking user safety into consideration. In these appliances, it may be difficult to open the lock to open the cover and lift the cover and at the same time lifting the cover during the operation of the appliance may cause safety problems and accidents.

[0003] In the state of the art European Patent No. EP1130990B1, a food preparation appliance is disclosed, that comprises a locking mechanism that is controlled by means of a button disposed on the handle.

[0004] In the state of the art International Patent Application No. WO2014075923A1, a food preparation appliance is disclosed, that is operated wirelessly on an induction heating cooktop.

[0005] The aim of the present invention is the realization of a food preparation appliance that is enabled to be used in a safe and convenient manner.

[0006] The food preparation appliance realized in order to attain the aim of the present invention, explicated in the first claim and the respective claims thereof, is a food preparation appliance that operates on an induction heating cooker and comprises a body wherein foods are placed for performing operations like cutting, mixing and cooking, a cover that covers the body and jaws that extend from over the cover towards the body and a locking mechanism that enables the cover to be locked onto the body or to be freed so as to be opened with the horizontal movement of the jaws. An

opening is provided on the cover and a handle is disposed around the opening. When the handle is pushed towards the inner region of the cover by the user, the locking mechanism is actuated. Thus, the user actuates the locking mechanism while lifting the cover by means of the handle.

[0007] In an embodiment of the present invention, the locking mechanism comprises a pivot arm whereto the movement is transferred after the actuation of the handle, a fixing bracket whereto the pivot arm is connected and a transmission arm that transfers the movement of the pivot arm to a locking arm whereon an inclined surface is arranged and that comprises a roller at its end in contact with the inclined surface. With the actuation of the locking arm by means of the transmission arm, the jaws move, enabling the cover to be locked on the body or to remain free.

[0008] In an embodiment of the present invention, the semi-circular form of the handle creates a recessed portion at the inner part of the cover. The recessed portion in contact with the pivot arm enables the user to easily grip the handle.

[0009] In an embodiment of the present invention, the handle is connected to the cover by means of a first spring. By means of the first spring, the handle is enabled to return to its initial position after being actuated to move.

[0010] In an embodiment of the present invention, a second spring connected to the transmission arm is provided. By means of the second spring, the locking mechanism is enabled to return to its initial position after the handle is freed. Thus, when the cover is seated onto the body, the jaws move towards the body, enabling the cover to be locked onto the body.

[0011] The food preparation appliance realized in order to attain the aim of the present invention is illustrated in the attached figures, where:

[0012] Figure 1- is the perspective view of a food preparation appliance.

[0013] Figure 2 – is the perspective view of a locking mechanism.

[0014] Figure 3 – is the sideways view of a locking mechanism.

[0015] The elements illustrated in the figures are numbered as follows:

1. Food preparation appliance
2. Body
3. Cover

4. Jaw
5. Locking mechanism
6. Opening
7. Handle
8. Pivot arm
9. Fixing bracket
10. Transmission arm
11. Roller
12. Inclined surface
13. Locking arm
14. First spring
15. Second spring

[0016] The food preparation appliance (1) suitable to be operated on an induction heating cooker, comprises a body (2) wherein foods are placed for food preparation operations like cooking, cutting and mixing; a cover (3) mounted over the body (2); one or more than one jaw (4) that is disposed on the cover (3) and that enables the cover (3) to be locked onto the body (2) and a locking mechanism (5) that is disposed inside the cover (3) and that enables the cover (3) to be freed so as to be opened or enables the cover (3) to be locked onto the body (2) by moving the jaws (4) out of the body (2) and towards the body (2) in the horizontal direction.

[0017] The food preparation appliance (1) of the present invention comprises an opening (6) that is arranged on the cover (3) and a handle (7) that is mounted around the opening (6) to the cover (3) so as to be pivotable around an axis (E), that extends towards the inner region of the cover (3), that moves into the cover (3) by rotating around the axis (E) it is connected to when the user extends his/her hand into the cover (3) through the opening (6) and applies a force in order to lift the cover (3), that enables the jaws (4) to be moved by actuating the locking mechanism (5), also enables the cover (3) to be locked onto the body (2) or to be freed, further providing the actuation of the locking mechanism (5). By means of the locking mechanism (5), by moving the handle (7) into the cover (3) when the cover (3) is desired to be lifted, both the lifting of the cover (3) and the

opening of the cover (3) lock are realized by a single process. It is not possible to lift the cover (3) without opening the lock or to operate the food preparation appliance (1) without locking the cover (3). Thus, user errors and accidents are prevented.

[0018] In an embodiment of the present invention, the food preparation appliance (1) comprises the locking mechanism (5) that enables the transmission of movement from the handle (7) to the jaws (4) and that comprises one or more than one pivot arm (8) that is in contact with the handle (7); one or more than fixing bracket (9) whereto the pivot arm (8) is connected so as to be pivotable around an axis (E); one or more than one transmission arm (10) that is connected to the pivot arm (8) and that moves in the horizontal direction; a roller (11) that is disposed at the end of the transmission arm (10) and one or more than one locking arm (13) that has an inclined surface (12) whereon the roller (11) moves, that is connected to the jaw (4) and that rotates the movement of the transmission arm (10) 90°, thus enabling it to be transmitted to the jaw (4). As the user moves the handle (7), the pivot arm (8) in contact with the handle (7) makes an angular movement over the fixing bracket (9). With the movement of the pivot arm (8), the transmission arm (10) moving in the horizontal direction moves towards the handle (7), enabling the roller (11) disposed on the transmission arm (10) to move over the inclined surfaces (12). With the movement of the roller (11) over the inclined surface (12), the locking arm (13) with one end connected to the jaw (4) moves in the horizontal direction so as to enter the cover (3) or away from the cover (3). With the movement of the jaws (4), the cover (3) is enabled to be locked onto the body (2) or the lock is opened.

[0019] In an embodiment of the present invention, the handle (7) comprises a recessed portion (14) that extends into the cover (3) through the opening (6) and that enables the actuation of the locking mechanism (5) by pushing the pivot arm (8) with which the recessed portion (14) is in contact when a force is applied onto the handle (7) so as to lift the cover (3). The recessed portion (14) formed by the semi-circular handle (7) provides convenience for the user to hold and lift the cover (3).

[0020] In an embodiment of the present invention, the food preparation appliance (1) comprises a first spring (14) that is connected to the handle (7) and that enables the handle (7) to return to its initial position after the handle (7) is moved by exerting a force thereon.

[0021] In an embodiment of the present invention, the food preparation appliance (1) comprises one or more than one second spring (15) that is connected to the transmission arm (10) and that enables the locking mechanism (5) to return to its initial position when the handle (7) is released and enables the cover (3) to be locked onto the body (2) by moving the jaws (4) towards the body (2). By means of the second spring (15), the jaws (4) automatically closes as the cover (3) is released onto the body (2), thus enabling the locking of the cover (3) onto the body (2).

[0022] By means of the present invention, a food preparation appliance (1) is realized, that enables both the lifting of the cover (3) and the opening of the lock of the cover (3) to be performed by a single process. By means of the present invention, user safety and ease of utilization are improved.

Claims

1. A food preparation appliance (1) suitable to be operated on an induction heating cooker, **comprising**

   - a body (2) wherein foods are placed for food preparation operations like cooking, cutting and mixing
   - a cover (3) mounted over the body (2),
   - one or more than one jaw (4) that is disposed on the cover (3) and that enables the cover (3) to be locked onto the body (2) and
   - a locking mechanism (5) that is disposed inside the cover (3) and that enables the cover (3) to be freed so as to be opened or enables the cover (3) to be locked onto the body (2) by moving the jaws (4) in the horizontal direction

   characterized by

   - an opening (6) that is arranged on the cover (3) and
   - a handle (7) that is mounted around the opening (6) to the cover (3) so as to be pivotable around an axis (E), that extends towards the inner region of the cover (3), that moves into the cover (3) by rotating around the axis (E) when a force is applied to the inner region of the cover (3) through the opening (6), providing the actuation of the locking mechanism (5).

2. A food preparation appliance (1) as in Claim 1, **characterized by** the locking mechanism (5) that enables the transmission of movement from the handle (7) to the jaws (4), comprising

   - one or more than one pivot arm (8) that is in contact with the handle (7),
   - one or more than fixing bracket (9) whereto the pivot arm (8) is connected so as to be pivotable around an axis (E),
   - one or more than one transmission arm (10) that is connected to the pivot arm (8) and that moves in the horizontal direction,
   - a roller (11) that is disposed at the end of the transmission arm (10) and
   - one or more than one locking arm (13) that has an inclined surface (12) whereon the roller (11) moves, that is connected to the jaw (4) and that rotates the movement of the transmission arm (10) 90°, thus enabling it to be transmitted to the jaw (4).

3. A food preparation appliance (1) as in any one of the above claims, **characterized by** the handle (7) that has a recessed portion (14) that extends

into the cover (3) through the opening (6) and that enables the actuation of the locking mechanism (5) by pushing the pivot arm (8) with which the recessed portion is in contact when a force is applied onto the handle (7) so as to lift the cover (3).

4. A food preparation appliance (1) as in any one of the above claims, **characterized by** a first spring (14) that is connected to the handle (7) and that enables the handle (7) to return to its initial position after the handle (7) is moved by exerting a force thereon.
5. A food preparation appliance (1) as in any one of the above clams, **characterized by** one or more than one second spring (15) that is connected to the transmission arm (10) and that enables the locking mechanism (5) to return to its initial position when the handle (7) is released and enables the cover (3) to be locked onto the body (2) by moving the jaws (4) towards the body (2).

Figure 1

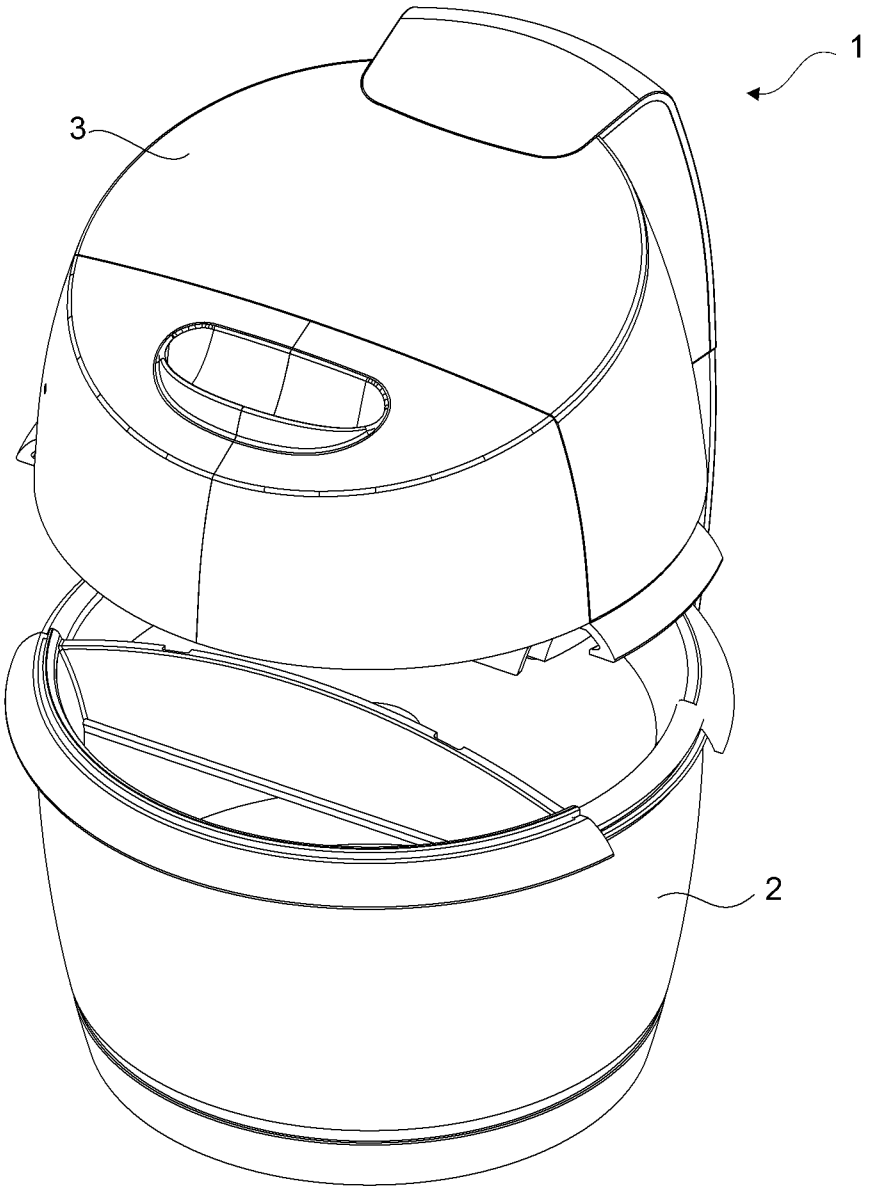

Figure 2

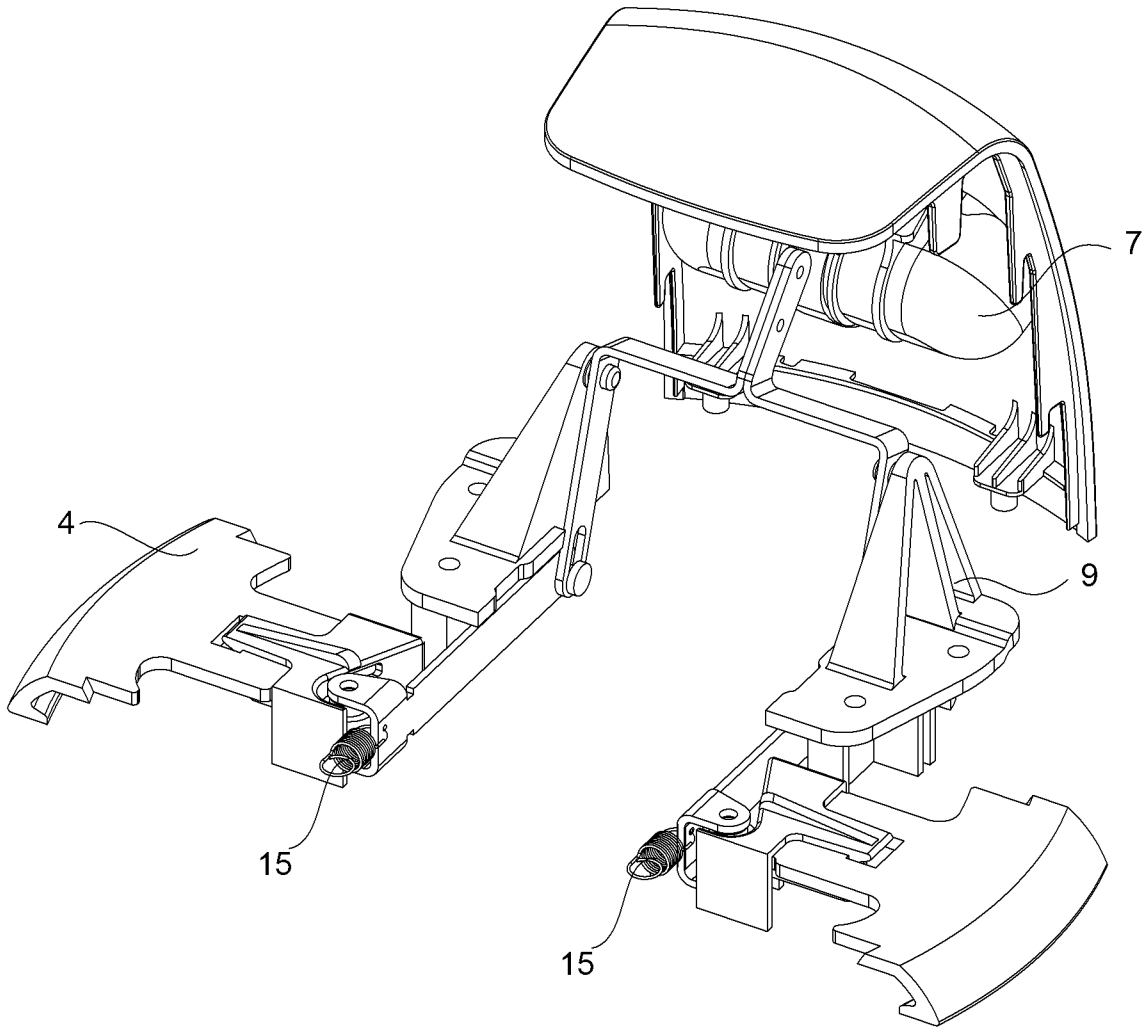

Figure 3

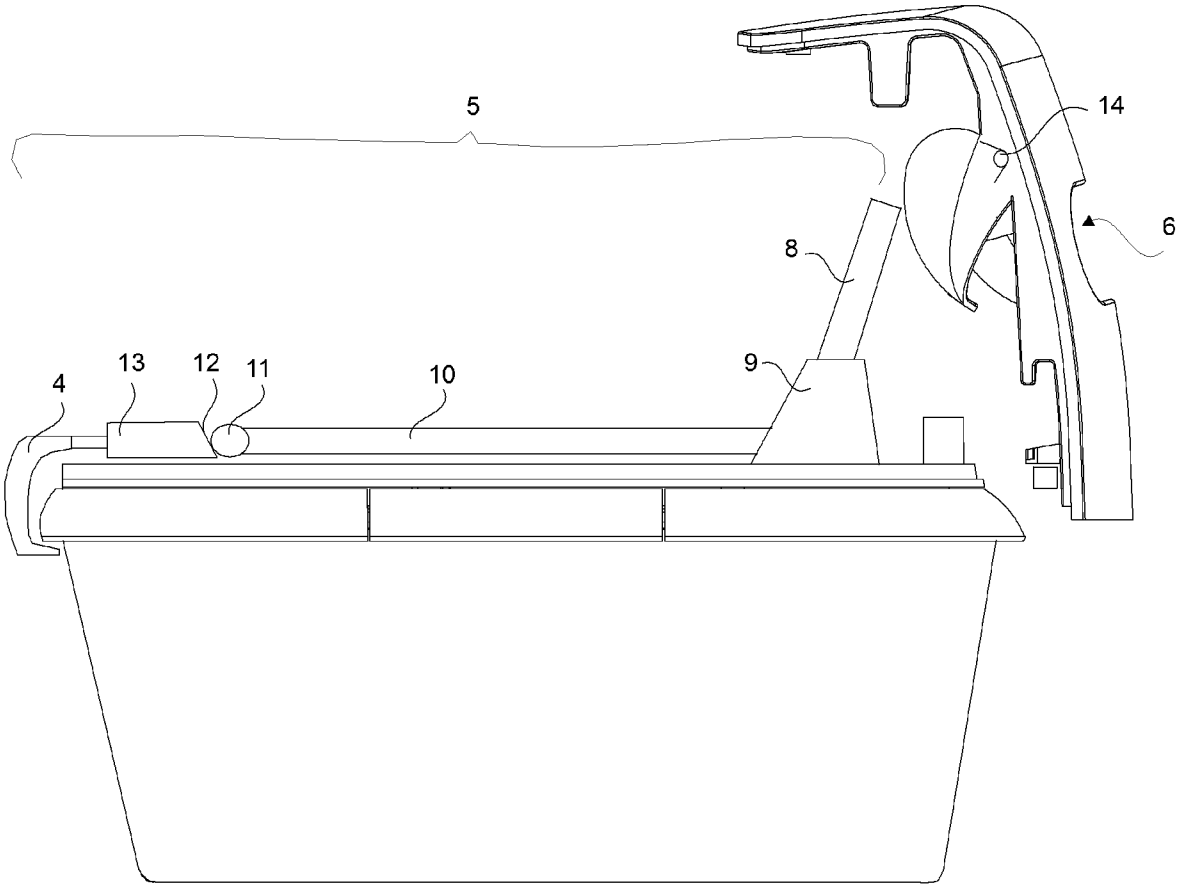

INTERNATIONAL SEARCH REPORT

International application No
PCT/EP2015/072567

A. CLASSIFICATION OF SUBJECT MATTER
INV. A47J27/08
ADD.

According to International Patent Classification (IPC) or to both national classification and IPC

B. FIELDS SEARCHED

Minimum documentation searched (classification system followed by classification symbols)
A47J

Documentation searched other than minimum documentation to the extent that such documents are included in the fields searched

Electronic data base consulted during the international search (name of data base and, where practicable, search terms used)
EPO-Internal, WPI Data

C. DOCUMENTS CONSIDERED TO BE RELEVANT

Category*	Citation of document, with indication, where appropriate, of the relevant passages	Relevant to claim No.
A	US 2014/238182 A1 (AUDETTE DAVID M [US] ET AL) 28 August 2014 (2014-08-28) the whole document	1-5
A	US 2013/098921 A1 (YANG GUOQING [CN] ET AL) 25 April 2013 (2013-04-25) the whole document	1-5
A	CH 685 914 A5 (AMC INT ALFA METALCRAFT CORP [CH]) 15 November 1995 (1995-11-15) the whole document	1-5

☐ Further documents are listed in the continuation of Box C.

☒ See patent family annex.

* Special categories of cited documents :

"A" document defining the general state of the art which is not considered to be of particular relevance

"E" earlier application or patent but published on or after the international filing date

"L" document which may throw doubts on priority claim(s) or which is cited to establish the publication date of another citation or other special reason (as specified)

"O" document referring to an oral disclosure, use, exhibition or other means

"P" document published prior to the international filing date but later than the priority date claimed

"T" later document published after the international filing date or priority date and not in conflict with the application but cited to understand the principle or theory underlying the invention

"X" document of particular relevance; the claimed invention cannot be considered novel or cannot be considered to involve an inventive step when the document is taken alone

"Y" document of particular relevance; the claimed invention cannot be considered to involve an inventive step when the document is combined with one or more other such documents, such combination being obvious to a person skilled in the art

"&" document member of the same patent family

Date of the actual completion of the international search	Date of mailing of the international search report
9 December 2015	18/12/2015

Name and mailing address of the ISA/	Authorized officer
European Patent Office, P.B. 5818 Patentlaan 2 NL - 2280 HV Rijswijk Tel. (+31-70) 340-2040, Fax: (+31-70) 340-3016	Behammer, Frank

INTERNATIONAL SEARCH REPORT

Information on patent family members

International application No
PCT/EP2015/072567

Patent document cited in search report	Publication date	Patent family member(s)	Publication date
US 2014238182 A1	28-08-2014	CA 2844299 A1	28-08-2014
		CN 203935012 U	12-11-2014
		US 2014238182 A1	28-08-2014
US 2013098921 A1	25-04-2013	CN 202355168 U	01-08-2012
		US 2013098921 A1	25-04-2013
		US 2015201801 A1	23-07-2015
CH 685914 A5	15-11-1995	NONE	