K. B. BRITTON.

CARBURETER.

APPLICATION FILED SEPT. 28, 1914.

1,261,756.

Patented Apr. 9, 1918.

Fig. 2.

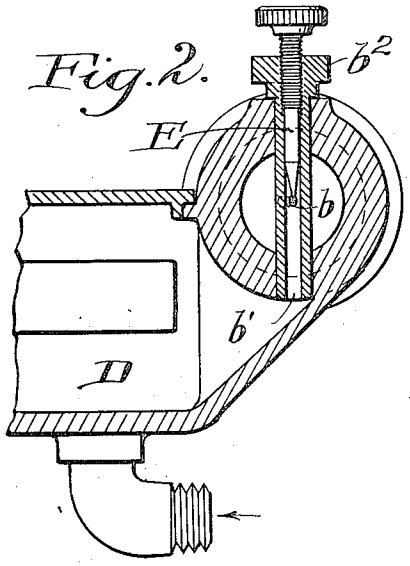

Fig. 1.

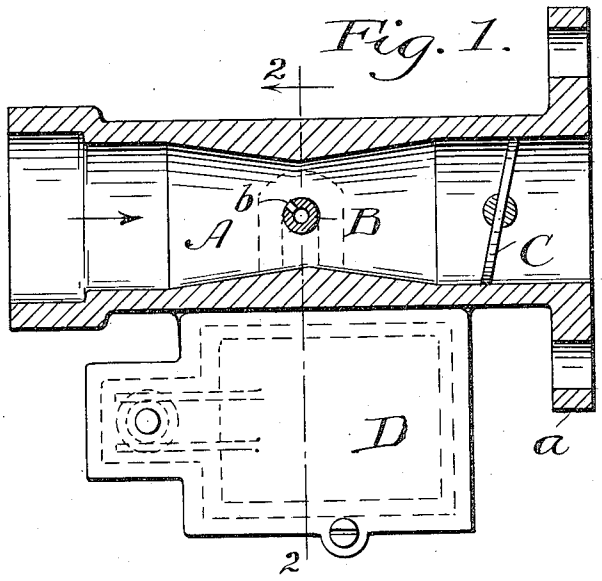

Fig. 4.

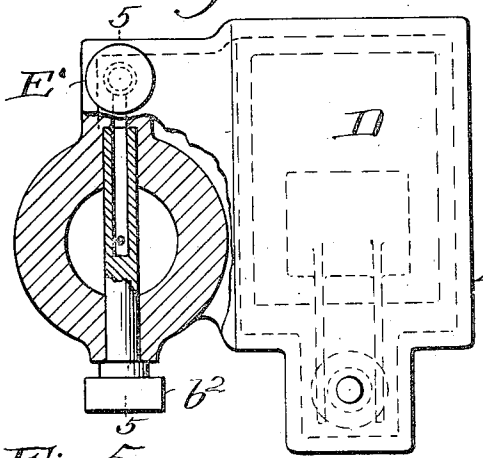

Fig. 5.

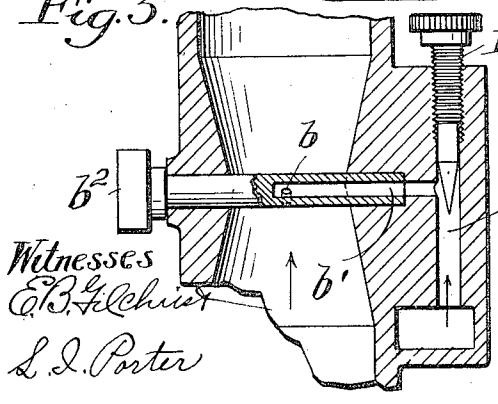

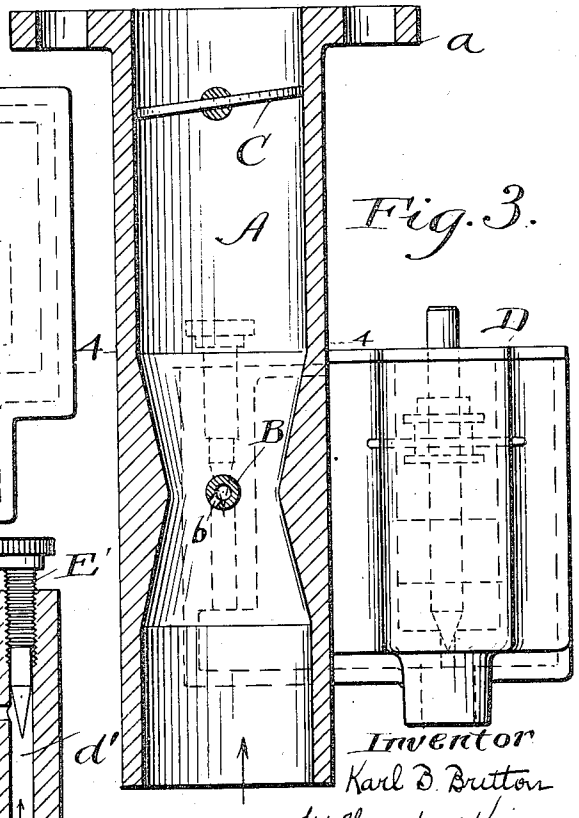

Fig. 3.

Witnesses

E. B. Gilchrist

L. L. Porter

Inventor

Karl B. Britton

by Thurston & Kwis

Attorneys

UNITED STATES PATENT OFFICE.

KARL B. BRITTON, OF CLEVELAND, OHIO, ASSIGNOR TO THE BRITTON CARBURETER COMPANY, OF CLEVELAND, OHIO, A CORPORATION OF OHIO.

CARBURETER.

1,261,756. Specification of Letters Patent. Patented Apr. 9, 1918.

Application filed September 28, 1914. Serial No. 863,845.

To all whom it may concern:

Be it known that I, KARL B. BRITTON, a citizen of the United States, residing at Cleveland, in the county of Cuyahoga and State of Ohio, have invented a certain new and useful Improvement in Carbureters, of which the following is a full, clear, and exact description.

The object of this invention is to provide a cheap carbureter which, when connected with an internal combustion engine, will supply thereto a mixture of air and hydrocarbon vapor of substantially uniform proportions, regardless of changes in the speed or load of the engine.

The invention consists in the construction and combination of parts hereinafter described and pointed out definitely in the appended claims.

In the drawing Figure 1 is a plan view of a carbureter embodying the invention, and having a horizontal air tube,—said air tube and the parts therein being shown in central horizontal section. Fig. 2 is a vertical section of the same carbureter,—the section being in the plane of line 2—2 on Fig. 1. Fig. 3 is a side elevation of a carbureter embodying the invention and having a vertical air tube;—said air tube being shown in vertical section. Fig. 4 is a plan view of the same carbureter with the air tube shown in horizontal section in the plane of line 4—4 on Fig. 3; and Fig. 5 is a vertical section of a part of the air tube,—said section being in the plane of line 5—5 on Fig. 4.

Referring to the parts by letters, A represents the air tube of the carbureter. This is of the usual venturi form, and has a single air inlet opening at one end, and is provided at its open discharge end with a flange *a* to facilitate its connection with the mixture inlet pipe of the engine. This tube contains, adjacent to its discharge end, a throttle valve C which, as shown, is of the usual butterfly form, but may be of any desired form. And this throttle valve governs the rate of flow of the explosive mixture from the carbureter to the engine.

D represents a constant level fuel reservoir,—that is to say, a float chamber of any usual or suitable construction which is adapted for connection with a fuel tank.

B represents the nozzle which extends diametrically across the most restricted part of the Venturi tube A, and is so mounted in the walls thereof that it may be turned in its bearings to the extent necessary, as hereinafter set forth. One end b^2 of the nozzle projects through the wall of the air tube and is made square, or otherwise so shaped as to facilitate the turning of the nozzle for adjustment purposes. A duct b^1 extends longitudinally into the nozzle from the opposite end thereof and to a point adjacent to the center of the air tube. The open end of this duct is in communication with the fuel chamber D. As shown in Fig. 2 the nozzle extends through a wall of the air tube, which is also a wall of the fuel chamber, to a point where it is in open communication with the fuel in said chamber. As shown in Fig. 5 the open end of the nozzle duct b^1 communicates with a duct d^1 formed in the wall of the fuel chamber and opening at its lower end into the fuel chamber below the level of the fuel therein. The fuel discharge jet opening *b* is a radial hole drilled in the nozzle and communicating at its inner end with the fuel duct b^1. The nozzle must be set in such position that this jet opening is directed at an angle, which I have found by actual use should be substantially 45 degrees, toward the inlet end of the air tube, and therefore against the air stream which flows through the air tube from the open inlet end thereof toward the flanged discharge end thereof,—the direction in which the air stream flows being shown by arrows in Figs. 1, 3 and 5. While actual use has demonstrated that the angle of 45 degrees is the angle at which the best or most nearly perfect results are achieved, yet it is possible that moderate variations from this angle may be made without destroying the useful function of the device, and in fact, it may be possible to achieve better proportioning results when so varied than are possible by any other construction now known. It is believed, however, that a variation of 5 degrees or more from the 45 degree angle would so unbalance the forces which operate upon each other to achieve these self-proportioning results as to practically avoid or destroy the operation intended. The term "substantially 45 degrees" as used in the specification and claims is therefore intended to mean an angle not varying more than 5

degrees from the 45 degree angle, although results approaching the desired results may be possible by even greater variations. It will therefore be seen that it is the disposition of this jet opening at substantially the described angle to the inrushing air stream that constitutes the fundamentally novel characteristic of the described carbureter, and makes it possible to produce the desired results without using any of the several kinds of auxiliary proportioning devices which are generally found in carbureters.

It may be desirable to variably restrict the size of the duct through which the fuel flows from the float chamber to the jet opening. In the construction shown in Fig. 2 this may be accomplished by a needle valve E which screws longitudinally into the nozzle so as to extend to a greater or less degree over the inner end of the jet opening. Or, as shown in Fig. 5 a needle valve E^1 may be screwed down through the wall of the float chamber into the duct d^1. It will, of course, be understood that the discharge end of the jet opening is above the level of the fuel in the float chamber.

The flow of fuel from the float chamber through the described ducts and out of the jet opening b into the air tube may be said to be caused by the atmospheric pressure on the fuel in the float chamber; and it may be said that such flow is opposed by the air pressure in the air tube. When the engine, to which the carbureter is attached, is not running, these pressures are equal, and therefore there is no flow of fuel from the jet opening. But when the engine is running, on each suction stroke a partial vacuum is created in the air tube,—that is to say, there is a reduction of static pressure therein. As a result, the air rushes into the open end of the air tube, but never at a sufficient rate to completely fill the vacuum. In other words, the static air pressure in the air tube is reduced on said suction strokes, and this results in the flow of fuel from the float chamber out of the jet opening into the air tube, where it vaporizes and becomes mixed with the inrushing air. The wider open the throttle valve, the more rapid will be the flow of air into and through the air tube, and the greater will be the reduction of static pressure of the air in said air tube, and consequently the higher will be the rate of fuel flow. With nearly all carbureters which have attained any practical and commercial success, and which have been constructed without auxiliary proportioning devices, the rate of flow of fuel has increased more rapidly than the rate of flow of air past the nozzle. Therefore the resulting mixture grows progressively richer as the engine speed increases.

The carbureter shown in the drawing and heretofore explained is unique in that it is self-proportioning because the fuel jet opening is directed at an angle, as stated, against the inrushing air stream.

The flow of fuel from a nozzle which discharges into the air tube of a carbureter is affected not only by the change in the static pressure in the air tube,—that is to say, the change in the static head of the air in said air tube, but it is also affected by the change in the velocity head of the flowing air stream. As the speed or load of the engine is increased the static head of the air in the air tube is decreased, and this, obviously, results in an increase in the rate of flow of the fuel. But as the static head of the air stream is decreased, the velocity head is increased. With the carbureter herein shown and described, the jet opening is directed against the flowing air stream and the increased velocity head tends to oppose the increase in the rate of fuel flow which the decrease in the static head of the air promotes.

I have discovered that when the jet opening is disposed, as shown in the drawing and as hereinbefore described, in the direction of about 45 degrees against the flowing air stream, the stated reverse changes in the velocity head and the static head of the flowing air stream, which occur when the speed or load of the engine is varied, have such counterbalancing effects upon the flow of fuel as will cause the maintenance of a substantially constant ratio between the fuel discharged from said jet opening and air flowing through the air tube.

Having described my invention, I claim:

1. In a carbureter, the combination of an air tube of fixed dimensions, a fuel nozzle having a jet opening through which fuel may flow from said nozzle into said air tube,—which jet opening is constructed to discharge in one direction only in relation to the incoming air stream which direction is at an angle of about 45° against said air stream flowing through said air tube, and a source of fuel supply with which said nozzle communicates.

2. In a carbureter, the combination of an air tube adapted for connection at its outlet end with the mixture inlet pipe of an internal combustion engine and having an air inlet opening of invariable size adjacent its other end, a fuel nozzle having a fuel jet opening arranged to discharge into the air tube at an angle of approximately 45° toward the inlet end of said air tube and without any contra-disposed openings, and a source of fuel supply with which said nozzle is connected.

3. In a carbureter, the combination of an air tube having an outlet adjacent to one end which end is adapted for connection with the mixture inlet pipe of an internal combustion engine, and having adjacent to its

other end an air inlet whose effective area is invariable during different running conditions of the associated engine, a fixed nozzle which projects into said air tube between the inlet and outlet openings thereof,—which nozzle is constructed with all its discharge area positioned in a direction at an angle of about 45° against the air stream flowing through said air tube, and a constant level fuel chamber with which said nozzle is in communication, and a valve for varying the size of the opening through which fuel may flow into said nozzle from said fuel chamber.

4. A carbureter for internal combustion engines comprising an air tube and a fuel nozzle positioned in said air tube, the discharge duct of the nozzle opening being positioned at an angle of approximately 45° in relation to the direction of the air suction through said air tube, whereby the discharge of fuel from said fuel nozzle is automatically regulated by the velocity of the air passing through said tube, substantially as set forth.

In testimony whereof, I hereunto affix my signature in the presence of two witnesses.

KARL B. BRITTON.

Witnesses:
L. I. PORTER,
A. J. HUDSON.