Oct. 10, 1961 J. J. ROBINSON 3,003,540

METAL FORMING APPARATUS

Filed July 27, 1959 2 Sheets-Sheet 1

FIG. 2

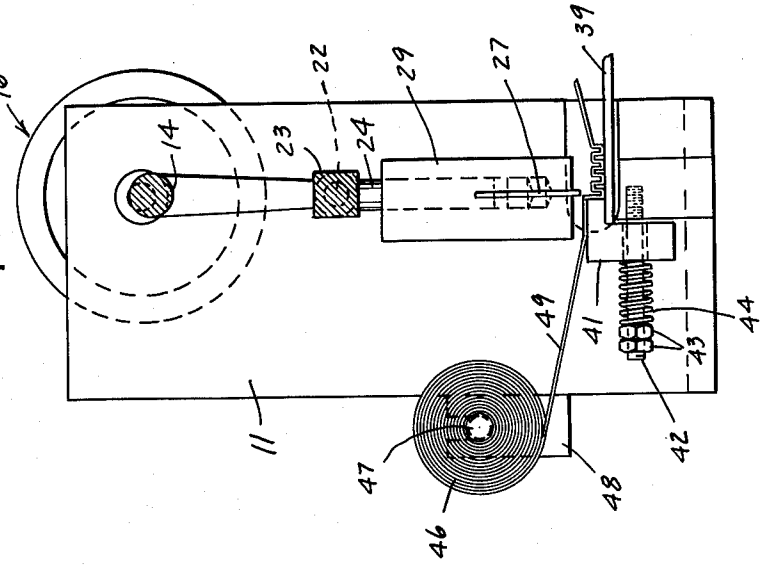

FIG. 1

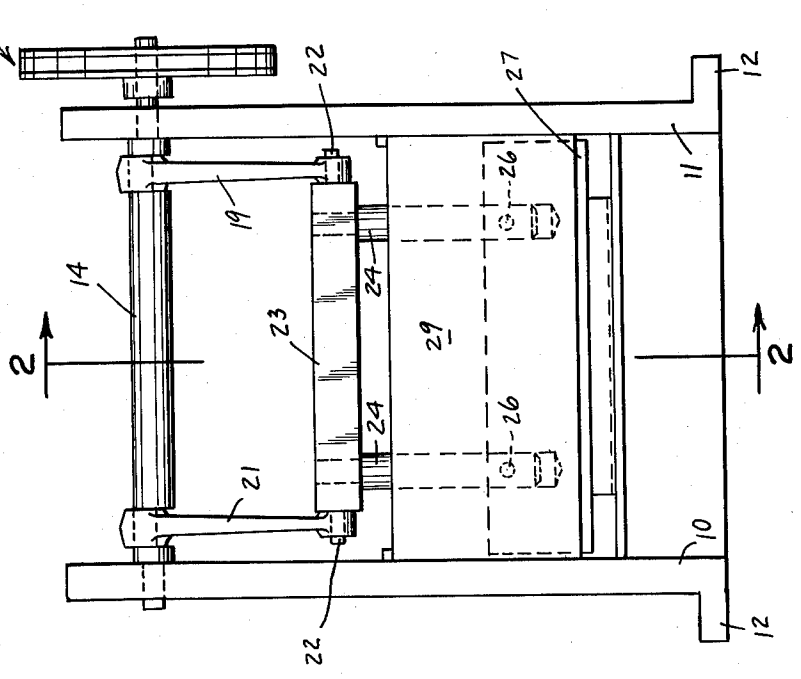

INVENTOR.
JAMES J. ROBINSON.

BY
Lockwood, Woodard, Smith & Weikart.
ATTORNEYS.

Oct. 10, 1961 J. J. ROBINSON 3,003,540

METAL FORMING APPARATUS

Filed July 27, 1959 2 Sheets-Sheet 2

FIG. 3

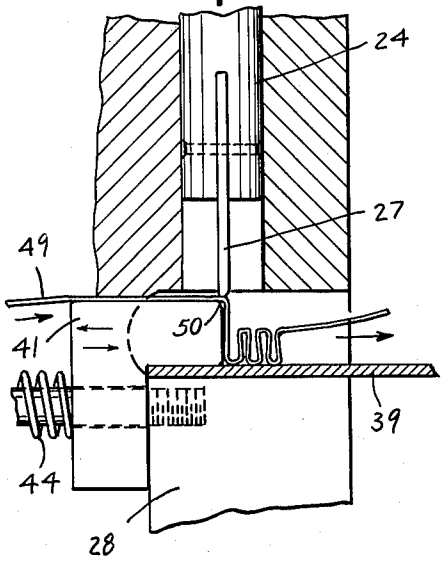

FIG. 4

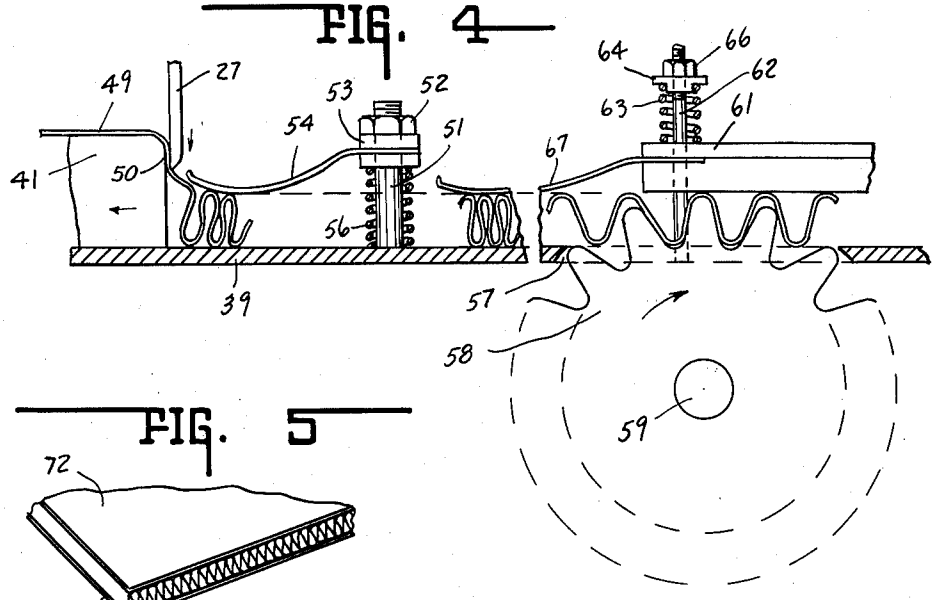

FIG. 5

INVENTOR.
JAMES J. ROBINSON.

BY
Lockwood, Woodard, Smith & Weikart.
ATTORNEYS.

United States Patent Office 3,003,540 Patented Oct. 10, 1961

3,003,540

METAL FORMING APPARATUS

James J. Robinson, 324 N. Agnes St., Indianapolis, Ind.

Filed July 27, 1959, Ser. No. 829,637
2 Claims. (Cl. 153—76)

This invention relates generally to metal forming apparatus, and in particular to a machine for continuously forming metal strips or sheets into sinuous or corrugated configurations of various shapes or sizes.

Sheet metal folded upon itself to provide a generally sinuous configuration, has many conventional applications. By suitably bonding face sheets to the margins of the folds, the resulting product may be utilized as a heat exchange member within which heating or cooling fluid may be circulated. The formed metal sheets may also be utilized as covering or masking members wherever their surface provides the desired aesthetic effect. By bonding wood veneer, leather or the like, as a face sheet to the formed metal, the resulting product may be utilized as interior wall panels, these being characterized by rigidity and lightness in weight.

Conventionally, in products of the type referred to above, the required corrugations or folds are placed in the metal sheets by means of a series of rollers or formers which rotate in planes parallel to the axes of the folds and to the direction of movement of the metal sheet through the rollers. The machinery required for this type of forming is characteristically complicated and difficult to adjust.

The apparatus of the present invention utilizes a single moving blade to form the folds in the metal sheet or blank one fold at a time. The blade moves, and consequently the folds are formed, in a plane transverse to the direction of movement of the metal stock through the apparatus. A movable forming block adjacent the blade permits advancement of the metal as the fold is formed. The resulting product therefore retains its strength at elevated temperatures and is not subject to fatigue failure as would be the case if the formation of the folds resulted in internal deformation or drawing of the metal stock.

The apparatus of the present invention further utilizes an adjustable means which exerts a pressure on the metal folds as they are formed to provide them with the desired tightness or spacing. The apparatus may further incorporate a means for adjustably expanding the folds after they have been formed to provide the finished folds with the desired configuration and consistency.

It is an object of the present invention, therefore, to provide an apparatus for forming corrugated or folded metal sheets which is characterized by a simple low-cost construction, and which has a flexibility in operation permitting folds of various types and complexity to be formed.

A further object of the invention is to provide an apparatus for forming corrugated or folded metal sheets in which the forming of the folds in the metal blank occurs without drawing or otherwise applying extensive tensile stress to the metal blank.

A further object of the present invention is to provide an apparatus for forming corrugated or folded metal sheets which incorporates a conveniently adjustable means for determining the tightness of the folds formed by the apparatus.

A further object of the present invention is to provide an apparatus for forming corrugated or folded metal sheets having means for automatically stretching or relieving the folds formed by the apparatus to the desired fold configuration.

The full nature of the invention will be understood

from the accompanying drawings and the following description and claims:

FIG. 1 is a front view of an apparatus embodying the present invention.

FIG. 2 is a side sectional view taken generally along the line 2—2 of FIG. 1.

FIG. 3 is an enlarged fragmentary view illustrating the action of certain portions of the apparatus.

FIG. 4 is an enlarged fragmentary view illustrating the action of certain further portions of the apparatus.

FIG. 5 is a fragmentary, perspective view of a typical product formed by the apparatus of the present invention.

Referring initially to FIGS. 1 and 2, the apparatus includes a supporting frame comprising vertical, stationary plates 10 and 11 which may be suitably mounted by means of horizontally-extending base flanges 12. Adjacent their upper ends the support plates journal for rotation a horizontal shaft 14. The shaft is provided at its outer ends with suitable drive gearing indicated generally at 16. It will be understood that the machine may be driven by a suitable source of mechanical power such as an electric motor (not shown). The shaft is appropriately formed at 17 and 18 to act as a crank shaft for connecting rods 19 and 21. The ends of the connecting rods rotate about pins 22 extending from the ends of a transverse member 23. The member 23 has depending therefrom rods or plungers 24 which at their lower ends have rigidly secured thereto by means of rivets 26 a forming member or blade 27.

The rods are adapted to freely reciprocate within appropriately sized apertures in a plate 29 which is held between the plates 10 and 11. Rigidly extending between plates 10 and 11 is a member 28. A guide plate 39 is supported by the plates 10 and 11 and extends horizontally outward from one margin of the support plates. A forming abutment or block 41, generally L-shaped in cross section, is positioned adjacent the guide plate and is mounted on member 28 by means of spaced pins 42. The pins 42 at their inner end are threaded into the member 28 and extend freely through suitable apertures in the block. The outer ends of the pins have threaded thereon adjusting and locking nuts 43. A compression spring 44 extends between the block and the adjusting nut 43 and serves to urge the block against the member 28.

A supply of sheet metal stock in the form of a roll 46 is carried by a shaft 47 adjacent the rear margins of the support plates 10 and 11. The shaft may be supported in any suitable fashion, such as indicated in FIG. 2, wherein it extends between bearing brackets 48 carried by the plates 10 and 11. The metal stock 49 extends over the block 41 and beneath the blade 27 where it is provided with a folded configuration as will be subsequently described.

Referring to FIG. 4, there is shown the extending portion of the guide plate 39 which is not visible in FIG. 2. Slightly outwardly of the blade 27 the plate 39 rigidly supports a pin 51 which at its upper end is threaded to receive the adjusting nut 52. The shank of the pin slidably accommodates a mounting member 53 for a resilient spring blade 54. A compression spring 56 urges the mounting member 53 upwardly against the nut 52. The resilient member 54 extends to a point adjacent the blade 27 and exerts a downward force upon the folds formed in the metal stock as will subsequently be described.

Outwardly of the pin 51 the guide plate is slotted at 57 to accommodate a splined or toothed roller 58 rotated by a shaft 59 which extends parallel to and beneath the guide plate and which may be rotated by a suitable source of mechanical power (not shown). The splines of the roller extend into the folds in the metal stock and

urge the folded stock rightwardly, as viewed in FIG. 4. The folded stock is urged against the splined roller by means of a spring loaded retaining plate 61. The plate is mounted by means of pins 62 which extend freely through suitably positioned apertures in the plate 61 and are threaded into the plate 39. A compression spring 63 extends between the upper face of the plate 61 and a spring retainer 64 which is slidably carried on the pin 62. The outer end of the pin is threaded to accommodate an adjusting nut 66 which permits adjustment of the spring 63. A somewhat resilient plate or blade 67 it carried by the plate 61 and extends from the rear margin thereof into contact with the metal folds preceding their entry into their area where they are picked up by the splines on the roller 58.

Referring to FIGS. 3 and 4, it may be seen that as the blade 27 starts its downward stroke, the metal stock at the point indicated at 50 in FIG. 3 is jammed between the blade 27 and the block 41. As may best be seen in FIG. 4, the continued advancement of the blade in its downward stroke cams the block 41 leftwardly against the force exerted by spring 44 and moves the stock indicated at 50 downwardly to form a fold which has a height of approximately half the height of the block 41. As the stock is carried downwardly along the side face of the block 41, it will be evident that additional stock will be drawn from the roll 46 and advanced over the upper surface of the block 41. The metal stock is thus not drawn or tensioned by the forming blade as it completes its downward stroke. When the blade has bottomed the stock against the plate 39 it proceeds through its upward stroke and the spring 44 moves the block rightwardly again to its position of FIG. 3 in preparation for the next downward stroke of the forming blade.

As the folds are formed their rightward movement along the plate 39 is retarded by the frictional force exerted by the resilient member 54. Adjustment of the force exerted by the member 54 on the metal folds thus provides a means for adjusting the tightness of the folds. Thus, if the member 54 is adjusted to exert a relatively large retarding force on the metal folds, the folds will be relatively closely spaced; if the retarding force exerted by member 54 is relatively light, the folds will be looser.

As the folded metal stock advances under the resilient member 67, it will again be retarded thereby, resisting the action of the splined roller 58 in advancing the folded stock. The action of the splined roller in advancing the stock rightwardly, as viewed in FIG. 4, thus tends to stretch or extend the folds against the retarding force exerted by the resilient member 67. The amount of stretching of the folds may be varied by adjusting the retarding force exerted by the resilient member 67 on the folds. The fold stretching action provided by the splined roller and the resilient member 67 permits the formation of closely spaced folds by the forming plate 27 which may then be stretched or expanded to the configuration desired in the finished product. The fold configuration formed by this stretching action is characterized by a relatively high degree of consistency in fold depth and spacing.

As shown in FIG. 5, the folded sheets or strips formed in the apparatus of the present invention may have face sheets 72 suitably bonded to the margins of the folds, and the resulting product is characterized by strength and rigidity but is relatively light in weight. The apparatus of the present invention may be particularly utilized in forming aluminum sheets or strips but can also suitably form copper or stainless steel strips or sheets.

The folds may be formed in the metal blank at an angle to the axis or center line of the blank by feeding it over the block 41 and into the forming blade at the required angle. The simplicity of the apparatus is such that with the relatively simple metal folding operations the stock may be moved through the machine at a high rate of speed.

While the drawing and description have described the apparatus of the present invention as operating on the metal sheets in strip form, it will be apparent that the width of the blades and the spacing of the support plates 10 and 11 may be such as to accommodate sheets of any standard width.

While the invention has been disclosed and described in some detail in the drawings and the foregoing description, they are to be considered as illustrative and not restrictive in character, as modifications may readily suggest themselves to persons skilled in this art and within the broad scope of the invention, reference being had to the appended claims.

The invention claimed is:

1. An apparatus for forming a series of parallel folds in a strip of metal stock, said apparatus including a forming blade positioned on one side of said stock and adapted to be reciprocated through extending and retracting portions of its stroke in a plane transverse to the plane of said stock, a forming block positioned on the opposite side of said stock and adapted to be moved in a plane parallel to the plane of said stock, the leading margin of said block having a rounded configuration, a guide plate underlying said block and extending beyond said blade, spring means resiliently urging the leading margin of said block beneath said blade, said stock being positioned between said blade and said block whereby as said blade moves through the extending portion of its stroke the stock is jammed between said block and said blade, said block being moved against the force exerted by said spring means to permit formation of a fold by said blade as it approaches said guide plate, said block returning to its position beneath said blade as said blade completes the retracting portion of its stroke to thereby advance said stock into position for the next extending stroke of said blade.

2. An apparatus for forming a series of folds in a strip of metal stock, said apparatus including a forming blade positioned on one side of said stock and adapted to be reciprocated through extending and retracting portions of its stroke in a plane transverse to the plane of said stock, a forming block positioned on the opposite side of said stock and adapted to be moved in a plane parallel to the plane of said stock, the leading margin of said block having a rounded configuration, spring means resiliently urging the leading margin of said block beneath said blade, said stock being positioned between said blade and said block whereby as said blade moves through the extending portion of its stroke the stock is jammed between said block and said blade, said block being moved against the force exerted by said spring means to permit formation of a fold by said blade as it moves through the extending portion of its stroke, said block returning to its position beneath said blade as said blade completes the retracting portion of its stroke to thereby advance said stock into position for the next extending stroke of said blade.

References Cited in the file of this patent

UNITED STATES PATENTS

418,915	Hisley et al.	Jan. 7, 1890
1,000,688	Ohl	Aug. 15, 1911
2,329,789	Schank et al.	Sept. 21, 1943
2,636,540	Lincoln	Apr. 28, 1953