Oct. 9, 1934. A. S. KATZ 1,975,792

PAPER DISPENSING DEVICE

Filed Dec. 16, 1932

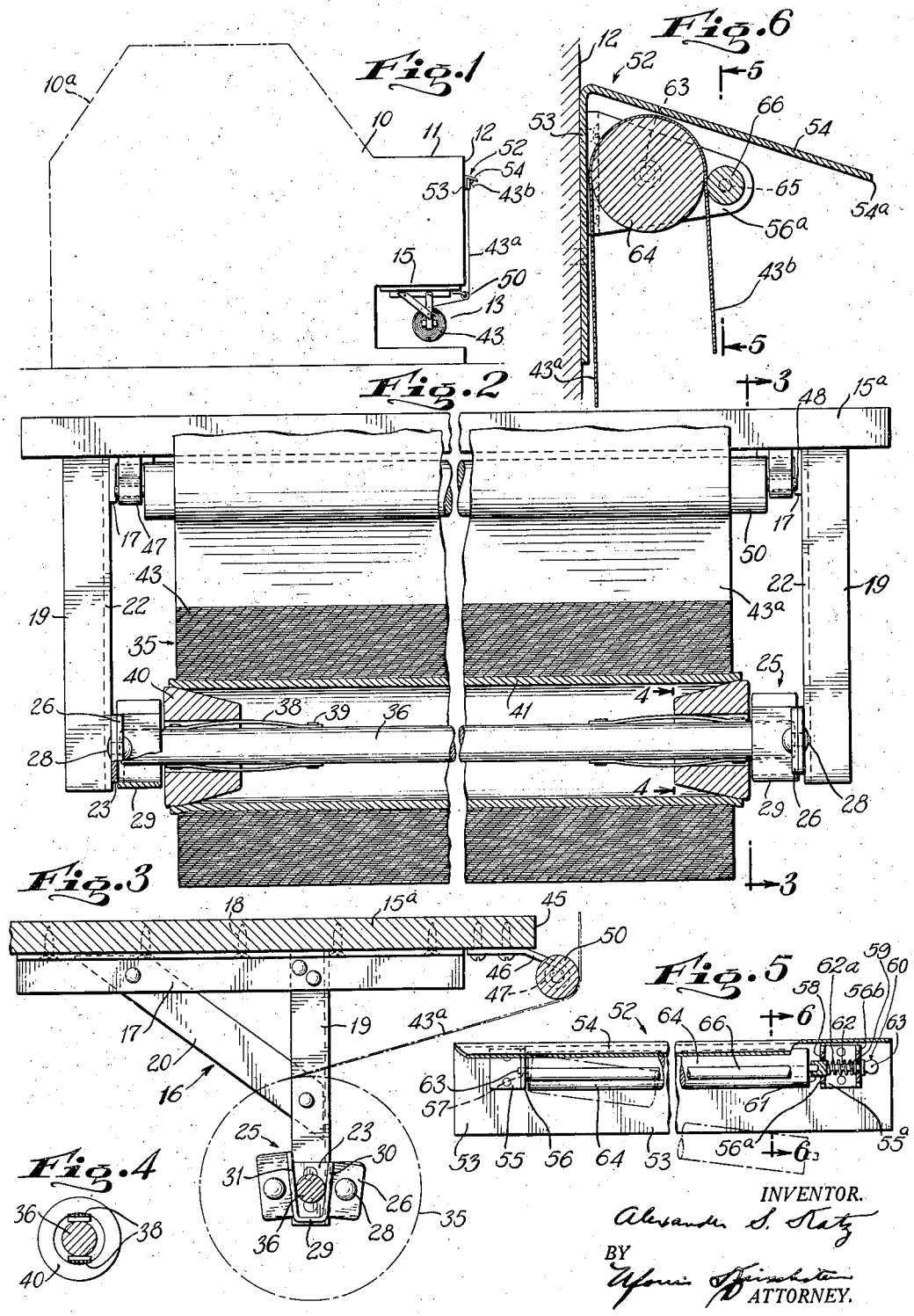

INVENTOR.

Alexander S. Katz

BY

Uforin Kirschstein

ATTORNEY.

Patented Oct. 9, 1934 1,975,792

UNITED STATES PATENT OFFICE

1,975,792

PAPER DISPENSING DEVICE

Alexander S. Katz, Brooklyn, N. Y.

Application December 16, 1932, Serial No. 647,545

2 Claims. (Cl. 242—55.2)

This invention relates to paper dispensing devices. It is particularly directed to apparatus for holding a roll of sheet material such as wrapping paper and means for permitting pieces of the paper to be severed from the roll.

An object of this invention is to provide apparatus of the character described having means for holding the outer edge of the paper in such position that it may be easily grasped so that another length of paper may be unwound and severed from the roll.

A further object of this invention is to provide apparatus of the character described having means for preventing the roll from continuing to rotate by inertia after the desired length of paper has been unwound therefrom for the cutting operation.

A still further object of this invention is to provide in apparatus of the character described, means for supporting a roll of paper in suspended position beneath a counter, the construction being such furthermore, that the cutting edge may be spaced remotely from the roll holder near the top of the counter whereby the outer end edge of the paper is more accessible.

Still another object of this invention is to provide a compact, neat and rugged apparatus of the character described, which shall comprise few and simple parts, be relatively inexpensive to manufacture, easy to install and operate, and which shall nevertheless be practical and efficient to a high degree in use.

Other objects of this invention will in part be obvious and in part hereinafter pointed out.

The invention accordingly consists in the features of construction, combinations of elements, and arrangement of parts which will be exemplified in the construction hereinafter described, and of which the scope of application will be indicated in the following claims.

In the accompanying drawing, in which is shown one of the various possible illustrative embodiments of this invention,

Fig. 1 is an elevational end view of a counter provided with paper holding and cutting apparatus embodying the invention;

Fig. 2 is a front elevational view of the paper roll holder with parts in cross-section;

Fig. 3 is a cross-sectional view taken on line 3—3 of Fig. 2;

Fig. 4 is a cross-sectional view taken on line 4—4 of Fig. 2;

Fig. 5 is a cross-sectional view taken on line 5—5 of Fig. 6; and

Fig. 6 is a cross-sectional view taken on line 6—6 of Fig. 5.

Referring now in detail to the drawing, 10 designates a counter which may be of usual construction, for example of the type having a show case portion 10*a* and formed with a top wall 11, a rear wall 12 and a chamber or recess 13 adjacent the bottom rear of the counter. The recess 13 forms, as shown in Fig. 1, of the drawing, an undersurface 15, and attached to said undersurface in any suitable manner is a flat board 15*a* to which there is fixed a pair of vertical, similar, symmetrically disposed, parallel brackets 16. Each of said brackets is provided with a top cross member 17 preferably made of angle iron and attached to said undersurface 15 by means of screws 18 or the like fastening elements. Fixed to each member 17 is a downwardly extending member 19 likewise preferably made of angle iron. The members 19 may be interconnected to the members 17 by inclined struts 20 to provide a rigid construction.

It will be noted that the angle-shaped members 19 are provided with inner vertical walls 22 parallel to one another. Attached to the lower end of each wall 22 is a plate 23 having ear portions extending beyond the sides of said wall 22. Attached to each plate 23 is a socket member 25 having wings 26 contacting the outwardly extending ear portions of the member 23 and fixed thereto by means of rivets 28. Interconnecting the wings 26 is a U-shaped portion having a bottom wall 29 and a pair of upwardly and somewhat outwardly inclined or diverging walls 30 and 31. The rear wall 31 extends preferably beyond the wall 30 for the purpose hereinafter appearing.

The roll unit 35 comprises a central shaft 36 the ends whereof are adapted to be received within the sockets formed by the members 25. It will be noted that the ends of the shaft do not contact the bottom walls 29 of said sockets, but are wedged between the inclined or diverging walls 30 and 31. With such construction, the shaft 36 may readily rotate within the sockets and sufficient friction is exerted on the ends of the shaft to prevent said shaft from racing upon unwinding paper from the roll, as will appear hereinafter.

Attached to the shaft 36 inwardly of the ends thereof, are spaced pairs of bow springs 38 having the ends thereof attached to the shaft as at 39. Received on the bow springs are inwardly tapering conical members 40 having central openings of somewhat greater diameter than that of the shaft 36 and frictionally engaging the bow springs 38 so that said conical members 40 may rotate together with said shaft. Mounted on the members 40 is a cylindrical tubular member 41 made of heavy cardboard or any other suitable material, said cylindrical member carrying a roll 43 of wrapping paper or the like sheet material. It will now be understood that as the end of the roll of paper 43 is pulled, said roll together with the members 40 and the shaft 36 will rotate within the sockets 25. Since the rear

walls 31 of sockets 25 are taller than front walls 30, the shaft may easily be mounted on said sockets, the rear walls serving as stops and guides for this purpose.

Attached to the forward edge 45 of the board 15*a* are a pair of brackets 46 formed with looped ends 47 forming bearing openings for receiving a pin 48 on which is mounted an idle roller 50. The strip of paper 43*a* from the roll 43 may pass from said roll beneath the roller 50. The roller 50 preferably projects beyond the surface of the vertical rear wall 12 for the purpose hereinafter appearing.

Attached to the rear wall 12 of the counter, adjacent the top surface 11 thereof, is a member 52 made of sheet metal and having a wall 53 contacting said rear wall, and a wall 54 extending away from said rear wall and somewhat inclined downwardly. Fixed to the wall portion 53 of said member 52 are a pair of spaced, parallel members 55 and 55*a*, the former being disposed adjacent one end of the wall and having a wall 56 at right angles thereto, and the latter being disposed adjacent the opposite end of said wall 53 and having a pair of spaced, parallel walls 56*a* and 56*b* likewise disposed at right angles to the wall 53. The wall 56 is formed with a bearing opening 57 and wall 56*a* is formed with a bearing opening 58 aligned with said bearing opening 57 but somewhat larger in diameter. The wall 56*b* is formed with a bearing opening 59 aligned with the bearing openings 57 and 58. Slidably mounted on the walls 56*a* and 56*b* is a plunger 60 having a cylindrical socketed portion 61 slidably received in the bearing 58 and a pin or rod portion 62 slidably received in the bearing opening 59.

It will be noted that the portion 62 is of smaller diameter than the socketed portion 61 and received on said portion 62 is a coil compression spring 62*a* abutting the portion 61 at one end and the inner surface of the wall 56*b* at the other end. A finger knob or head 63 is attached at the outer end of the portion 62 and contacts the outer surface of the wall 56*b*. It will be noted that the plunger may be retracted by pulling the finger knob and pressing the spring 62.

Rotatably mounted on the wall 56 and on the socketed portion 61 is a roller 64 having pins at the ends thereof journalled within the bearing opening 57 and within the opening of the socket 61, respectively. It will thus be noted that the roller 64 may be removed by retracting the plunger 60 to release one end of the roller. The walls 56 and 56*a* are further formed with aligned bearing openings 65 for receiving the outer pin ends of a smaller roller or rod 66 disposed parallel to the roller 64 and somewhat spaced therefrom.

The sheet of paper 43*a* is adapted to pass under roller 50 and upwardly betwen the roller 64 and the wall 53. The strip of paper then passes around the roller 64 and between said roller and the roller 66, said strip being frictionally grasped between said rollers.

It will be noted that the outer end 43*b* of the strip of paper is maintained in a downwardly and forwardly inclined position by the rod 66. To cut a length of paper, the outer edge 43*b* is grasped and the paper pulled to cause the roll 43 to unwind. When sufficient length of paper has been pulled, the paper is pulled upwardly and cut against the outer edge 54*a* of the wall 54. A small length of paper then remains projecting from between the roller 54 and the roller 66. This small length of paper affords a good grasp when the paper is again to be unwound for cutting a length thereof.

It will now be noted that as the paper is pulled, the same will unwind from the roll 43 without permitting the roll to race or rotate with undue speed by reason of the friction between the ends of the shaft 36 and the socket portions of the member 25. Furthermore, the frictional grip of the roller 64 and rod 66 on the end of the strip 43*b* retains the strip in proper position for grasping and prevents too much of the paper from being unwound.

It will be further noted that the roll 43 is out of the way, within the recess 13 which is usually formed in counters of the show case type. The edge 43*b* of the paper which is grasped by the hand is nevertheless adjacent the top of the counter where it is easily accessible.

It will thus be seen that there is provided a device in which the several objects of this invention are achieved, and which is well adapted to meet the conditions of practical use.

As various possible embodiments might be made of the above invention, and as various changes might be made in the embodiments above set forth, it is to be understood that all matter herein set forth or shown in the accompanying drawing is to be interpreted as illustrative and not in a limiting sense.

Having thus described my invention, I claim as new and desire to secure by Letters Patent:

1. In combination with a counter having a rear wall and formed with a chamber adjacent the bottom thereof providing an undersurface, a device disposed within said chamber and attached to said undersurface for supporting a roll of paper, and a device attached to said rear wall comprising an angle-shaped member having a vertical portion attached to said rear wall and a portion inclined outwardly and downwardly from said rear wall, a roller rotatably mounted on said member, the strip of paper from said roll being adapted to be passed around said roller and between said roller and said portions.

2. In combination with a counter having a rear wall and formed with a chamber adjacent the bottom thereof providing an undersurface, a device disposed within said chamber and attached to said undersurface for supporting a roll of paper, and a device attached to said rear wall comprising an angle-shaped member having a vertical portion attached to said rear wall and a portion inclined outwardly and downwardly from said rear wall, a roller rotatably mounted on said member, the strip of paper from said roll being adapted to be passed around said roller and between said roller and said portions, and a second roller parallel to said first roller and mounted on said member, and said strip being received between said rollers.

ALEXANDER S. KATZ.