Aug. 16, 1938. B. F. FITCH 2,126,763

APPARATUS FOR TRANSFERRING FREIGHT CONTAINERS

Filed July 18, 1935 2 Sheets-Sheet 1

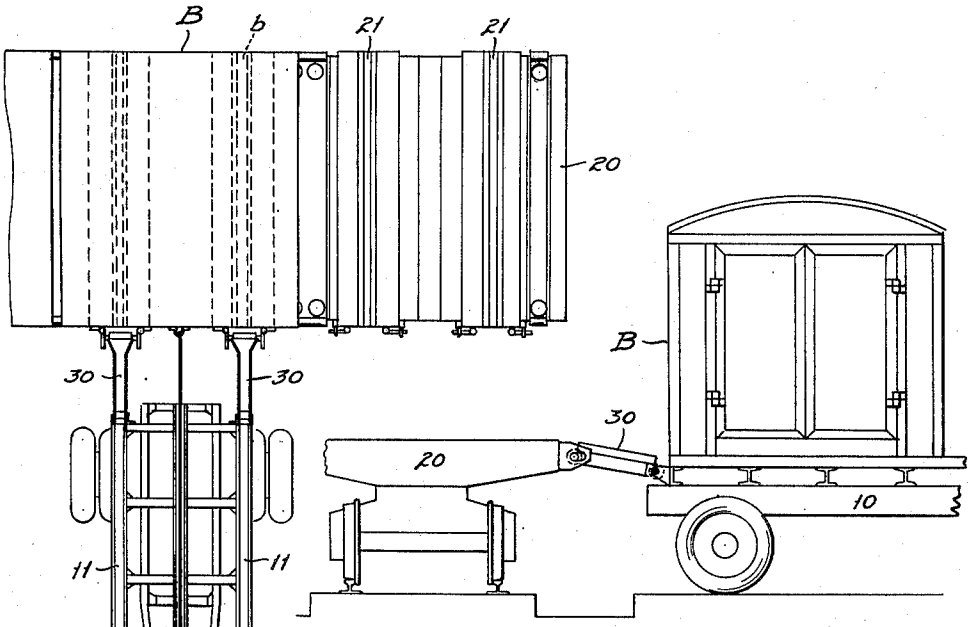

FIG. 3

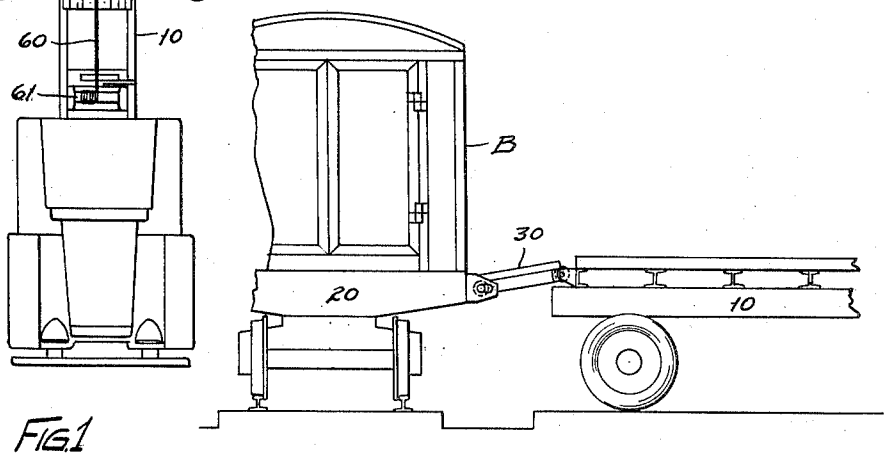

FIG. 1

FIG. 2

INVENTOR.
Benjamin F. Fitch,
BY
Bates, Golrick & Teare
ATTORNEYS.

Aug. 16, 1938. B. F. FITCH 2,126,763

APPARATUS FOR TRANSFERRING FREIGHT CONTAINERS

Filed July 18, 1935 2 Sheets-Sheet 2

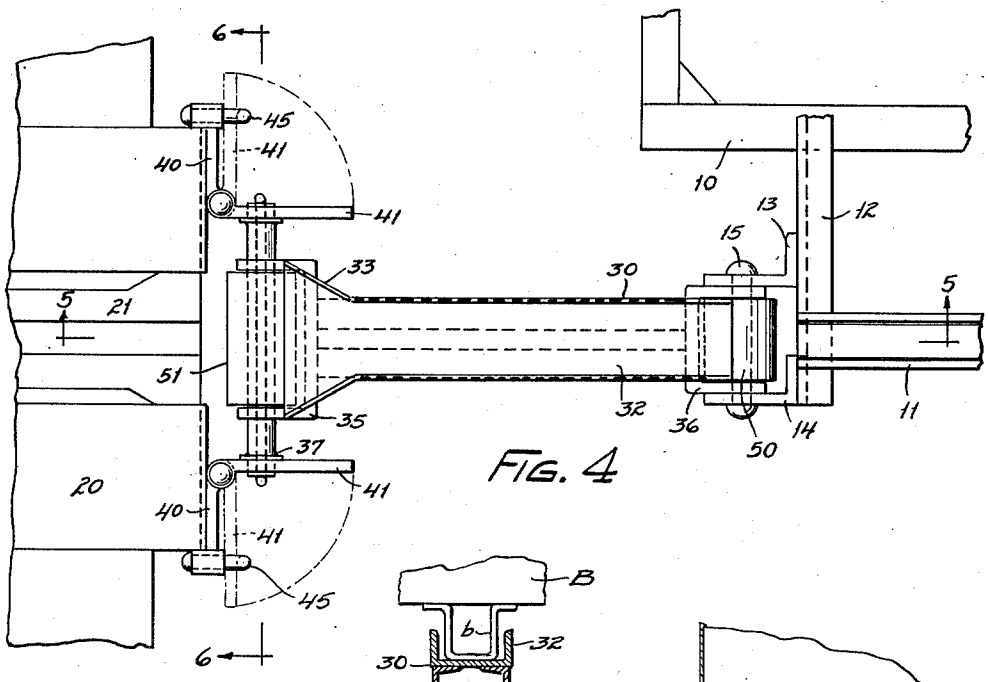

FIG. 4

FIG. 7

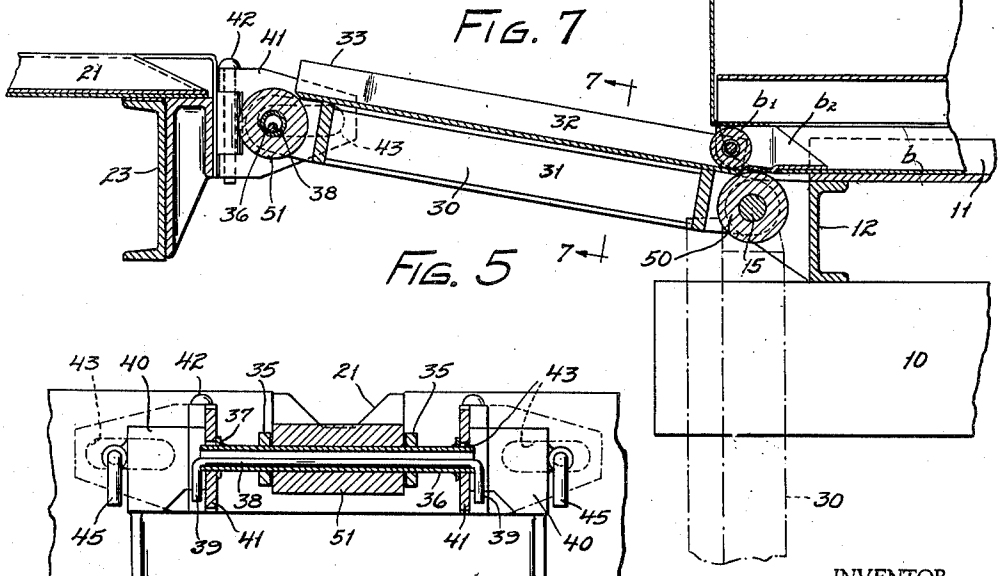

FIG. 5

FIG. 6

INVENTOR.
Benjamin F. Fitch,
BY Dates, Golrick & Teare,
ATTORNEYS.

Patented Aug. 16, 1938 2,126,763

UNITED STATES PATENT OFFICE

2,126,763

APPARATUS FOR TRANSFERRING FREIGHT CONTAINERS

Benjamin F. Fitch, Greenwich, Conn.

Application July 18, 1935, Serial No. 32,131

22 Claims. (Cl. 214—38)

This invention relates to a system of transferring package freight, wherein the packages are loaded into a transferable container, which may be carried by a highway truck or railway car and readily transferred from one to the other in a combined highway and rail haul. In effecting such transfer of a demountable body, I provide bridges temporarily connecting the truck to the railway car, the demountable body being adapted to be moved across such bridges from one vehicle to the other.

The present invention is concerned with the construction and operation of the bridges and the means for temporarily attaching them to one of the vehicles. I prefer to attach the bridges permanently and pivotally to the highway truck and then when the truck has been brought adjacent the side of the railway car to attach the other ends of the bridges to the car, whereby the body on the truck or car may be readily shifted across the bridges to the other vehicle.

My invention is hereinafter more fully described in connection with the embodiment thereof illustrated in the accompanying drawings, and the essential novel features are summarized in the claims.

In the drawings, Fig. 1 is a plan of a highway truck and a railway car connected by my bridges, the shiftable demountable body being illustrated in position on the car; Fig. 2 is a fragmentary elevation of the construction shown in Fig. 1; Fig. 3 is a view similar to Fig. 2, after the demountable body has been transferred from the car to the truck; Fig. 4 is a plan of one of the bridges connecting the truck with the railway car; Fig. 5 is a vertical section along such bridge, showing connected portions of the car and truck; Fig. 6 is a vertical section through the car anchorage device adjacent one end of the bridge, as indicated by the line 6—6 on Fig. 4; Fig. 7 is a cross-section of the bridge, as indicated by the line 7—7 on Fig. 5, but showing a portion of a demountable body resting thereon.

As shown in the drawings, 10 designates a suitable highway truck; 20 a railway car, and 30 a pair of bridges adapted to connect them. B is a demountable body or freight container adapted to be positioned on the truck or car and shifted from one to the other across the bridges.

As shown in Figs. 1, 4 and 5, the frame of the truck 10 carries two parallel longitudinal tracks 11 each comprising an upwardly facing channel beam. The demountable body B has on its under-side a pair of hollow rails *b* adapted to occupy the channel tracks when the body is on the truck. The car 20 has several pairs of channeled tracks 21 extending crosswise thereof and spaced corresponding with the spacing of the channels of the truck. Accordingly, several of the bodies may stand on the railway car with their rails engaging such channels, as indicated in plan at B in Fig. 1.

The bridges 30 are also upwardly facing channel members and are adapted to register with the channels of the truck and car, and thus form a continuous skidway from one vehicle to the other. As shown, the bridges are permanently pivoted to the truck, adjacent the rear end thereof, and are temporarily attached to the car by means comprised within this invention. This allows the bridges to depend idly at the rear of the truck when they are not in use for actual transfer of a container.

As shown in Figs. 4 and 5, the truck trackways 11 are mounted on transverse bolsters carried by the underframe of the truck 10. The endmost bolster 12 is a channel beam with its web vertical and its flanges facing inwardly. Secured to the outer face of the channel are a pair of brackets 13 and 14 in which is mounted a pin 15 extending through the bridge and thus pivoting it to the rear end of the truck. It will be seen that there is ample space at the rear of the endmost bolster in which the free bridges may depend vertically when not in use, without extending behind the rear of the truck frame.

Each bridge may be of the form illustrated in cross-section in Fig. 7, that is, there may be a pair of inwardly facing channel beams 31 to provide a base, and a surmounting channel beam 32 facing upwardly and forming the trackway. The vertical flanges of the beam 32 preferably flare outwardly at their extreme free end, as illustrated at 33, to enable the rails of the body to pass readily from the car into the channel 32, without requiring accurate registration.

Secured to the free end of the bridge base 31 is a U-shaped bracket 35 in which is mounted a horizontal tube 36 which is adapted to occupy supporting members carried by the car, as about to be explained.

Suitably secured to the car at the side thereof and adjacent the floor line are brackets 40 to which wings 41 are hinged by vertical pintles 42. The wings may fold parallel with the sides of the car, as indicated by broken lines in Fig. 4, but when in use extend out at right angles to the car, as shown in full lines in that figure. The wings have openings 43 in them and the end portions of the tube 36 are adapted to extend

into these openings, so that the wings support that end of the bridge.

Lying loosely in the tube 36 is a rod 38 having normally depending ends 39. When the bridge is to be connected to the brackets of the car, it is manually lifted until the tube 36 is at the same height as the openings 43 and then the wings are swung over the ends of the tube. During such movement the rod ends 39 are temporarily lifted into a horizontal position, and thus pass readily through the opening 43, which are in the form of horizontal slots. When the tube is in the slots, as indicated in Fig. 6, the release of the rod 38 allows the ends to drop down by gravity, overhanging the face of the wings 41, and thus preventing separation of the parts. The tube 36 may be formed with annular shoulders 37 limiting the movement of the wings toward each other. In this position, therefore, the bridge is effectively secured to the car side though the slots allow limited movement of the bridge toward and from the side.

The two brackets 40 may be independent members bolted or otherwise secured to the car side, or they may be formed by parts of an integral plate secured to it. I have indicated these brackets as webbed castings secured to the side sill 23 of the car adjacent the overhanging portions of the car floor. When the bridges are not attached to the car, the wings 41 fold in parallel to the side of the car and are there held by suitable L-shaped rods 45 journalled in the side brackets 40 and adapted when their end portions are horizontal to pass through the slots 43, such end portions thereafter depending by gravity, as shown in Fig. 6 to hold the wings effectively against the sides of the car, and thus out of the way.

It will be seen that the anchorage device attached to the car enables the wings 41 to be folded back into idle position without extending beyond the over-all lateral dimension of the car defined by the usual stake pockets along the sides. They are, however, available whenever desired from the temporary attachment of the bridges to enable the transfer of a body to or from the car.

As the body is supported by its skid rails *b* in the upwardly facing channels of the truck or car, such channels may readily carry grease to expedite the sliding action. I find it desirable, however, to provide rollers where the rail of the body first encounters the bridge, particularly when the bridge inclines upwardly from the vehicle carrying the body. I readily accomplish this by mounting a roller 50 on the pin 15, pivoting the bridge to the truck, and another roller 51 on a tube 36. The roller 50 is between the arms of a bracket 36 forming part of the pivoted end of the bridge and the roller 51 between the arms of the bracket 35 at the free end of the bridge. These rollers therefore have their uppermost surface in the direct region between the truck channel and the bridge channel and between the bridge channel and the car channel.

Fig. 2 illustrates the loaded body on the car while the trackway on the empty truck is slightly higher, so that the bridge inclines upwardly from the car to the truck. In such position the roller 51 is an advantage as the body passes from the car to the bridge. On the other hand, Fig. 3 shows the loaded body on the truck, causing the truck to lie lower than the car floor, so that the bridge inclines upwardly from the truck, and in this case the roller 50 is useful in aiding the passage of the body from a truck to the bridge.

If desired, I may mount on the body itself suitable guiding rollers, as indicated at *b1* in Fig. 5. These rollers when used are at the extreme end of the body rails and have their lowermost portion above the bottom plane of those rails so that when the body stands horizontally the rollers are out of contact with the supporting vehicle. This end roller, however, comes into play when the body engages the upwardly inclined bridge, as shown in Fig. 5. These rollers may be readily carried by suitable brackets *b2* in which the rollers are journalled, and which seat in the end portions of the hollow rails *b*.

Any suitable means may be employed for supplying power sufficient to move the body along the tracks from one vehicle to the other. In Fig. 1, I have illustrated a cable 60 attached at one end to the body B and having the other end pass around a suitable winch 61 carried by the truck and preferably operated by the power of the truck. Such cable may effectively pull the body from the car across the bridges onto the truck. Or, when the body is on the truck, the cable may pass to the far side of the car and about a sheave located at such side, and thence back to the body, in which case the winding in of the cable by the winch will pull the body from the truck across the bridges onto the car.

My system of transportation enables a loaded body to be brought by a truck into the vicinity of a suitably equipped flat car, the truck standing on any convenient support adjacent the side of the car. Then the bridges may be readily coupled to the side of the car and the power mechanism operated to skid the body from the truck across the bridges onto the car, or the reverse operation may carry the body from the car onto the truck for highway transportation.

Attention is called to the fact that the horizontally slotted openings 43 in the wings 41 enable very easy attachment of the free end of the bridge to the car without requiring accurate positioning of the truck and bridge. This slotted connection is also of value in allowing automatic adjustment of the bridge to the car as the connection sinks during the travel of the body thereover. Experience has shown that by reason of springs on the truck and the car, there is a tendency for the rear end of the truck to rise as the body passes off of it, and for the car floor to lower as the body passes onto it, and for the reverse action to take place as the body moves from the car to the truck, so that the floor of the bridge channel becomes practically aligned with the floors of the truck channels and car channels, and the slotted connection enables the bridge more readily to take such changing position.

While I have shown the bridges pivoted to the rear end of the truck, which backs up to the car side, such bridges might be pivoted to the side of a truck equipped with transverse trackways, the outer ends of the bridges being attached to the car side by the slotted wings herein described.

I claim:

1. The combination of a railway car equipped with a pair of trackways, a highway truck equipped with a correspondingly positioned pair of trackways, and a pair of independent bridges connected to one of the vehicles, and foldable means on the other vehicles adapted to support the free ends of the bridges, whereby a continuous skidway is formed from the tracks of the truck to the tracks of the car.

2. The combination of a railway car and a

highway truck, a bridge pivotally carried by the truck, and means foldably mounted at the car side adapted to project to support the bridge or be folded when not in use.

3. The combination of a pair of vehicles, of a bridge adapted to connect them, said bridge being pivoted to one of the vehicles, a pair of folding wings secured to the other vehicle, said wings being adapted to engage and support the free end of the bridge.

4. The combination of a pair of vehicles, a bridge pivoted to one of them, a cross member carried by the bridge near the free end, a pair of wings pivoted to the other vehicle and having openings adapted to be occupied by the cross member of the bridge when the wings extend away from the vehicle carrying them.

5. The combination of a truck having a pair of parallel trackways, a pair of bridge rails pivoted to the truck and adapted to substantially align with said trackways, cross members carried by the bridge rails adjacent their free ends, and movable members mounted independently of the bridge on a supporting device, said members having openings to receive the projecting ends of the cross members.

6. The combination of a truck having a pair of parallel longitudinal trackways, a pair of bridge rails pivoted to the truck at the rear ends of such trackways and adapted to depend idly or to substantially align with the trackways, a railway car having transverse trackways adapted to register with the bridge rails, cross members carried by the bridge rails adjacent their free ends and folding wings carried by the railway car and provided with openings adapted to receive the projecting ends of the cross members.

7. The combination with a vehicle having a pair of foldable wings with slots in them, a bridge independent of the vehicle but attachable thereto, said bridge having a cross member adapted to occupy such slots, and means for temporarily anchoring the cross member to the wings.

8. The combination of a railway car, a pair of wings hinged to the side thereof and adapted to extend outwardly or be folded parallel with the side, said wings having slots to receive a supporting member of a bridge, and rods carried by the car side and having bent ends adapted to pass through the slots when the wings are folded, and thereafter depend on the outer side thereof to hold the wings against the car side.

9. The combination of a pair of vehicles and a bridge adapted to be attached to each of them, said bridge being pivoted to one of the vehicles and a roller surrounding the pivotal axis and adapted to coact with a member in passing from the vehicle to the bridge.

10. The combination of a highway truck having a trackway, a bridge rail pivoted in registration with the trackway by a horizontal pivot pin and a roller mounted on said pivot pin and having its uppermost portion extending into the space between the truck trackway and the bridge.

11. The combination of a vehicle having a track, a bridge rail pivotally carried by the vehicle and having a track adapted to register with the vehicle track, means for attaching the free end of the bridge to a suitable support, and a roller carried by the bridge adjacent its free end, disposed for the most part below the bridge rail track and adapted to occupy the space between the bridge rail track and such support.

12. The combination of a highway truck having a trackway thereon, a bridge trackway pivoted to the truck in registration with the trackway thereof, said bridge trackway being adapted to depend idly or extent out as a substantial continuation of the truck trackway, means for supporting the far end of the bridge in such extended position, and rollers at the inner and outer ends of the bridge and disposed for the most part below the bridge trackway surface to facilitate movement of a body onto the bridge from either direction.

13. The combination of a highway truck having a pair of longitudinal trackways thereon, a pair of bridge trackways pivoted to the rear end of the truck in registration with the trackways thereof, said bridge trackways being adapted to extend out as a substantial continuation of the truck trackway, a railway car having transverse trackways and means adjacent the end thereof for detachably supporting the far ends of the bridges in such extended position, and rollers at the inner and outer ends of the bridge to facilitate movement of a body onto the bridge from the truck or car.

14. The combination of a highway truck having an upwardly facing channel shaped trackway, a bridge rail having a base portion and a channel-shaped trackway at the top thereof, overlapping ears on the highway truck and bridge rail connected by a pin to pivot the bridge to a truck, a roller surrounding said pin and having its uppermost portion extending into the space between the channels of the truck and bridge, and means for supporting the far end of the bridge.

15. The combination of a vehicle, a movable bridge pivoted to one edge of the vehicle on a horizontal axis, a second vehicle, a wing pivoted to the second vehicle on a vertical axis, and means for attaching the free end of the bridge to said wing.

16. The combination of a vehicle, a movable bridge pivoted to one edge of the vehicle on a horizontal axis, a second vehicle, a pair of wings pivoted to the second vehicle on vertical axes, and means projecting laterally from the bridge adjacent its free end for connecting it to said wings.

17. A railway car having pairs of channels arranged crosswise of the car and pairs of wings pivoted to the side of the railway car, one pair for each channel, whereby the wings when not in use may fold against the car side, said wings being adapted to support the free ends of bridges carried by highway trucks.

18. The combination of a highway truck having a pair of parallel guiding channels extending lengthwise of the truck, a pair of bridges pivoted to the rear end of the truck on horizontal axes and adapted to substantially align with the channels of the truck, a railway car having pairs of channels arranged crosswise of the car and spaced in correspondence with the channels of the highway truck, pairs of wings pivoted to the side of the railway car adjacent the ends of the respective channels, whereby the wings when not in use may fold against the car side, said wings having openings through them, and cross rods carried by the bridges adjacent their free ends and adapted to occupy said openings when the wings are folded out from the car side.

19. The combination of a truck having a trackway, a bridge pivoted to the truck and having a trackway adapted to register with the trackway of the truck, a cross member carried by the bridge adjacent its free end, a pair of wings, means to pivotally support the wings independently of the

bridge and truck, said wings having openings adapted to be occupied by said cross member.

20. The combination of a vehicle having a trackway thereon, of a pair of wings pivotally carried by the vehicle adjacent the side thereof and adapted to move laterally, said wings having substantially horizontal slots, and a bridge associable with the vehicle in a manner to carry a load therefrom or thereto, said bridge having a transverse member adapted to occupy such slots.

21. The combination of a support having a pair of wings adapted to be swung outwardly, a bridge independent of the support but attachable thereto, said bridge having a transverse tube adapted to occupy slots in the wings, and a rod occupying the tube having bent ends adapted to pass through the slots and thereafter depend on the outer sides of the wings.

22. In the art of transferring freight wherein a highway truck and a railway car support corresponding tracks with a bridge carried by one of such vehicles and adapted to be secured to the other to form an intermediate connection for such tracks, in combination with a demountable body having a base rail adapted to occupy the trackway of the truck, car or bridge, said body having a roller adjacent the end of its base rail, with its lowermost portion above the bottom plane of the base rail, whereby the roller engages the bridge only in case the same is inclined.

BENJAMIN F. FITCH.